LOADING PATTERN MATING SIDE

	01				05				10						15				20				25	
f	0	0	0	0	0	0	0	0	0	0	0				0	0	0	0	0	0	0	0	0	0
e	7	7	7	7	7	7	7	7	7	7	7				7	7	7	7	7	7	7	7	7	7
d	7	7	7	7	7	7	7	7	7	7	7				7	7	7	7	7	7	7	7	7	7
c	7	7	7	7	7	7	7	7	7	7	7				7	7	7	7	7	7	7	7	7	7
b	7	7	7	7	7	7	7	7	7	7	7				7	7	7	7	7	7	7	7	7	7
a	7	7	7	7	7	7	7	7	7	7	7				7	7	7	7	7	7	7	7	7	7
z	0	0	0	0	0	0	0	0	0	0	0				0	0	0	0	0	0	0	0	0	0

LOADED CONNECTOR ASSEMBLY
(FOR EXAMPLE)

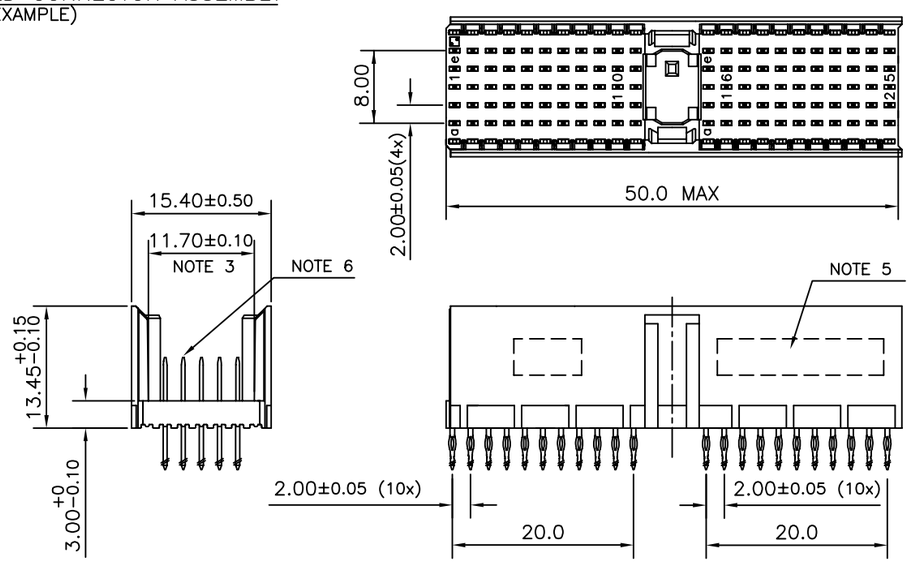

CONTACT OVERVIEW

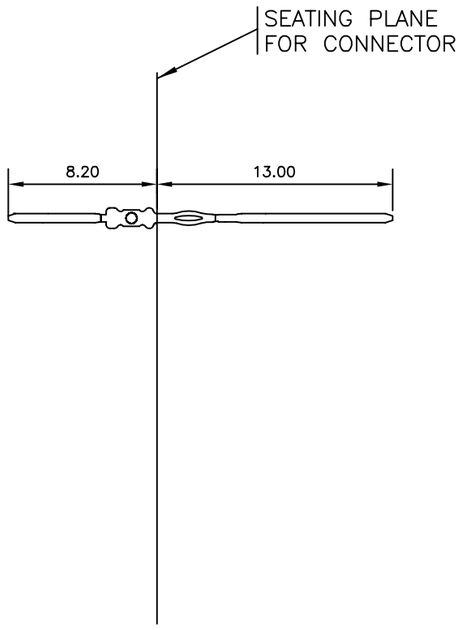

LAY-OUT P.C.B.-HOLE

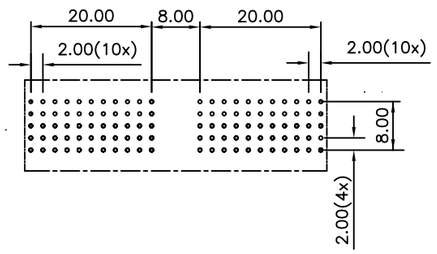

HM2P40PK5110----

LEAD FREE INDICATOR : LF = LEAD FREE
(DIGIT 15 & 16)

PLATING CODE (DIGIT 13 AND 14)
(REF DRW NO. BS,C , 201844 , 003)

NOTES

1. THIS PRODUCT IS CSA APPROVED.
2. THIS PRODUCT IS UL RECOGNIZED.
3. MEASURED AT THE BOTTOM.
4. MATERIAL CONTACT: PHOSPHORBRONZE
   HOUSING: CREAM WHITE GLASS FILLED POLYESTER UL-94V0
5. CONNECTOR PRINTED WITH P/N AND DATE CODE.
6. FOR ACTUAL CONTACT LOADINGS, SEE LOADING PATTERN MATING SIDE.
7. SHAPE OF CONNECTOR HOUSING CAN ALTER DEPENDING ON PRODUCTION LOCATION
8. THE PRODUCT (LF) MEETS EUROPEAN UNION DIRECTIVES AND OTHER COUNTRY REGULATIONS AS DESCRIBED IN GS-22-008
9. FOR RECOMMENDED PTH DIMENSIONS REFER DRAWING : BS, A , 201572 , 001

CATALOG NO: HM2P40PK5110----

ltr	ecn no	dr	date
A	105-0179	MINI	2005-10-03
B	106-0099	MINI	2006-07-15

mat'l. code	SEE NOTE 4	
surface	ISO 1302	
tolerance	ISO 406 ISO 1101	
tolerances unless otherwise specified	angles 0°±1°	linear .0±0.2 / .00±0.1
projection		
MM		
scale	–	
dr	MINI K VANDANATH	2005-10-03
engr	BIJU K PAUL	2005-10-03
chr	BIJU K PAUL	2006-07-15
appd	BIJU K PAUL	2006-07-15
product family	MILLIPACS	
title	MPACS 5+2R STR HDR PF CONN TYPE A NO PEG	
dwg no	BS, C ,203028, 292	sheet 1 of 1
size	A3	
type	Product Customer Drawing	
sheet index	revision B / sheet 1	

form: A3

PDM: Rev:B STATUS:Released Printed: Dec 03, 2007

FCIconnect.com
Copyright FCI