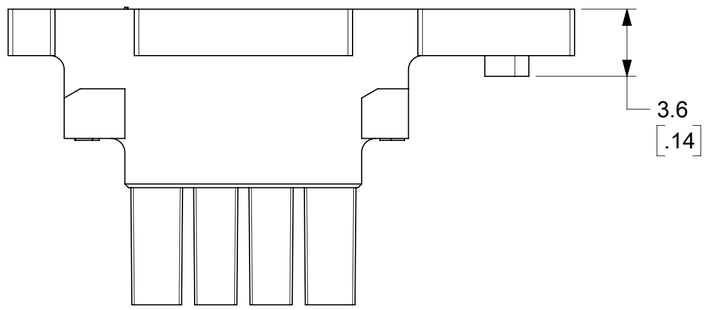


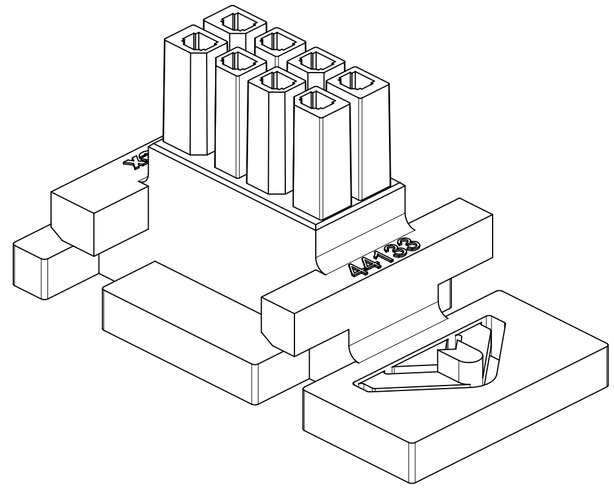


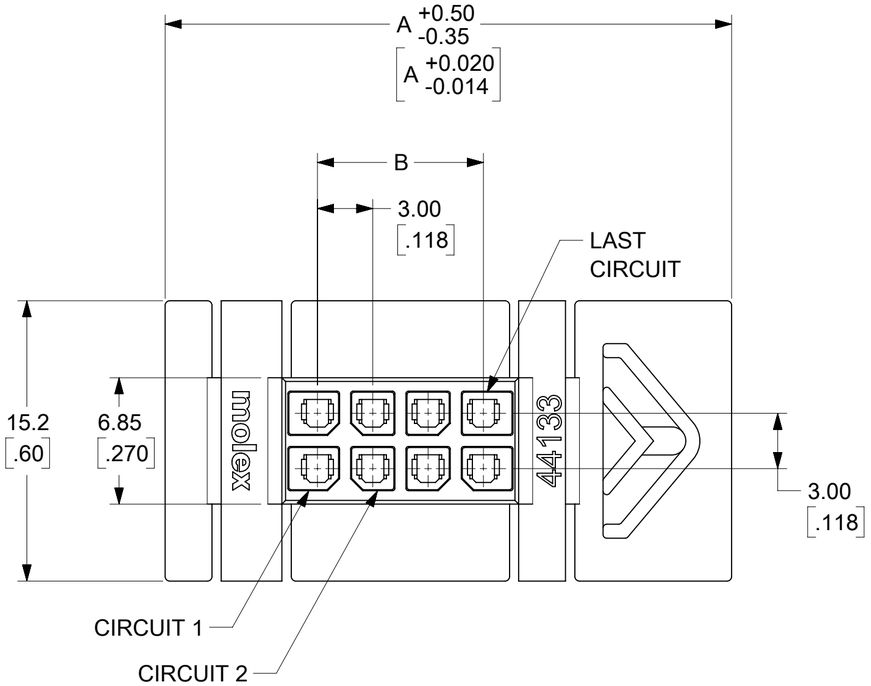


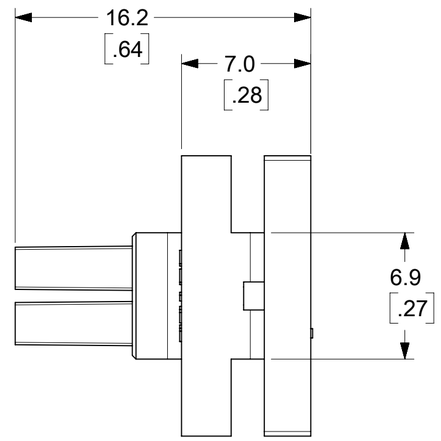


| CIRCUIT SIZE | MATERIAL NUMBER | DIM "A" | DIM "B" |
|---|---|---|---|
| 4 | 44133-0408 | 24.6 / .97 | 3.00 / .118 |
| 6 | 44133-0608 | 27.7 / 1.09 | 6.00 / .236 |
| 8 | 44133-0808 | 30.7 / 1.21 | 9.00 / .354 |
| 10 | 44133-1008 | 33.8 / 1.33 | 12.00 / .472 |
| 12 | 44133-1208 | 36.8 / 1.45 | 15.00 / .591 |
| 14 | 44133-1408 | 39.8 / 1.57 | 18.00 / .709 |
| 16 | 44133-1608 | 42.8 / 1.69 | 21.00 / .827 |
| 18 | 44133-1808 | 45.8 / 1.80 | 24.00 / .945 |
| 20 | | 48.8 / 1.92 | 27.00 / 1.063 |
| 22 | | 51.8 / 2.04 | 30.00 / 1.181 |
| 24 | | 54.8 / 2.16 | 33.00 / 1.299 |

NOTES:
1. MATERIAL: UNFILLED NYLON, UL94V-0, COLOR: BLACK
2. FINISH: N/A
3. PRODUCT SPECIFICATION: PS-44300-001
4. PACKAGING SPECIFICATION: TRAY PACKED PER PK-44133-002
5. THIS RECEPTACLE MATES WITH MOLEX BMI PLUG 44300, MOLEX BMI VERTICAL PCB HEADER 44432, MOLEX BMI RIGHT ANGLE PCB HEADER 44428, & MOLEX BMI CPI VERTICAL PCB HEADER 45280.
6. THIS RECEPTACLE TO BE USED WITH MOLEX FEMALE CRIMP TERMINALS ONLY (SERIES 43030, 45773, OR 46235). SEE SECTION "A"-"A" FOR TERMINAL ORIENTATION IN HOUSING.
7. THIS RECEPTACLE IS DESIGNED FOR USE WITH 1.52/.060 MAX. TO 1.27/.050 MINIMUM THICK PANELS.
8. DIMENSIONS GIVEN ACROSS CENTERLINES ARE SYMMETRICAL ABOUT THOSE CENTERLINES WITHIN THE TOTAL TOLERANCE.
9. WHEN MATING WITH 44300 SERIES, THE PANEL CUT-OUT CENTERLINES OF DIM "H" AND 9.78/.385 MUST ALIGN WITH POINT "M" DEFINED BY MOLEX DRAWING SD-44300-001.
10. MOLEX RECOMMENDS THE USE OF MICRO-FIT TEST PLUG (SERIES 44242) WHENEVER CONTINUITY TESTING IS PERFORMED. TEST PLUGS MUST NOT BE USED TO MAKE OR BREAK UNDER LOAD. MOLEX DOES NOT RECOMMEND USING STANDARD MATING COMPONENTS (SERIES 44428, 44432, 44300 OR 45280) FOR HARNESS TESTING PURPOSES.
11. THIS PART CONFORMS TO CLASS 'B' REQUIREMENTS OF COSMETIC SPECIFICATION PS-45499-002. HOUSINGS MAY EXHIBIT A SURFACE IMPERFECTION KNOW AS "SINK MARKS" UP TO (0.60)/.024 MAX. THIS IS A COSMETIC DEFECT AND DOES NOT AFFECT FUNCTION OF THE CONNECTOR.
12. THE WIDTH OF THE NARROW SLOTS SHOULD BE 2.90-3.28/.114-.129 (MIN-MAX) IF KEYING OF THE CONNECTOR TO THE CUT-OUT IS DESIRED.

| DOCUMENT STATUS | P1 | RELEASE DATE | 2021/07/19 04:24:14 |
|---|---|---|---|

FUNCTIONAL SYMBOLS: FA = 0, FC = 0, FP = 0
DIVISIONAL SYMBOLS

THIS DRAWING CONTAINS INFORMATION THAT IS PROPRIETARY TO MOLEX ELECTRONIC TECHNOLOGIES, LLC AND SHOULD NOT BE USED WITHOUT WRITTEN PERMISSION

DIMENSION UNITS: MM/INCH
SCALE: NTS

GENERAL TOLERANCES (UNLESS SPECIFIED)

| | MM | INCH |
|---|---|---|
| 4 PLACES | ± | ± |
| 3 PLACES | ± | ± 0.01 |
| 2 PLACES | ± 0.25 | ± 0.014 |
| 1 PLACE | ± 0.35 | ± |
| 0 PLACES | ± | ± |
| ANGULAR TOL | ± 0.5 ° | |

DRAFT WHERE APPLICABLE MUST REMAIN WITHIN DIMENSIONS

CURRENT REV DESC: ADD KEEPOUT AREA

EC NO: 660931
DRWN: MKIPPER 2021/04/09
CHK'D: JEHRISMAN 2021/07/16
APPR: FSMITH 2021/07/19

INITIAL REVISION:
DRWN: GAVERILL 2008/08/11
APPR: FSMITH 2008/08/22

THIRD ANGLE PROJECTION | DRAWING: C-SIZE | SERIES: 44133

molex

MICRO-FIT (3.0)
BMI FLOATING PANEL RECEPTACLE,
HALOGEN-FREE

PRODUCT CUSTOMER DRAWING

| DOCUMENT NUMBER | DOC TYPE | DOC PART | REVISION |
|---|---|---|---|
| SD-44133-003 | PSD | 001 | B5 |

| MATERIAL NUMBER | CUSTOMER | SHEET NUMBER |
|---|---|---|
| | GENERAL MARKET | 1 OF 2 |

FORMAT: Eng-tega-master-tb-prod-C
REVISION: E
DATE: 2020/01/4

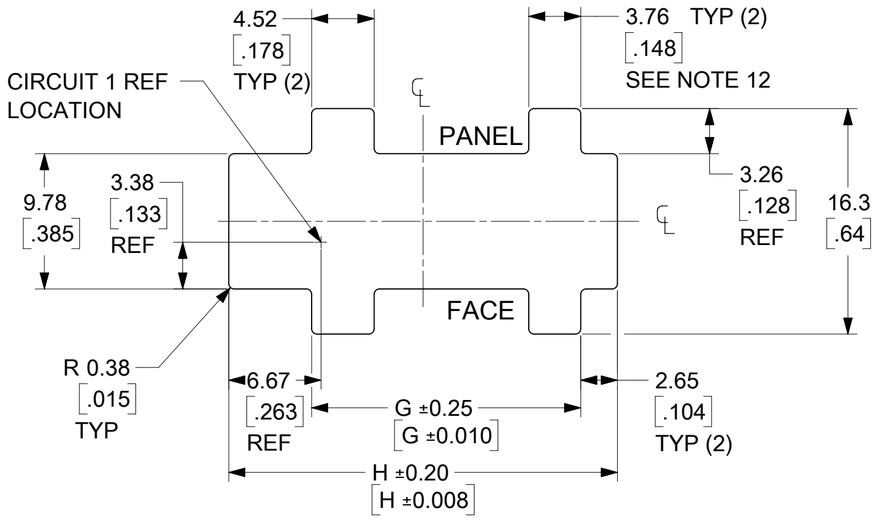


RECOMMENDED PANEL CUTOUT

(SEE NOTES 7, 9, AND 12)

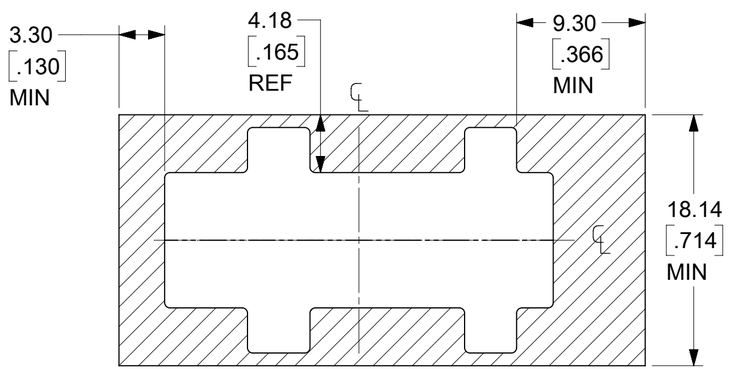


KEEPOUT AREA

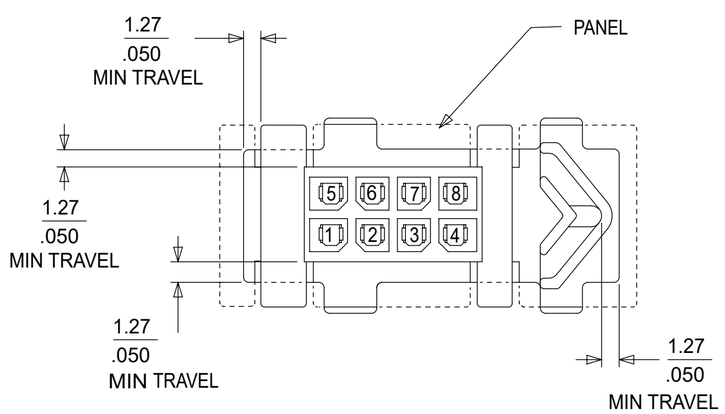


RECEPTACLE SHOWN MOUNTED IN PANEL

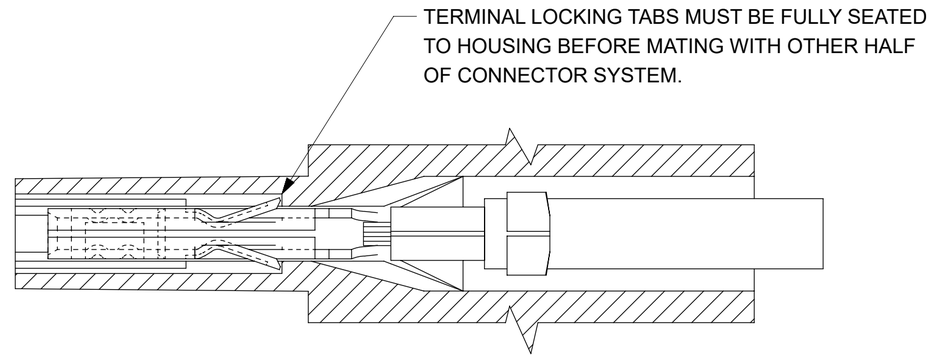


SECTION "B"-"B"

(SCALE 10:1)

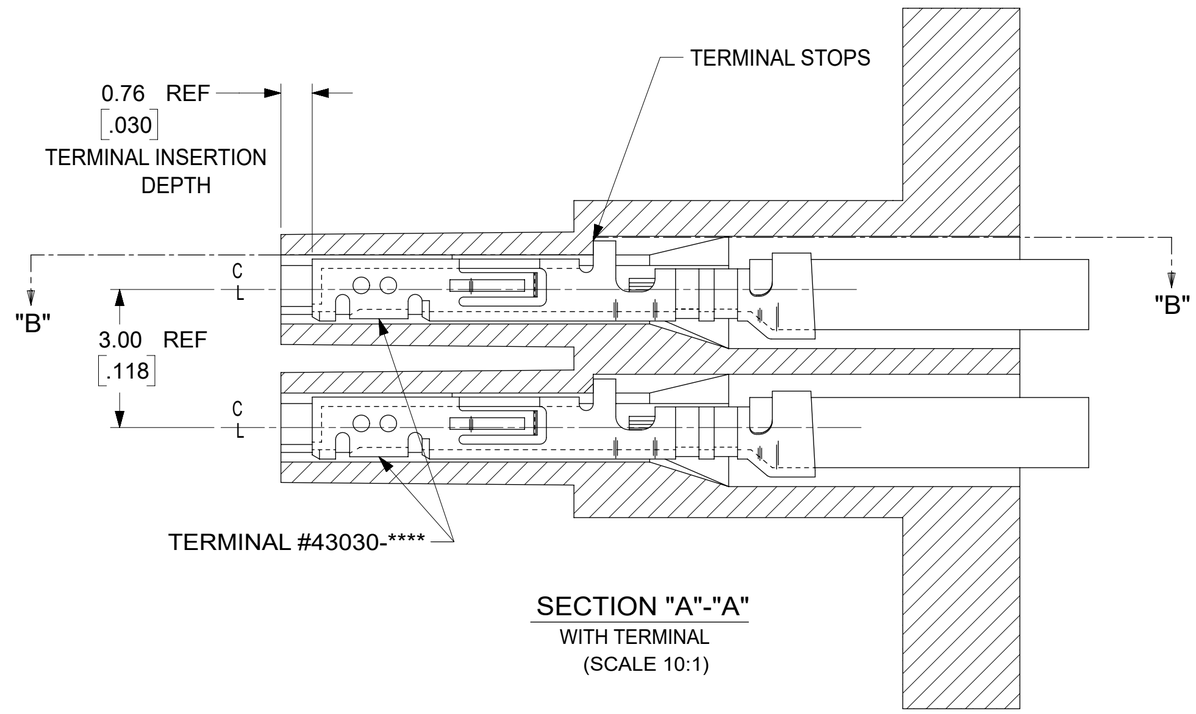


SECTION "A"-"A"

WITH TERMINAL

(SCALE 10:1)

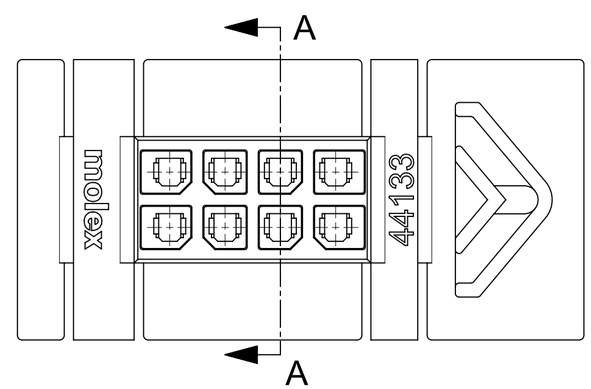


| CIRCUIT SIZE | DIM "G" | DIM "H" |
|---|---|---|
| 4 | 13.46 / .530 | 22.10 / .870 |
| 6 | 16.46 / .648 | 25.10 / .988 |
| 8 | 19.46 / .766 | 28.10 / 1.106 |
| 10 | 22.46 / .884 | 31.10 / 1.224 |
| 12 | 25.46 / 1.002 | 34.10 / 1.343 |
| 14 | 28.46 / 1.120 | 37.10 / 1.461 |
| 16 | 31.46 / 1.239 | 40.10 / 1.579 |
| 18 | 34.46 / 1.357 | 43.10 / 1.697 |
| 20 | 37.46 / 1.475 | 46.10 / 1.815 |
| 22 | 40.46 / 1.593 | 49.10 / 1.933 |
| 24 | 43.46 / 1.711 | 52.10 / 2.051 |

THIS DRAWING CONTAINS INFORMATION THAT IS PROPRIETARY TO MOLEX ELECTRONIC TECHNOLOGIES, LLC AND SHOULD NOT BE USED WITHOUT WRITTEN PERMISSION

FUNCTIONAL SYMBOLS: FA = 0, FC = 0, FP = 0

DIVISIONAL SYMBOLS

DIMENSION UNITS: MM/INCH

SCALE: NTS

GENERAL TOLERANCES (UNLESS SPECIFIED)

| | MM | INCH |
|---|---|---|
| 4 PLACES | ± | ± |
| 3 PLACES | ± | ± 0.01 |
| 2 PLACES | ± 0.25 | ± 0.014 |
| 1 PLACE | ± 0.35 | ± |
| 0 PLACES | ± | ± |
| ANGULAR TOL | ± 0.5 ° | |

DRAFT WHERE APPLICABLE MUST REMAIN WITHIN DIMENSIONS

CURRENT REV DESC: ADD KEEPOUT AREA

EC NO: 660931

DRWN: MKIPPER 2021/04/09

CHK'D: JEHRISMAN 2021/07/16

APPR: FSMITH 2021/07/19

INITIAL REVISION:

DRWN: GAVERILL 2008/08/11

APPR: FSMITH 2008/08/22

THIRD ANGLE PROJECTION

DRAWING: C-SIZE

SERIES: 44133

molex

MICRO-FIT (3.0)
BMI FLOATING PANEL RECEPTACLE,
HALOGEN-FREE

PRODUCT CUSTOMER DRAWING

| DOCUMENT NUMBER | DOC TYPE | DOC PART | REVISION |
|---|---|---|---|
| SD-44133-003 | PSD | 001 | B5 |

MATERIAL NUMBER

CUSTOMER: GENERAL MARKET

SHEET NUMBER: 2 OF 2

| DOCUMENT STATUS | P1 | RELEASE DATE | 2021/07/19 04:24:14 |
|---|---|---|---|

FORMAT: Eng-lega-master-tb-prod-C
REVISION: B
DATE: 2020/11/4