THCV215/216-8LANE Evaluation Kits

SerDes transmitter and receiver evaluation board

1. General Discription

THCV215/216-8LANE Evaluation Kits are designed to evaluete THCV215 and THCV216 for transmission of video data.

Each has four THCV215's or four THCV216's.

This kits can transmit video data of “Full-HD / 240 Hz / 30 bit” and “4Kx2K / 60 Hz / 30 bit”.

The supply voltage range are “3.0V to 3.6V” or “5.0V to 12.0V”.

2. Block Diagram

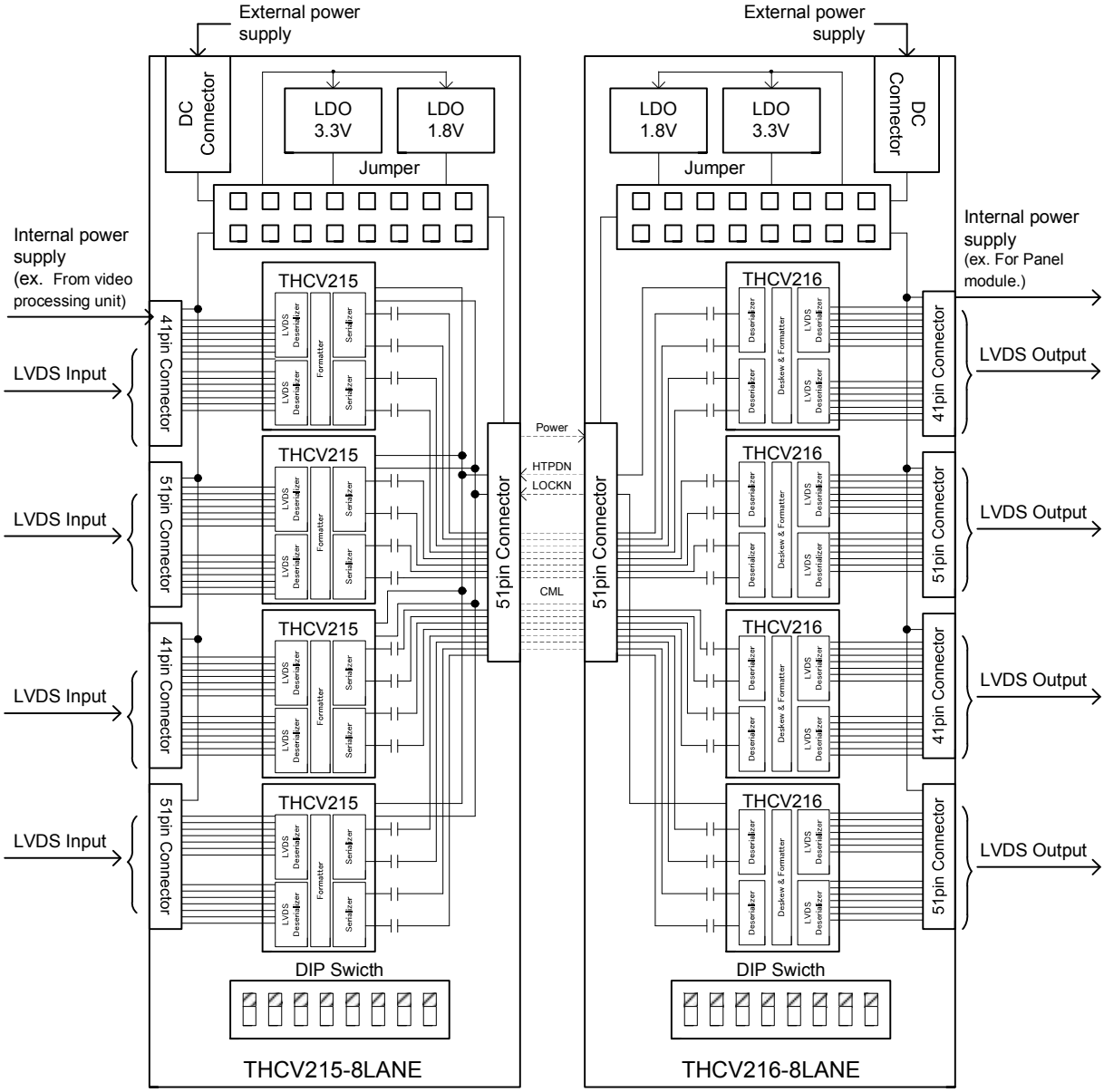

Figure 2-1. Block Diagram

THCV215/216-8LANE Evaluation Kits

SerDes transmitter and receiver evaluation board

3. Connector

This chapter shows the connector to connect the THCV215 and THCV216.

Table 3-1. Pin assignments of LVDS connector (41 pin)

THCV215 CN101 & CN301		Descriptions	THCV216 CN102 & CN104	
Pin No.	Symbol		Symbol	Pin No.
1	Vcc	Supply voltage from video processing unit, And for Panel module (Internal Supply)	Vcc	41
2				40
3				39
4				38
5				37
6	NC	Non Connected	NC	36
7	GND	Ground	GND	35
8				34
9				33
10	TLA0-	LVDS data input/output	RLA0-	32
11	TLA0+		RLA0+	31
12	TLB0-		RLB0-	30
13	TLB0+		RLB0+	29
14	TLC0-		RLC0-	28
15	TLC0+		RLC0+	27
16	GND	Ground	GND	26
17	TLCLK0-	LVDS clock input/output	RLCLK0-	25
18	TLCLK0+		RLCLK0+	24
19	GND	Ground	GND	23
20	TLD0-	LVDS data input/output	RLD0-	22
21	TLD0+		RLD0+	21
22	TLE0-		RLE0-	20
23	TLE0+		RLE0+	19
24	GND	Ground	GND	18
25	TLA1-	LVDS data input/output	RLA1-	17
26	TLA1+		RLA1+	16
27	TLB1-		RLB1-	15
28	TLB1+		RLB1+	14
29	TLC1-		RLC1-	13
30	TLC1+		RLC1+	12
31	GND	Ground	GND	11
32	TLCLK1-	LVDS clock input/output	RLCLK1-	10
33	TLCLK1+		RLCLK1+	9
34	GND	Ground	GND	8
35	TLD1-	LVDS data input/output	RLD1-	7
36	TLD1+		RLD1+	6
37	TLE1-		RLE1-	5
38	TLE1+		RLE1+	4
39	GND	Ground	GND	3
40	NC	Non Connected	NC	2
41				1

Table 3-2. Pin assignments of LVDS connector (51 pin)

THCV215 CN201 & CN401		Descriptions	THCV216 CN103 & CN105	
Pin No.	Symbol		Symbol	Pin No.
1	Vcc	Supply voltage from video processing unit, And for Panel module (Internal Supply)	Vcc	51
2				50
3				49
4				48
5				47
6	NC	Non Connected	NC	46
7	GND	Ground	GND	45
8				44
9				43
10	TLA0-	LVDS data input/output	RLA0-	42
11	TLA0+		RLA0+	41
12	TLB0-		RLB0-	40
13	TLB0+		RLB0+	39
14	TLC0-		RLC0-	38
15	TLC0+		RLC0+	37
16	GND	Ground	GND	36
17	TLCLK0-	LVDS clock input/output	RLCLK0-	35
18	TLCLK0+		RLCLK0+	34
19	GND	Ground	GND	33
20	TLD0-	LVDS data input/output	RLD0-	32
21	TLD0+		RLD0+	31
22	TLE0-		RLE0-	30
23	TLE0+		RLE0+	29
24	GND	Ground	GND	28
25	TLA1-	LVDS data input/output	RLA1-	27
26	TLA1+		RLA1+	26
27	TLB1-		RLB1-	25
28	TLB1+		RLB1+	24
29	TLC1-		RLC1-	23
30	TLC1+		RLC1+	22
31	GND	Ground	GND	21
32	TLCLK1-	LVDS clock input/output	RLCLK1-	20
33	TLCLK1+		RLCLK1+	19
34	GND	Ground	GND	18
35	TLD1-	LVDS data input/output	RLD1-	17
36	TLD1+		RLD1+	16
37	TLE1-		RLE1-	15
38	TLE1+		RLE1+	14
39	GND	Ground	GND	13
40	NC	Non Connected	NC	12
41				11
42				10
43				9
44				8
45				7
46				6
47				5
48				4
49				3
50				2
51				1

THCV215/216-8LANE Evaluation Kits

SerDes transmitter and receiver evaluation board

3. Connector and Cable (Continued)

Table 3-3. Pin assignments of CML connector
(51 pin)

THCV215_CN501		Descriptions	THCV216_CN101	
Pin No.	Symbol		Symbol	Pin No.
51	Vcc	Supply voltage from THCV215 to THCV216	Vcc	1
50				2
49				3
48				4
47				5
46				6
45				7
44				8
43				9
42				10
41	GND	Ground	GND	11
40				12
39				13
38				14
37				15
36	HTPDN	Hot plug detect	HTPDN	16
35	LOCKN	Lock detect	LOCKN	17
34	GND	Ground	GND	18
33	Tx0n	V-by-One® HS Channel 0 (CML)	Rx0n	19
32	Tx0p		Rx0p	20
31	GND	Ground	GND	21
30	GND		GND	22
29	Tx1n	V-by-One® HS Channel 1 (CML)	Rx1n	23
28	Tx1p		Rx1p	24
27	GND	Ground	GND	25
26	GND		GND	26
25	Tx2n	V-by-One® HS Channel 2 (CML)	Rx2n	27
24	Tx2p		Rx2p	28
23	GND	Ground	GND	29
22	GND		GND	30
21	Tx3n	V-by-One® HS Channel 3 (CML)	Rx3n	31
20	Tx3p		Rx3p	32
19	GND	Ground	GND	33
18	GND		GND	34
17	Tx4n	V-by-One® HS Channel 4 (CML)	Rx4n	35
16	Tx4p		Rx4p	36
15	GND	Ground	GND	37
14	GND		GND	38
13	Tx5n	V-by-One® HS Channel 5 (CML)	Rx5n	39
12	Tx5p		Rx5p	40
11	GND	Ground	GND	41
10	GND		GND	42
9	Tx6n	V-by-One® HS Channel 6 (CML)	Rx6n	43
8	Tx6p		Rx6p	44
7	GND	Ground	GND	45
6	GND		GND	46
5	Tx7n	V-by-One® HS Channel 7 (CML)	Rx7n	47
4	Tx7p		Rx7p	48
3	GND	Ground	GND	49
2	NC	Non Connected	NC	50
1				51

4. Power supply setting

This chapter shows the power supply setting with the jumper.

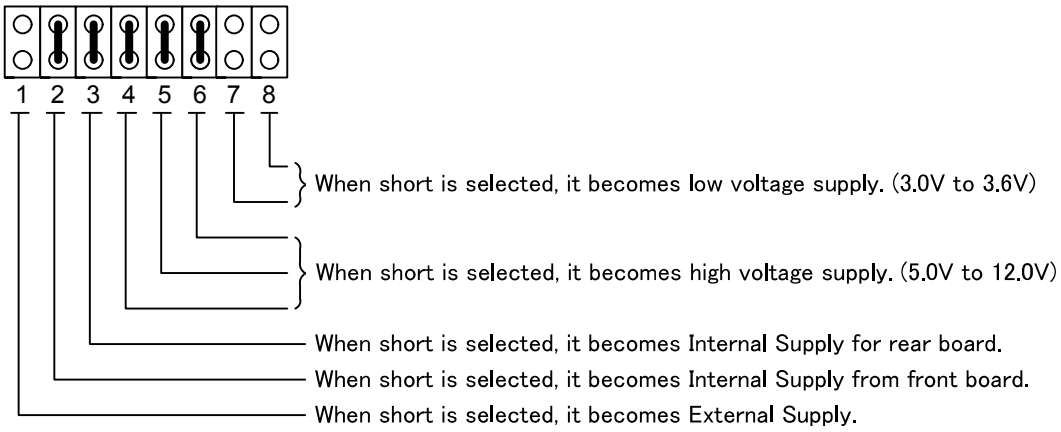

Figure 4. power supply setting with the jumper

Example4-1 : Internal Supply 5.0 V to 12.0V (Default Setting)

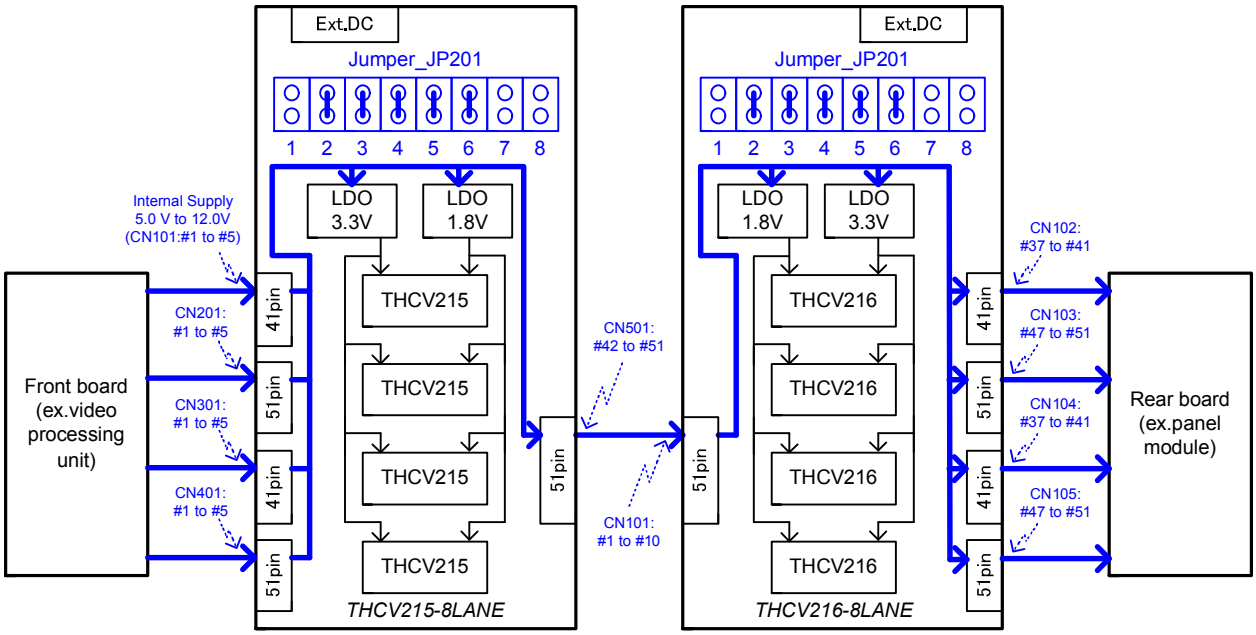

Figure 4-1. Internal Supply 5.0V to 12.0V

4. Power supply setting (Continued)

Example4-2 : External Supply 5.0V to 12.0V

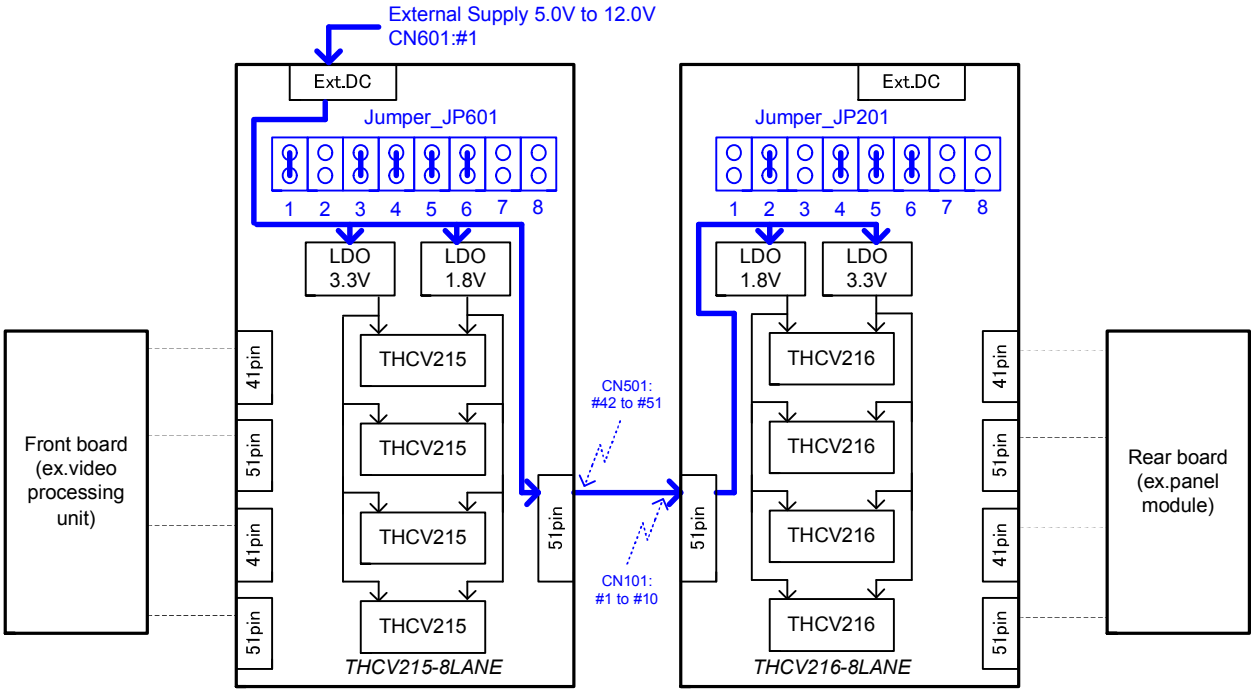

Figure 4-2. External Supply 5.0V to 12.0V

Example4-3 : External Supply 3.0V to 3.6V

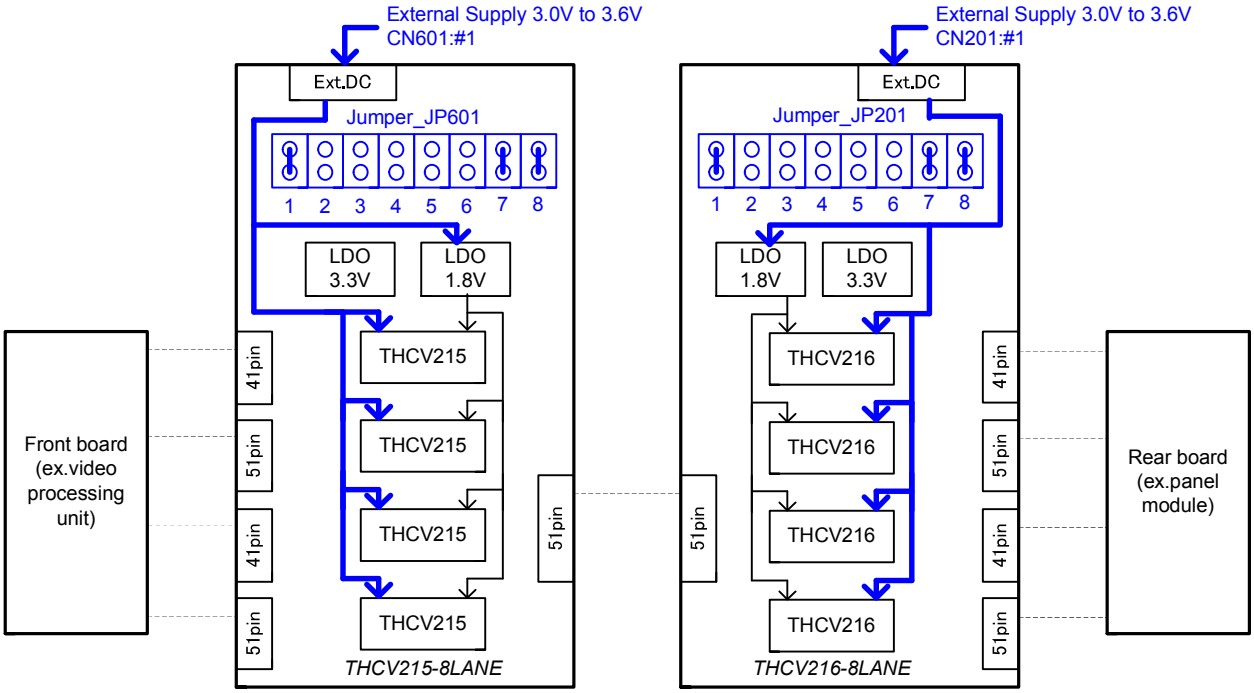

Figure 4-3. External Supply 3.0V to 3.6V

THCV215/216-8LANE Evaluation Kits

SerDes transmitter and receiver evaluation board

5. Function setting

This chapter shows the DIP switches of the control settings.

Table 5-1. DIP switches on the THCV215-8LANE Board

SW#	Symbol	Default Setting	Function
1	SDSEL	High (8 lane)	Selects the Lanes. Low : Not available High : 8 lane
2	COL0	Low	Selects the color depth. COL0 / COL1 / Function Low / Low / 6 bit mode High / Low / 8 bit mode Low / High / 10 bit mode High / High / Not available
3	COL1	High	
4	PDN	High (Normal)	Selects the power down. Low : Power down (CML output High Fix, other Hi-Z) High : Normal operation
5	DRV1	Low	Selects the drive strength. Must be set to DRV1=Low and to DRV0=High
6	DRV0	High	
7	PRE1	Low (0%)	Selects the pre-emphasis level. Low : 0% High : 100%
8	RES1	Low (Normal)	Selects the Field BET Mode. * Low : Normal operation (default) High : Field BET Mode enable

* Please see the datasheet for details. (THCV215-THCV216_Rev.x.xx_E.pdf)

Table 5-2. DIP switches on the THCV216-8LANE Board

SW#	Symbol	Default Setting	Function
1	SDSEL	High (8 lane)	Selects the Lanes. Low : Not available High : 8 lane
2	COL1	High	Selects the color depth. COL1 / COL0 / Function Low / Low / 6 bit mode Low / High / 8 bit mode High / Low / 10 bit mode High / High / Not available
3	COL0	Low	
4	PDN	High (Normal)	Selects the power down. Low : Power down High : Normal operation
5	RES3	Low (Normal)	Selects the Field BET Mode. * Low : Normal operation (default) High : Field BET Mode enable
6	NC	Low	Not connected
7	NC	Low	
8	RS	Low (Normal)	Direction of RS pin depends on RES3. Selects the LVDS swing range when RES3=Low High : Normal swing (350 mV typ.) Low : Reduced swing (200mV typ.) Field BET output when RES3=High *

* Please see the datasheet for details. (THCV215-216_Rev.x.xx_E.pdf)

6. Other functional Descriptions

This chapter shows other function.

6-1. About LED on the board.

Board	Power On detect.	Lock detect.
THCV215-8LANE	D601	D701
THCV216-8LANE	D201	-

6-2. THCV215 Link Ready function (RDY)

This is a CMOS output for indicating the link status. If link is ready RDY = High.

6-3. THCV216 Field BET mode settings.

Please detach Jumper (JP101 to JP104) for Field BET mode.

THCV215/216-8LANE Evaluation Kits

SerDes transmitter and receiver evaluation board

7. Schematic

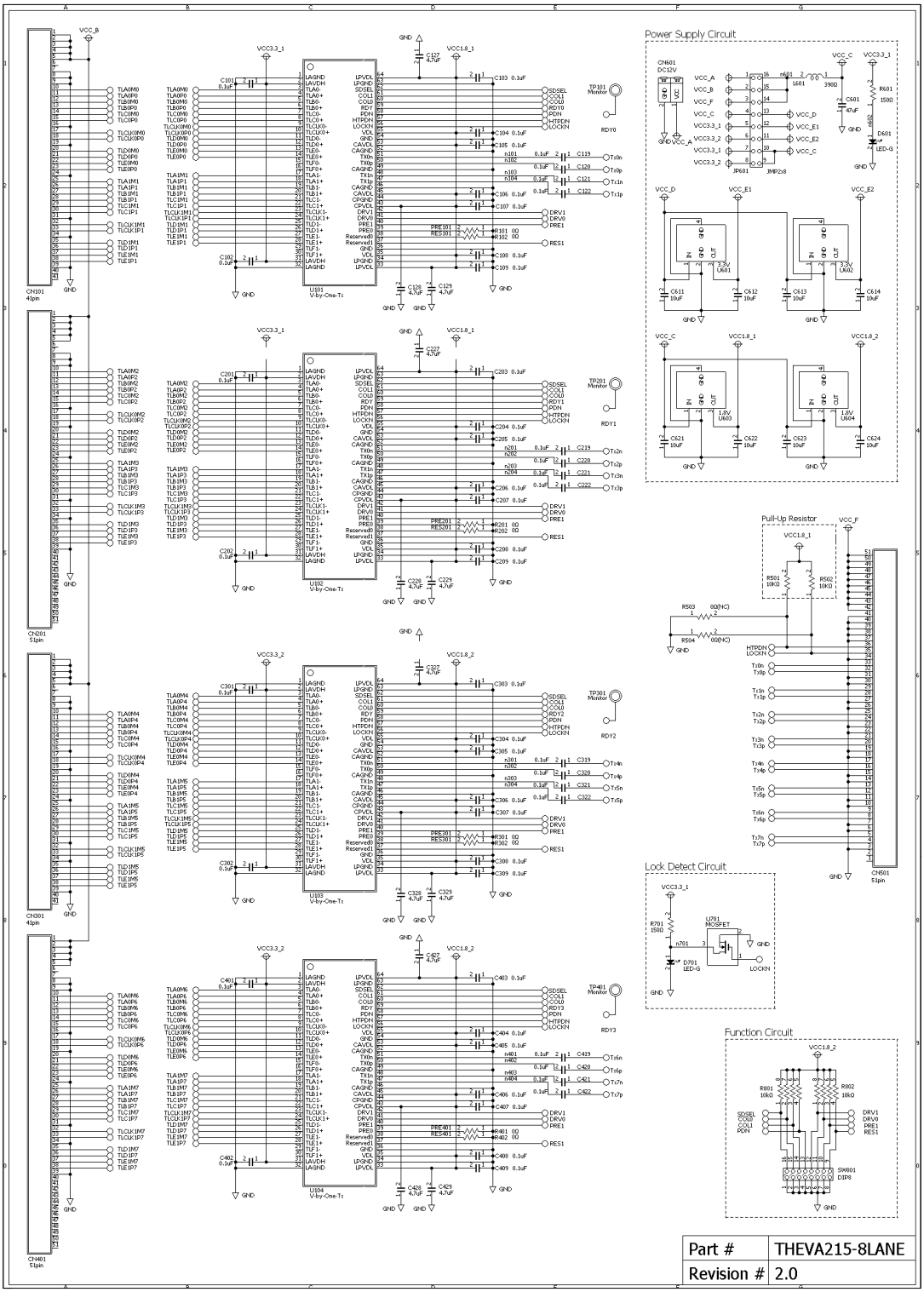

Figure 7-1. THCV215-8LANE schematic

THCV215/216-8LANE Evaluation Kits

SerDes transmitter and receiver evaluation board

7. Schematic

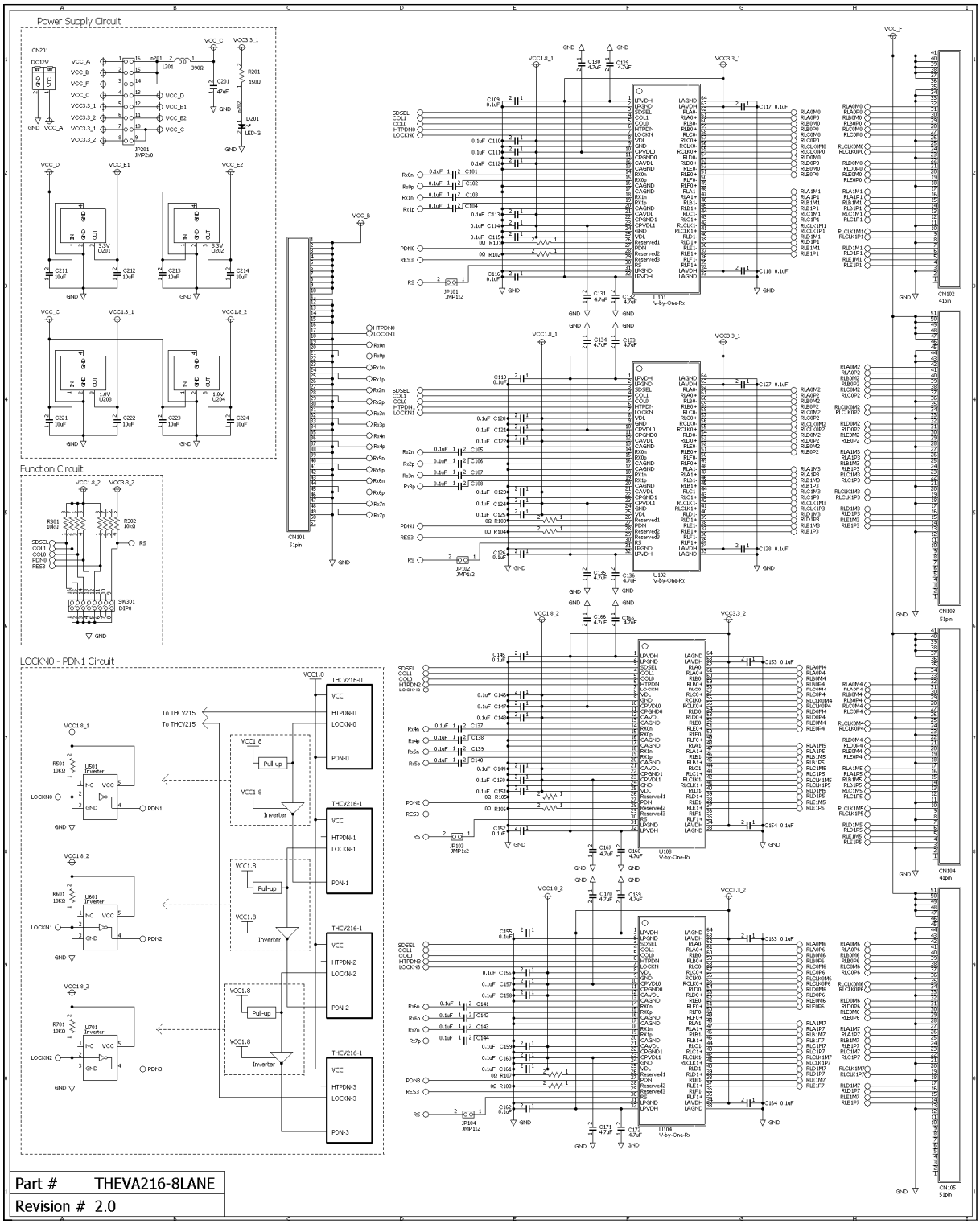

Figure 7-2. THCV216-8LANE schematic

THCV215/216-8LANE Evaluation Kits

SerDes transmitter and receiver evaluation board

8. Bill of Materials (BOM)

Table 8-1. BOM for THCV215-8LANE

Designator	Description	PKG	Part Number	Manufacturer
C101	0.1uF	1005	GRM155B31C104KA87	Murata
C102	0.1uF	1005	GRM155B31C104KA87	Murata
C103	0.1uF	1005	GRM155B31C104KA87	Murata
C104	0.1uF	1005	GRM155B31C104KA87	Murata
C105	0.1uF	1005	GRM155B31C104KA87	Murata
C106	0.1uF	1005	GRM155B31C104KA87	Murata
C107	0.1uF	1005	GRM155B31C104KA87	Murata
C108	0.1uF	1005	GRM155B31C104KA87	Murata
C109	0.1uF	1005	GRM155B31C104KA87	Murata
C119	0.1uF	1005	GRM155B31C104KA87	Murata
C120	0.1uF	1005	GRM155B31C104KA87	Murata
C121	0.1uF	1005	GRM155B31C104KA87	Murata
C122	0.1uF	1005	GRM155B31C104KA87	Murata
C127	4.7uF	1608	GRM188R60J475KE19D	Murata
C128	4.7uF	1608	GRM188R60J475KE19D	Murata
C129	4.7uF	1608	GRM188R60J475KE19D	Murata
C201	0.1uF	1005	GRM155B31C104KA87	Murata
C202	0.1uF	1005	GRM155B31C104KA87	Murata
C203	0.1uF	1005	GRM155B31C104KA87	Murata
C204	0.1uF	1005	GRM155B31C104KA87	Murata
C205	0.1uF	1005	GRM155B31C104KA87	Murata
C206	0.1uF	1005	GRM155B31C104KA87	Murata
C207	0.1uF	1005	GRM155B31C104KA87	Murata
C208	0.1uF	1005	GRM155B31C104KA87	Murata
C209	0.1uF	1005	GRM155B31C104KA87	Murata
C219	0.1uF	1005	GRM155B31C104KA87	Murata
C220	0.1uF	1005	GRM155B31C104KA87	Murata
C221	0.1uF	1005	GRM155B31C104KA87	Murata
C222	0.1uF	1005	GRM155B31C104KA87	Murata
C227	4.7uF	1608	GRM188R60J475KE19D	Murata
C228	4.7uF	1608	GRM188R60J475KE19D	Murata
C229	4.7uF	1608	GRM188R60J475KE19D	Murata
C301	0.1uF	1005	GRM155B31C104KA87	Murata
C302	0.1uF	1005	GRM155B31C104KA87	Murata
C303	0.1uF	1005	GRM155B31C104KA87	Murata
C304	0.1uF	1005	GRM155B31C104KA87	Murata
C305	0.1uF	1005	GRM155B31C104KA87	Murata
C306	0.1uF	1005	GRM155B31C104KA87	Murata
C307	0.1uF	1005	GRM155B31C104KA87	Murata
C308	0.1uF	1005	GRM155B31C104KA87	Murata
C309	0.1uF	1005	GRM155B31C104KA87	Murata
C319	0.1uF	1005	GRM155B31C104KA87	Murata
C320	0.1uF	1005	GRM155B31C104KA87	Murata
C321	0.1uF	1005	GRM155B31C104KA87	Murata
C322	0.1uF	1005	GRM155B31C104KA87	Murata
C327	4.7uF	1608	GRM188R60J475KE19D	Murata
C328	4.7uF	1608	GRM188R60J475KE19D	Murata
C329	4.7uF	1608	GRM188R60J475KE19D	Murata
C401	0.1uF	1005	GRM155B31C104KA87	Murata
C402	0.1uF	1005	GRM155B31C104KA87	Murata
C403	0.1uF	1005	GRM155B31C104KA87	Murata
C404	0.1uF	1005	GRM155B31C104KA87	Murata
C405	0.1uF	1005	GRM155B31C104KA87	Murata
C406	0.1uF	1005	GRM155B31C104KA87	Murata
C407	0.1uF	1005	GRM155B31C104KA87	Murata
C408	0.1uF	1005	GRM155B31C104KA87	Murata
C409	0.1uF	1005	GRM155B31C104KA87	Murata
C419	0.1uF	1005	GRM155B31C104KA87	Murata
C420	0.1uF	1005	GRM155B31C104KA87	Murata
C421	0.1uF	1005	GRM155B31C104KA87	Murata
C422	0.1uF	1005	GRM155B31C104KA87	Murata
C427	4.7uF	1608	GRM188R60J475KE19D	Murata
C428	4.7uF	1608	GRM188R60J475KE19D	Murata
C429	4.7uF	1608	GRM188R60J475KE19D	Murata
C601	47uF	3225	GRM32EB31A476ME20L	Murata
C611	10uF	2012	GRM21BB31C106KE15	Murata
C612	10uF	2012	GRM21BB31C106KE15	Murata
C613	10uF	2012	GRM21BB31C106KE15	Murata
C614	10uF	2012	GRM21BB31C106KE15	Murata
C621	10uF	2012	GRM21BB31C106KE15	Murata
C622	10uF	2012	GRM21BB31C106KE15	Murata
C623	10uF	2012	GRM21BB31C106KE15	Murata
C624	10uF	2012	GRM21BB31C106KE15	Murata
CN101	41pin	3404	FX15SC-41S-0.5SH	HRS
CN201	51pin	3804	FX15SC-51S-0.5SH	HRS
CN301	41pin	3404	FX15SC-41S-0.5SH	HRS
CN401	51pin	3804	FX15SC-51S-0.5SH	HRS
CN501	51pin	3804	FX16-51S-0.5SH	HRS
CN601	DC12V	1105	ML-800-S1H-2P	Sato-parts
D601	LED-G	1608	SML-310MT	ROHM
D701	LED-G	1608	SML-310MT	ROHM
JP601	JMP2x8	2.54mm	2*8-PinHeaders	-
L601	390Ω	1608	MPZ1608R391A	TDK
R101	0Ω	1005	MCR01MZPJ000	ROHM
R102	0Ω	1005	MCR01MZPJ000	ROHM
R103	0Ω(NC)	1005	MCR01MZPJ000	ROHM
R104	0Ω(NC)	1005	MCR01MZPJ000	ROHM
R201	0Ω	1005	MCR01MZPJ000	ROHM
R202	0Ω	1005	MCR01MZPJ000	ROHM
R203	0Ω(NC)	1005	MCR01MZPJ000	ROHM
R204	0Ω(NC)	1005	MCR01MZPJ000	ROHM
R301	0Ω	1005	MCR01MZPJ000	ROHM
R302	0Ω	1005	MCR01MZPJ000	ROHM
R303	0Ω(NC)	1005	MCR01MZPJ000	ROHM
R304	0Ω(NC)	1005	MCR01MZPJ000	ROHM
R401	0Ω	1005	MCR01MZPJ000	ROHM
R402	0Ω	1005	MCR01MZPJ000	ROHM
R403	0Ω(NC)	1005	MCR01MZPJ000	ROHM
R404	0Ω(NC)	1005	MCR01MZPJ000	ROHM
R501	10kΩ	1005	MCR01MZPF103	ROHM
R502	10kΩ	1005	MCR01MZPF103	ROHM
R503	0Ω(NC)	1005	MCR01MZPJ000	ROHM
R504	0Ω(NC)	1005	MCR01MZPJ000	ROHM
R601	150Ω	1608	MCR03EZPFX151	ROHM
R701	150Ω	1608	MCR03EZPFX151	ROHM
R801	10kΩ	2010	EXB-28V103JX	Panasonic
R802	10kΩ	2010	EXB-28V103JX	Panasonic
SW801	DIP8	2206	A6S-8104-H	Omuron
U101	V-by-One-Tx	TSSOP64	THCV215	THine
U102	V-by-One-Tx	TSSOP64	THCV215	THine
U103	V-by-One-Tx	TSSOP64	THCV215	THine
U104	V-by-One-Tx	TSSOP64	THCV215	THine
U601	3.3V	SC-63	uPC2933BT-AZ	NEC
U602	3.3V	SC-63	uPC2933BT-AZ	NEC
U603	1.8V	SC-63	uPC2918BT-AZ	NEC
U604	1.8V	SC-63	uPC2918BT-AZ	NEC
U701	MOSFET	1616	SSM3K16FS	Toshiba

Table 8-2. BOM for THCV216-8LANE

Designator	Description	PKG	Part Number	Manufacturer
C101	0.1uF	1005	GRM155B31C104KA87	Murata
C102	0.1uF	1005	GRM155B31C104KA87	Murata
C103	0.1uF	1005	GRM155B31C104KA87	Murata
C104	0.1uF	1005	GRM155B31C104KA87	Murata
C105	0.1uF	1005	GRM155B31C104KA87	Murata
C106	0.1uF	1005	GRM155B31C104KA87	Murata
C107	0.1uF	1005	GRM155B31C104KA87	Murata
C108	0.1uF	1005	GRM155B31C104KA87	Murata
C109	0.1uF	1005	GRM155B31C104KA87	Murata
C110	0.1uF	1005	GRM155B31C104KA87	Murata
C111	0.1uF	1005	GRM155B31C104KA87	Murata
C112	0.1uF	1005	GRM155B31C104KA87	Murata
C113	0.1uF	1005	GRM155B31C104KA87	Murata
C114	0.1uF	1005	GRM155B31C104KA87	Murata
C115	0.1uF	1005	GRM155B31C104KA87	Murata
C116	0.1uF	1005	GRM155B31C104KA87	Murata
C117	0.1uF	1005	GRM155B31C104KA87	Murata
C118	0.1uF	1005	GRM155B31C104KA87	Murata
C119	0.1uF	1005	GRM155B31C104KA87	Murata
C120	0.1uF	1005	GRM155B31C104KA87	Murata
C121	0.1uF	1005	GRM155B31C104KA87	Murata
C122	0.1uF	1005	GRM155B31C104KA87	Murata
C123	0.1uF	1005	GRM155B31C104KA87	Murata
C124	0.1uF	1005	GRM155B31C104KA87	Murata
C125	0.1uF	1005	GRM155B31C104KA87	Murata
C126	0.1uF	1005	GRM155B31C104KA87	Murata
C127	0.1uF	1005	GRM155B31C104KA87	Murata
C128	0.1uF	1005	GRM155B31C104KA87	Murata
C129	4.7uF	1608	GRM188R60J475KE19D	Murata
C130	4.7uF	1608	GRM188R60J475KE19D	Murata
C131	4.7uF	1608	GRM188R60J475KE19D	Murata
C132	4.7uF	1608	GRM188R60J475KE19D	Murata
C133	4.7uF	1608	GRM188R60J475KE19D	Murata
C134	4.7uF	1608	GRM188R60J475KE19D	Murata
C135	4.7uF	1608	GRM188R60J475KE19D	Murata
C136	4.7uF	1608	GRM188R60J475KE19D	Murata
C137	0.1uF	1005	GRM155B31C104KA87	Murata
C138	0.1uF	1005	GRM155B31C104KA87	Murata
C139	0.1uF	1005	GRM155B31C104KA87	Murata
C140	0.1uF	1005	GRM155B31C104KA87	Murata
C141	0.1uF	1005	GRM155B31C104KA87	Murata
C142	0.1uF	1005	GRM155B31C104KA87	Murata
C143	0.1uF	1005	GRM155B31C104KA87	Murata
C144	0.1uF	1005	GRM155B31C104KA87	Murata
C145	0.1uF	1005	GRM155B31C104KA87	Murata
C146	0.1uF	1005	GRM155B31C104KA87	Murata
C147	0.1uF	1005	GRM155B31C104KA87	Murata
C148	0.1uF	1005	GRM155B31C104KA87	Murata
C149	0.1uF	1005	GRM155B31C104KA87	Murata
C150	0.1uF	1005	GRM155B31C104KA87	Murata
C151	0.1uF	1005	GRM155B31C104KA87	Murata
C152	0.1uF	1005	GRM155B31C104KA87	Murata
C153	0.1uF	1005	GRM155B31C104KA87	Murata
C154	0.1uF	1005	GRM155B31C104KA87	Murata
C155	0.1uF	1005	GRM155B31C104KA87	Murata
C156	0.1uF	1005	GRM155B31C104KA87	Murata
C157	0.1uF	1005	GRM155B31C104KA87	Murata
C158	0.1uF	1005	GRM155B31C104KA87	Murata
C159	0.1uF	1005	GRM155B31C104KA87	Murata
C160	0.1uF	1005	GRM155B31C104KA87	Murata
C161	0.1uF	1005	GRM155B31C104KA87	Murata
C162	0.1uF	1005	GRM155B31C104KA87	Murata
C163	0.1uF	1005	GRM155B31C104KA87	Murata
C164	0.1uF	1005	GRM155B31C104KA87	Murata
C165	4.7uF	1608	GRM188R60J475KE19D	Murata
C166	4.7uF	1608	GRM188R60J475KE19D	Murata
C167	4.7uF	1608	GRM188R60J475KE19D	Murata
C168	4.7uF	1608	GRM188R60J475KE19D	Murata
C169	4.7uF	1608	GRM188R60J475KE19D	Murata
C170	4.7uF	1608	GRM188R60J475KE19D	Murata
C171	4.7uF	1608	GRM188R60J475KE19D	Murata
C172	4.7uF	1608	GRM188R60J475KE19D	Murata
C201	47uF	3225	GRM32EB31A476ME20L	Murata
C211	10uF	2012	GRM21BB31C106KE15	Murata
C212	10uF	2012	GRM21BB31C106KE15	Murata
C213	10uF	2012	GRM21BB31C106KE15	Murata
C214	10uF	2012	GRM21BB31C106KE15	Murata
C221	10uF	2012	GRM21BB31C106KE15	Murata
C222	10uF	2012	GRM21BB31C106KE15	Murata
C223	10uF	2012	GRM21BB31C106KE15	Murata
C224	10uF	2012	GRM21BB31C106KE15	Murata
CN101	51pin	3804	FX16-51S-0.5SH	HRS
CN102	41pin	3404	FX15SC-41S-0.5SH	HRS
CN103	51pin	3804	FX15SC-51S-0.5SH	HRS
CN104	41pin	3404	FX15SC-41S-0.5SH	HRS
CN105	51pin	3804	FX15SC-51S-0.5SH	HRS
CN201	DC12V	1105	ML-800-S1H-2P	Sato-parts
D201	LED-G	1608	SML-310MT	ROHM
JP101	JMP1x2	2.54mm	1*2-PinHeaders	-
JP102	JMP1x2	2.54mm	1*2-PinHeaders	-
JP103	JMP1x2	2.54mm	1*2-PinHeaders	-
JP104	JMP1x2	2.54mm	1*2-PinHeaders	-
JP201	JMP2x8	2.54mm	2*8-PinHeaders	-
L201	390Ω	1608	MPZ1608R391A	TDK
R101	0Ω	1005	MCR01MZPJ000	ROHM
R102	0Ω	1005	MCR01MZPJ000	ROHM
R103	0Ω	1005	MCR01MZPJ000	ROHM
R104	0Ω	1005	MCR01MZPJ000	ROHM
R105	0Ω	1005	MCR01MZPJ000	ROHM
R106	0Ω	1005	MCR01MZPJ000	ROHM
R107	0Ω	1005	MCR01MZPJ000	ROHM
R108	0Ω	1005	MCR01MZPJ000	ROHM
R201	150Ω	1608	MCR03EZPFX151	ROHM
R301	10kΩ	2010	EXB-28V103JX	Panasonic
R302	10kΩ	2010	EXB-28V103JX	Panasonic
R501	10KΩ	1005	MCR01MZPF103	ROHM
R601	10KΩ	1005	MCR01MZPF103	ROHM
R701	10KΩ	1005	MCR01MZPF103	ROHM
SW301	DIP8	2206	A6S-8104-H	Omuron
U101	V-by-One-Rx	TSSOP64	THCV216	THine
U102	V-by-One-Rx	TSSOP64	THCV216	THine
U103	V-by-One-Rx	TSSOP64	THCV216	THine
U104	V-by-One-Rx	TSSOP64	THCV216	THine
U201	3.3V	SC-63	uPC2933BT-AZ	NEC
U202	3.3V	SC-63	uPC2933BT-AZ	NEC
U203	1.8V	SC-63	uPC2918BT-AZ	NEC
U204	1.8V	SC-63	uPC2918BT-AZ	NEC
U501	Inverter	SON5	TC7SG04FU	Toshiba
U601	Inverter	SON5	TC7SG04FU	Toshiba
U701	Inverter	SON5	TC7SG04FU	Toshiba

9. Layout

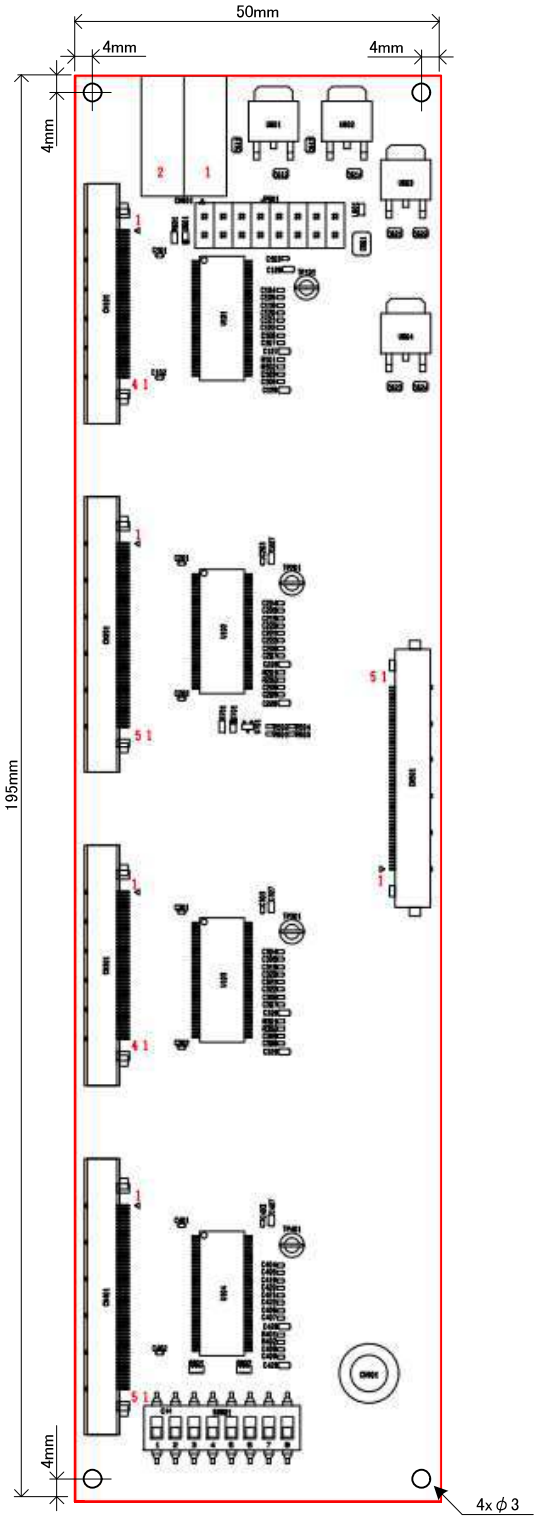

Figure 9-1. Component Placement Guide of THCV215-8LANE

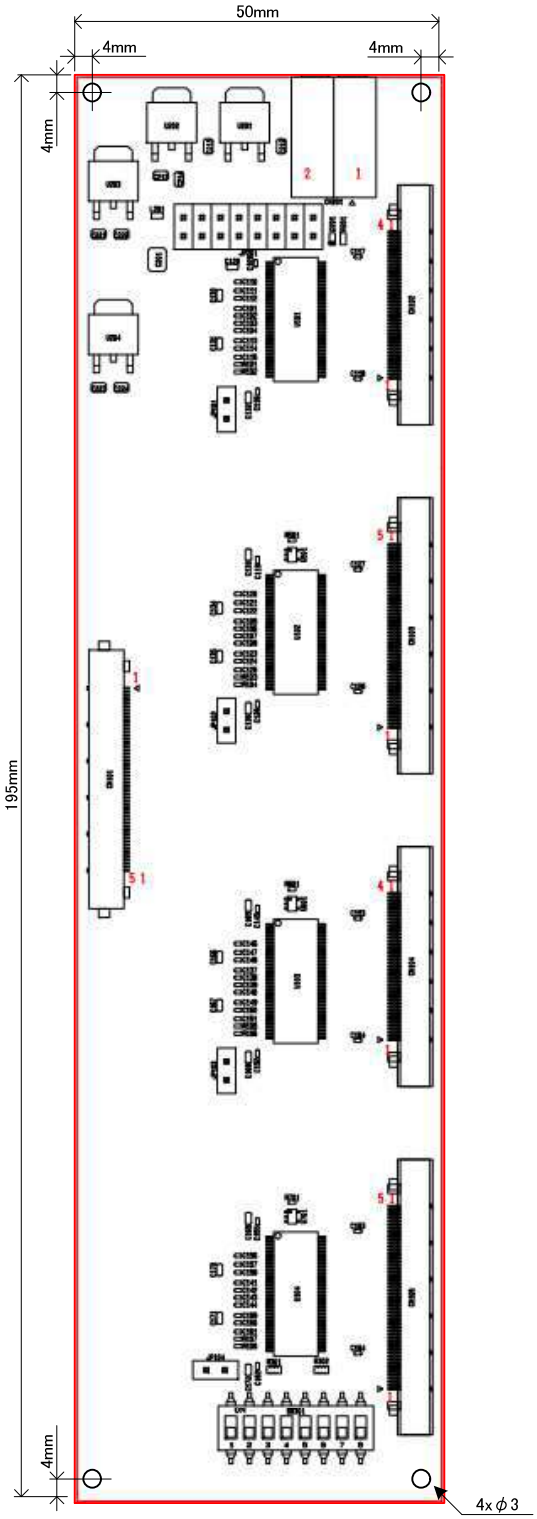

Figure 9-2. Component Placement Guide of THCV216-8LANE

10. Cable

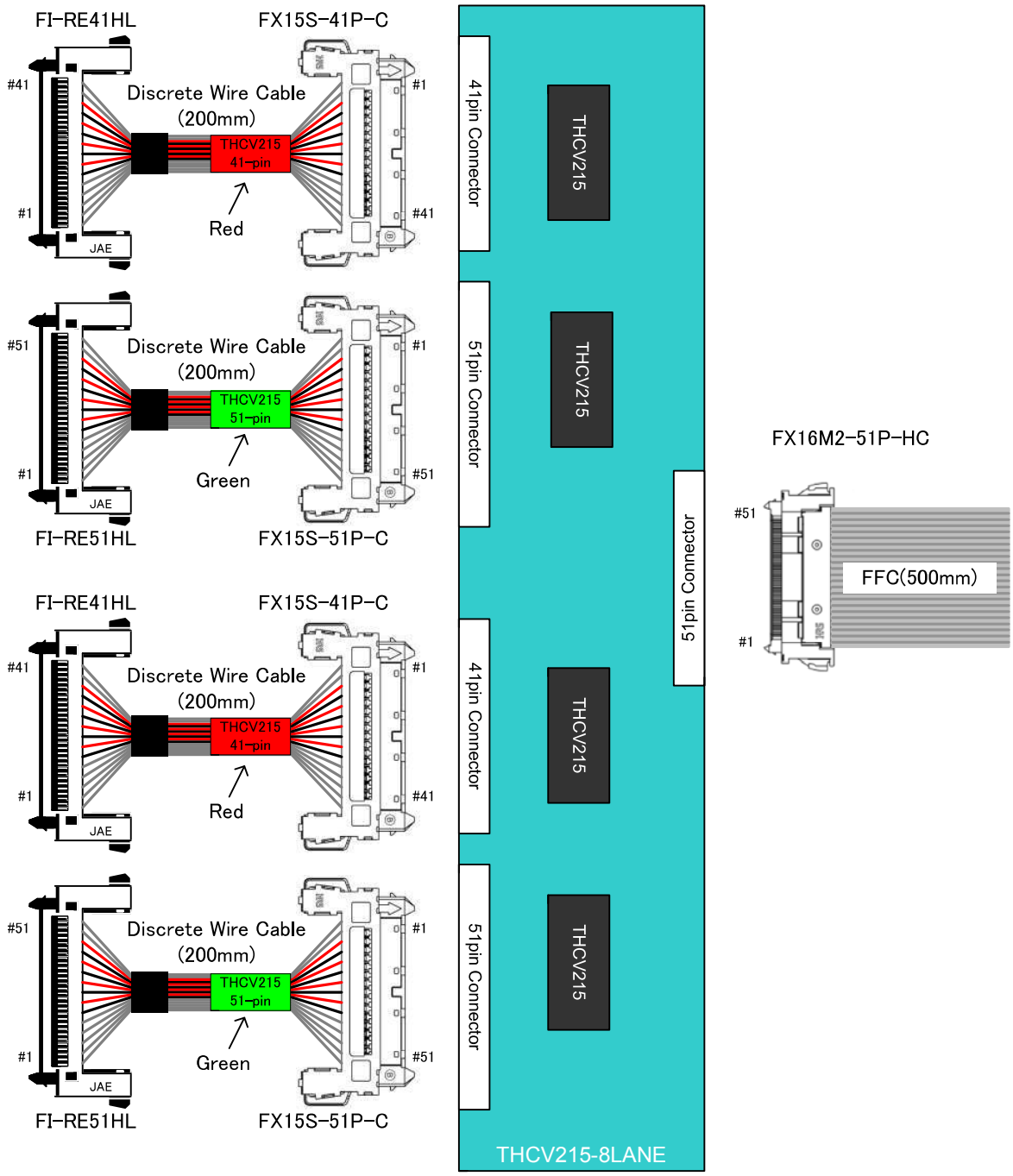

Figure 10-1. Cable of THCV215-8LANE

10. Cable

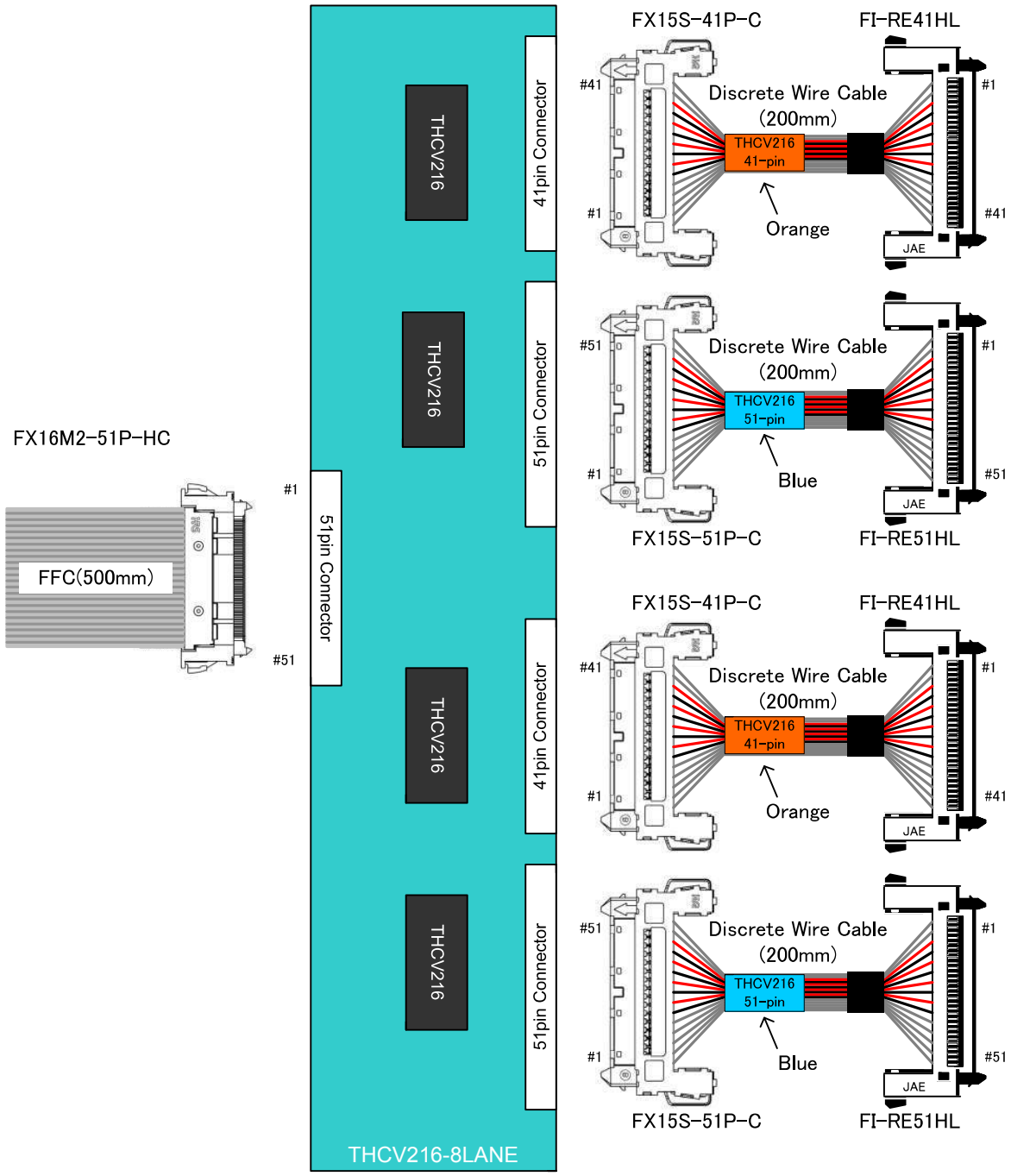

Figure 10-2. Cable of THCV216-8LANE

THCV215/216-8LANE Evaluation Kits

SerDes transmitter and receiver evaluation board

Notices and Requests

1. The product specifications described in this material are subject to change without prior notice.
2. The circuit diagrams described in this material are examples of the application which may not always apply to the customer's design. We are not responsible for possible errors and omissions in this material. Please note if errors or omissions should be found in this material, we may not be able to correct them immediately.
3. This material contains our copyright, know-how or other proprietary. Copying or disclosing to third parties the contents of this material without our prior permission is prohibited.
4. Note that if infringement of any third party's industrial ownership should occur by using this product, we will be exempted from the responsibility unless it directly relates to the production process or functions of the product.
5. This product is presumed to be used for general electric equipment, not for the applications which require very high reliability (including medical equipment directly concerning people's life, aerospace equipment, or nuclear control equipment). Also, when using this product for the equipment concerned with the control and safety of the transportation means, the traffic signal equipment, or various Types of safety equipment, please do it after applying appropriate measures to the product.
6. Despite our utmost efforts to improve the quality and reliability of the product, faults will occur with a certain small probability, which is inevitable to a semi-conductor product. Therefore, you are encouraged to have sufficiently redundant or error preventive design applied to the use of the product so as not to have our product cause any social or public damage.
7. Please note that this product is not designed to be radiation-proof.
8. Customers are asked, if required, to judge by themselves if this product falls under the category of strategic goods under the Foreign Exchange and Foreign Trade Control Law.

THine Electronics, Inc.

sales@thine.co.jp