THIS DRAWING IS UNPUBLISHED. RELEASED FOR PUBLICATION – , – .
© COPYRIGHT – BY TYCO ELECTRONICS CORPORATION. ALL INTERNATIONAL RIGHTS RESERVED.

LOC	DIST
DF	DO

REVISIONS

P	LTR	DESCRIPTION	DATE	DWN	APVD
	C	REV PER ECO 08-022905	16OCT2008	PK	BW

1. THIS PLUG WILL MATE WITH ANY SIZE 4,62 POSN. RECEPTACLE IN AMPLIMITE SERIES.
2. CONNECTOR SUPPLIED WITHOUT CONTACTS; SHOWN FOR ILLUSTRATION ONLY.
3. BE-CU RETENTION CLIPS ARE INCLUDED IN INSERTS AND INSTALLED WITH TINES POINTING TOWARDS MATING FACE.
4. OVERALL DIMENSIONS DO NOT INCLUDE RAISED CAVITY ID.
5. MARKING FAR SIDE REFERS TO WIDE SIDE OF KEYSTONE. NEAR SIDE REFERS TO NARROW SIDE OF KEYSTONE
6. 100% INSPECTION REQUIRED PER BOEING 1B01:
   A. VISUAL
   B. DWV
   C. IR
7. CUSTOMER REQUIRES SINGLE LOT DATE CODE.

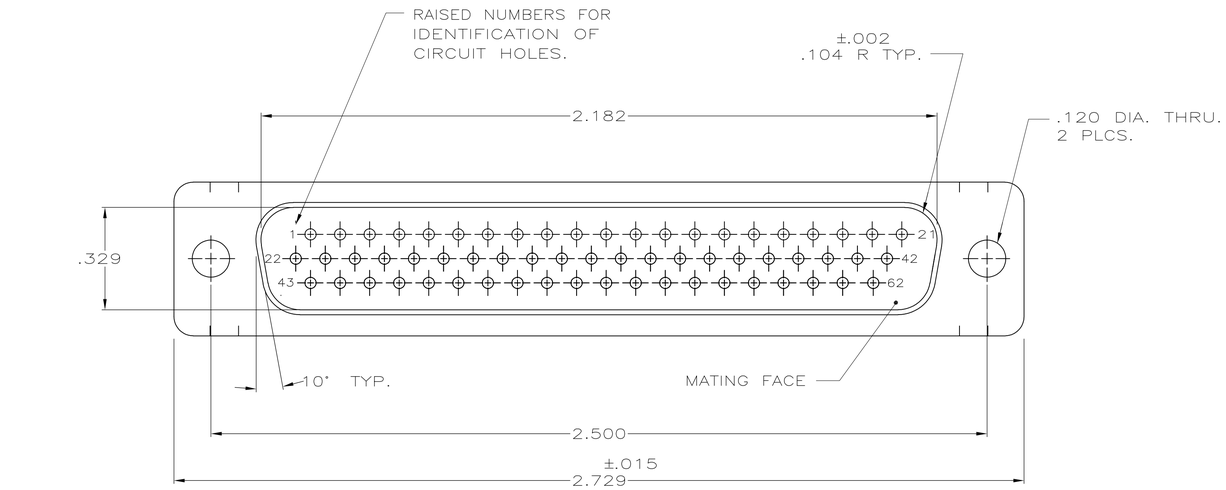

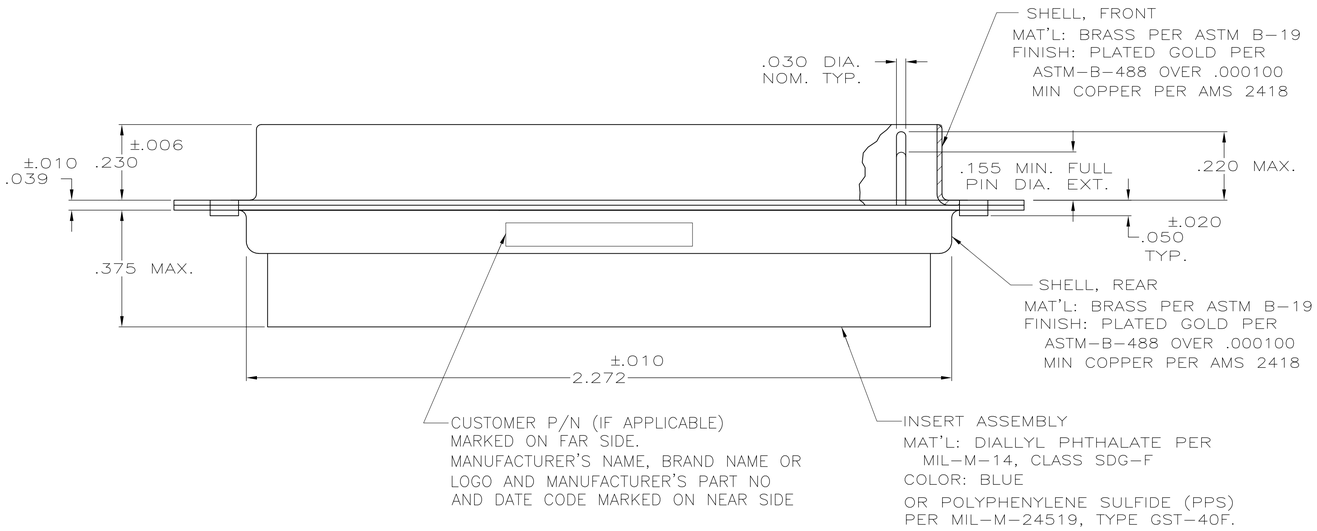

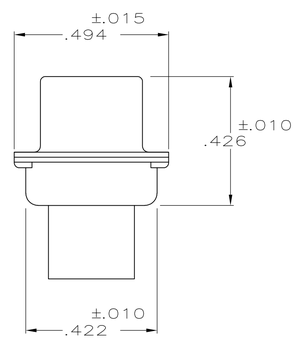

6	1B01 - 010PHW	1-211652-1
6	1B01 - 010	211652-1
REMARKS	CUSTOMER MARKING	PART NO.

THIS DRAWING IS A CONTROLLED DOCUMENT.

DIMENSIONS: INCHES

TOLERANCES UNLESS OTHERWISE SPECIFIED:
0 PLC ± –
1 PLC ± –
2 PLC ± –
3 PLC ± .005
4 PLC ± –
ANGLES ± 0°30'

MATERIAL: SEE CALLOUT
FINISH: SEE CALLOUT

DWN D. ERDMAN 3-26-84
CHK B. YOHN 4-26-84
APVD J. BROSCHARD 6-29-84
PRODUCT SPEC —
APPLICATION SPEC —
WEIGHT —

Tyco Electronics
Tyco Electronics Corporation
Harrisburg, PA 17105-3608

NAME: PLUG ASS'Y, AMPLIMITE 62 POSN,SIZE 4, SERIES 90 NON-MAGNETIC

SIZE	CAGE CODE	DRAWING NO	RESTRICTED TO
A1	00779	C-211652	—

CUSTOMER DRAWING | SCALE NTS | SHEET 1 OF 1 | REV C

4805 (1/08)