POS.	A	B	C	D	E	F	Part NO.
9	30.8	16.30	25.00	19.2	11.08	8.31	DLS1XS4AA39X
15	39.2	24.60	33.30	27.7	19.39	16.62	DLS2XS4AA39X
25	53.1	38.30	47.10	41.1	33.24	30.47	DLS3XS4AA39X
37	69.4	54.80	63.50	57.3	49.86	47.09	DLS4XS4AA39X

used for: D-SUB

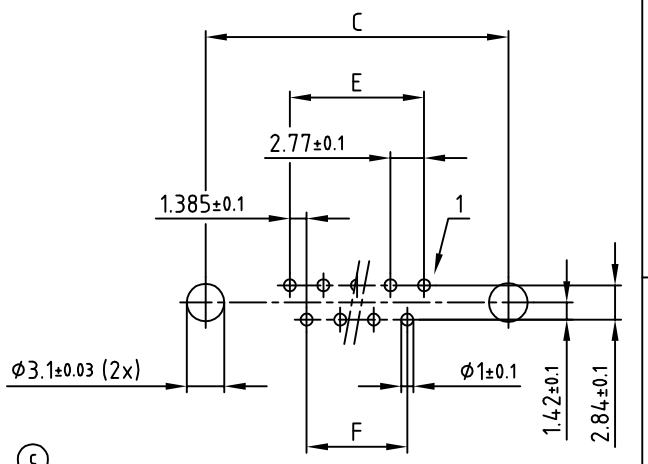

(c) P.C.B. HOLE DRILLINGS

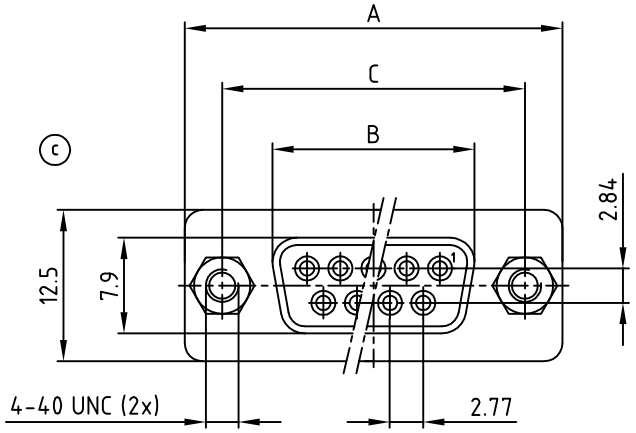

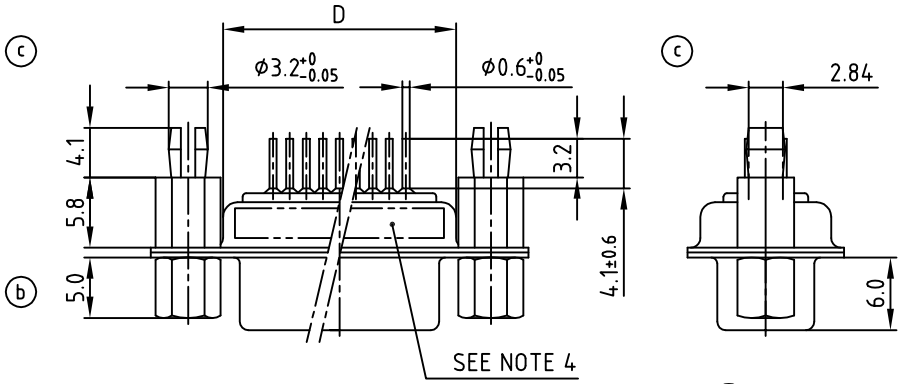

(c) SPECIFICTION:

1. MATERIAL:
   INSULATOR: THERMAL PLASTIC UL 94 V-0; BLACK
   CONTACTS: COPPER ALLOY
   SHELL: STEEL WITH Cu 40µin min. 80~120µin NICKEL
   RIVET, BOARDLOCK: COPPER ALLOY WITH 80~120µin NICKEL
2. CONTACT PLATING:
   UNDERPLATE: 50µin NICKEL
   CONTACT AREA: GOLD FLASH
   SOLDER TAILS AREA: 100µin TIN / LEAD FREE
3. ELECTRICAL:
   OPERATION VOLTAGE: 250 VAC max.
   CURRENT RATING: 3 A max.
   CONTACT RESISTANCE: 15 mOHM max.
   INSULATION RESISTANCE: 3000MOHM min. @ 500 VDC
   DIELECTRIC WITHSTANDING VOLTAGE: 1000 VAC / MINUTE
   OPERATING TEMPERATURE: -55°C TO +105°C
4. CONNECTOR IS PART MARKED: PART-NO. CONEC ABC

Directive 2002/95/EC RoHS compliant

THIS DRAWING MAY NOT BE COPIED OR REPRODUCED IN ANY WAY, AND MAY NOT BE PASSED ON TO A THIRD PARTY WITHOUT WRITTEN PERMISSION. OWNERSHIP AND COPYRIGHT OF CONEC GmbH

DO NOT ALTER CAD DRAWING BY HAND

rev.	description	date	name
5 x c	Ä5347	16.09.2014	Lehm.
1 x b	Ä2698	30.03.2007	ES
a	Original		

tolerance
ANG. ±5°
0. ±0.5
.0 ±0.3
.00 ±0.2

	date	name
2006		
drawn	24.01.	Lehmenkühler
appd.	24.01.	Mickenbecker
norm	DIN 41652	
d-old		

CONEC®

scale: 2:1
material: SEE NOTES

title:
D-SUB FEMALE
9-37pos. PCB STRAIGHT STAMPED CONTACTS
rear:5.8mm snap-in/front:5.0mm open hex rivet

dwg no: 16K1A1706
AutoCAD 2004
DIN-A 4
sh: 1/1

product no: SEE TABLE