SIGN	DATE	DESCRIPTION	APPROVER
1	4/01'09	Current,wire range,torque, sefety approval are changed	Jody
2	11/17'09	Wire guard solder pin is changed from Brass to Copper	Aaron
3	04/04'11	Add is spec.	Chen Bo
		THIS IS CAD DRAWING, DO NOT REVISE MANUALLY!!!	

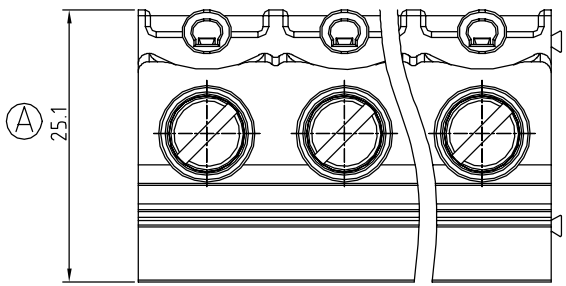

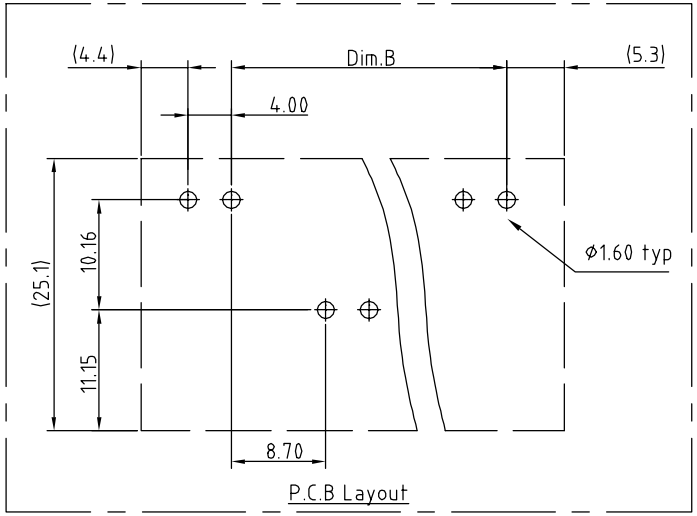

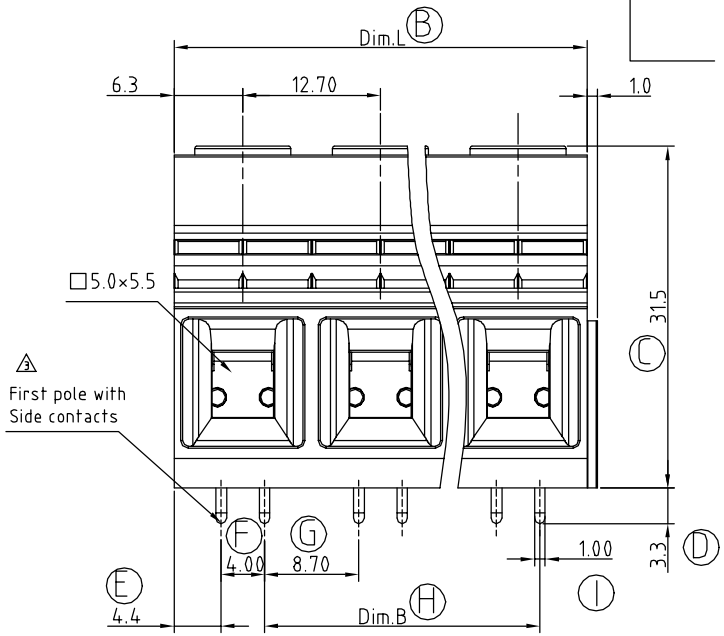

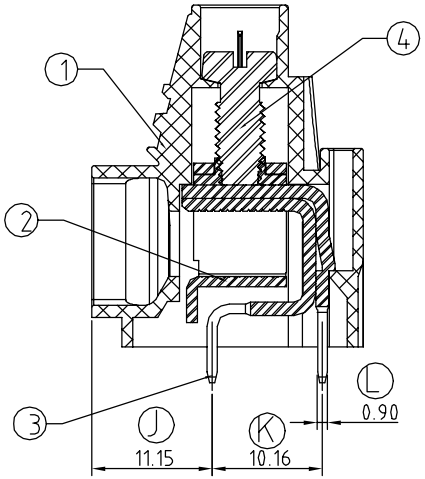

Material:

- Item 1 Terminal housing :Thermoplastic (UL 94V-0)
- Item 2 Coamp : Steel stamping , Zinc plated
- 2 Item 3 Wire guard solder pin : Copper ,Tin plated
- Item 4 Terminal screw: Steel Zinc plating"-"slot type

	Electrical	cULs	IEC
	Voltage rating :	600V	1000V
1	Current rating :	65A	76A
	Wire range :	16.00mm²	
	Solid wire (AWG) :	6-20	
	Stranded wire (AWG) :	6-20	
1	Torque (LB-In.) :	19LB-In	
	Screw :	M4.5	
	Wire strip length :	10-11mm	
	Withstanding voltage :	2.2KV	6KV
	Operating temperature :	-40°C+115°C	
	Soldering temperature :	250°C+10°C/5 Sec	
	Safety Approval :	c UL us	

VP xx 85 x 7 xxxx G

- xx: NO of ploes
  - 02 2 CONTACTS
  - 03 3 CONTACTS
  - ... ...
  - 12 12 CONTACTS
- x: 0: Black; 5: Green (RAL 6018/T); 6: Blue; 8: Grey (RAL 7035/D)
- G: RoHS Pb<40,000ppm
- xxxx: 0000 Standard @ Logo; 000A Standard ANY Logo; Any special item by customer request, please contact sales department.

Poles	02	03	04	05	06	07	08	09	10	11	12
Dim L	25.40	38.10	50.80	63.50	76.20	88.90	101.60	114.30	127.0	139.70	152.40
Dim B	12.70	25.40	38.10	50.80	63.50	76.20	88.90	101.60	114.30	127.0	139.70
TOL	±0.15				±0.20				±0.30		

ANYTEK

CUSTOMER COPY

ALL RIGHTS RESERVED. REPRODUCTION OR ISSUE TO THIRD PARTIES IN ANY FORM WHATEVER IS NOT PERMITTED WITHOUT WRITTEN AUTHORITY FROM THE PROPRIETOR. PROPERTY OF ANYTEK TECHNOLOGY CO., LTD

TITLE	VP 12.70 Series (Double tail 0.9×1.0) Contacts Pin Pitch 4.0mm				
PART NO.	VPxx85x7xxxxG			DWG NO.	8VP0105
APPROVED	CHECKED	DESIGNED	DRAWN	CUST NO.	
			Chen Bo 2011.04.04	UNIT: mm	
				SCALE: NONE	
				SHEET: 01/01	REV.: E

Tolerance	
X.	±0.50
X.X	±0.30
X.XX	±0.10
X°	±1°