THIS DRAWING IS UNPUBLISHED. RELEASED FOR PUBLICATION 20
© COPYRIGHT 20 BY - ALL RIGHTS RESERVED.

REVISIONS

P	LTR	DESCRIPTION	DATE	DWN	APVD
	F1	ADD NEW DASH NUMBER 2-4	05JAN2014	CZ	SZ
	F2	ADD NEW DASH NUMBER 2-5	05MAR2015	CZ	SZ
	F3	ADD NEW DASH NUMBER 2-6	24MAR2015	CZ	SZ
	F4	ADD NEW DASH NUMBER 2-7	20DEC2017	CZ	SZ

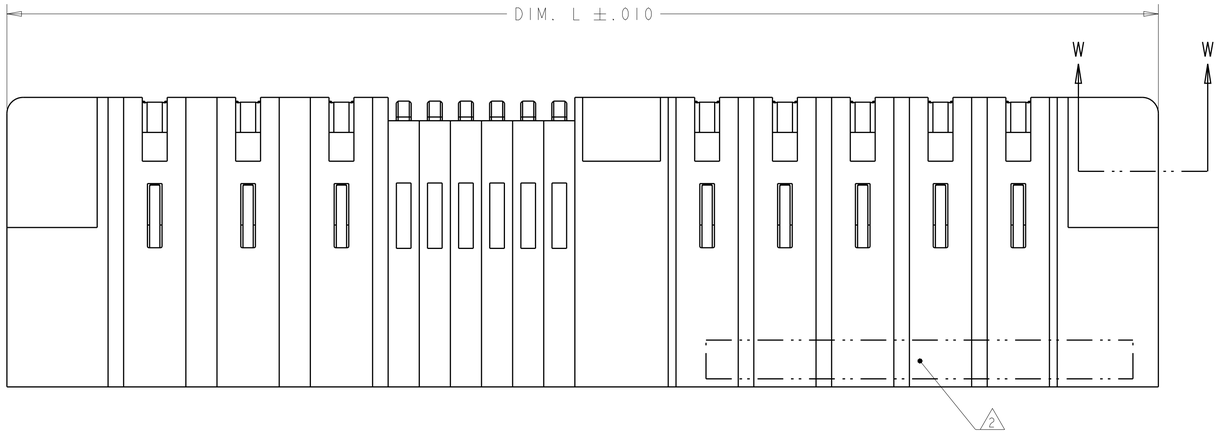

1. OPTIONAL CENTER MODULE WITH Ø.150 THRU HOLE OR HOLD DOWN FEATURE.
2. "AMP", PART NUMBER, AND DATE CODE TO BE MARKED IN AREA SHOWN. PARTS UNDER 2.00 LONG MAY BE MARKED ON BOTH SIDES.
3. MATERIAL: HOUSING - GLASS FILLED HIGH TEMP THERMO PLASTIC, UL94 V-0
   SIGNAL CONTACT - COPPER ALLOY
   POWER CONTACT - HIGH CONDUCTIVITY COPPER ALLOY
4. CONTACT PLATING: NOBLE METAL PLATING ON CONTACT FUNCTIONAL AREA
5. MECHANICAL CONNECTOR KEEP OUT ZONE.
6. DATUM AND BASIC DIMENSIONS ESTABLISHED BY CUSTOMER.
7. HOLD DOWN SEATING DEPTH DIMENSION FOR 1450130-4 IS .185 TYP
8. PCB - ALL HOLE DIAMETERS ARE FINISHED HOLE SIZES.
9. PCB - .0453 +/-.0010 DRILLED HOLES PLATES WITH .0003 MIN Sn OVER .001 TO .003 Cu PLATING TO ACHIEVE A .040±.003 DIA HOLE.
10. VARIABLE DIMENSIONS SHOWN ON VIEW (SHEET 4).

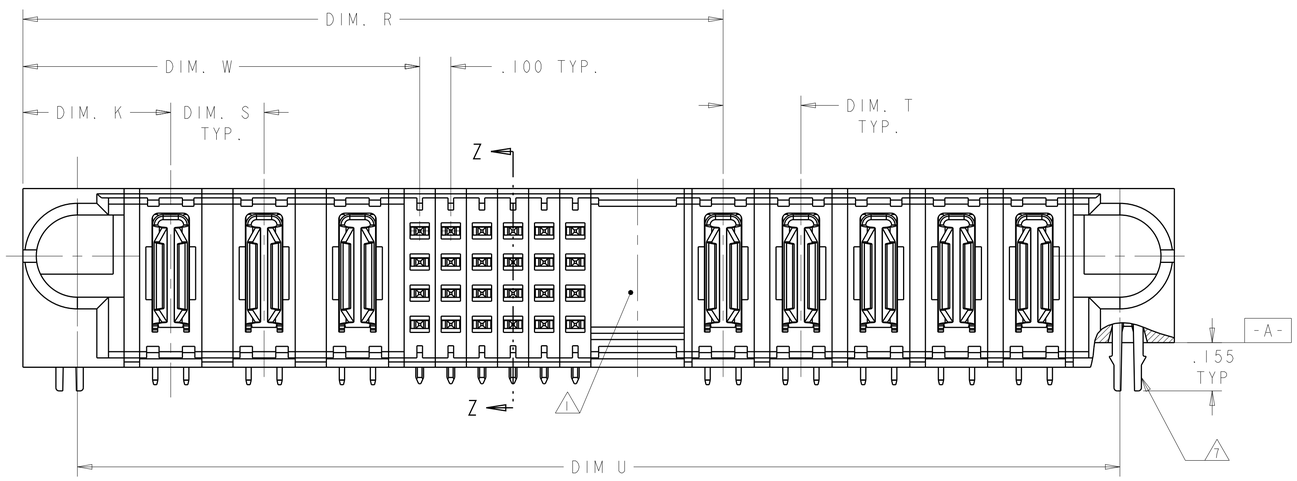

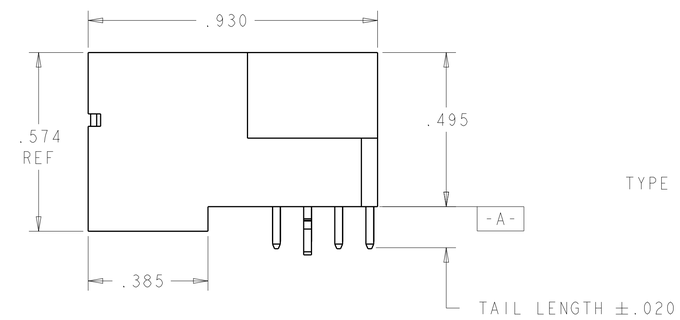

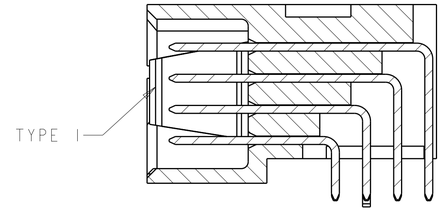

SECTION Z-Z

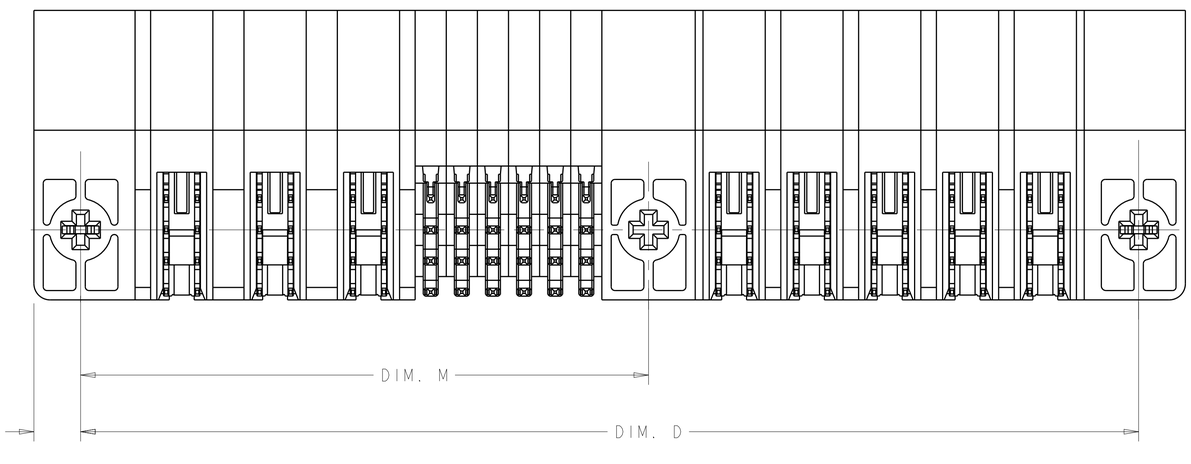

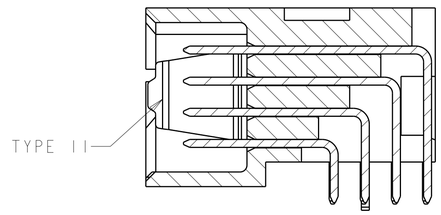

SECTION Z-Z

THIS DRAWING IS A CONTROLLED DOCUMENT.

DIMENSIONS: INCHES

TOLERANCES UNLESS OTHERWISE SPECIFIED:
0 PLC ±-
1 PLC ±-
2 PLC ±.01
3 PLC ±.005
4 PLC ±.0020
ANGLES ±2°

MATERIAL - 3
FINISH - 4

DWN R.GRZYBOWSKI 01MAR05
CHK M.PERCHERKE 01MAR05
APVD M.PERCHERKE -
PRODUCT SPEC 108-1973
APPLICATION SPEC 114-13038
WEIGHT -

TE Connectivity

NAME RIGHT ANGLE HEADER ASSEMBLY
DUAL BEAM POWER CONTACT
MULTI-BEAM XL

SIZE A1 | CAGE CODE - | DRAWING NO C-6600130 | RESTRICTED TO -

CUSTOMER DRAWING | SCALE 4:1 | SHEET 1 OF 13 | REV F5

4805 (3/13)

THIS DRAWING IS UNPUBLISHED. RELEASED FOR PUBLICATION 20
© COPYRIGHT 20 BY - ALL RIGHTS RESERVED.

REVISIONS

P	LTR	DESCRIPTION	DATE	DWN	APVD
	-	SEE SHEET 1	-	-	-

PWR CON TYPE	DIM U	DIM S	DIM T	DIM R	DIM W	DIM D	DIM M	DIM L	DIM K	DESCRIPTION	PART NUMBER
1	2.850	.300	.200	2.125	1.825	2.900	-	3.200	.450	7HDP + 8S + 3ACP	2-6600130-7
1	1.900	.300	.250	1.550	1.275	1.950	-	2.250	.475	3ACP + 8S + 2P	2-6600130-6
1	1.700	.250	.250	1.350	.875	1.750	-	2.050	.450	2P + 16S + 2P	2-6600130-5
1	1.800	.300	.300	1.375	1.025	1.850	-	2.150	.475	2ACP + 8S + 2ACP	2-6600130-4
1	2.400	.250	.250	1.550	.875	2.450	-	2.750	.450	2P + 24S + 4P	2-6600130-2
1	2.300	.200	.200	1.650	1.225	2.350	-	2.650	.450	4P + 12S + 4P	2-6600130-1
1	2.200	.250	.250	1.350	.875	2.250	-	2.550	.450	2P + 16S + 4P	2-6600130-0
1	2.325	.300	.250	1.975	1.600	2.375	-	2.675	.450	4ACP + 12S + 2P	1-6600130-9
1	2.900	.250	.250	2.050	1.375	2.950	-	3.250	.450	4P + 24S + 4P	1-6600130-8
1	4.400	.250	.250	2.800	2.125	4.450	-	4.750	.450	7P + 24S + 7P	1-6600130-7
1	5.400	.250	.250	3.300	2.625	5.450	-	5.750	.450	9P + 24S + 9P	1-6600130-6
1	2.200	.250	.250	1.350	.875	2.250	-	2.550	.450	2P + 16S + 4P	1-6600130-5
1	2.500	.250	.250	2.150	1.425	2.550	-	2.850	.450	4P + 24S + 2P	1-6600130-4
1	2.800	10	.250	2.450	1.975	2.850	-	3.150	.450	6P + 16S + 2P	1-6600130-3
11	3.200	.200	.200	2.125	1.575	3.250	-	3.550	.425	6P + 20S + 6P	1-6600130-1
1	5.450	10	10	3.075	2.425	5.500	-	5.800	.425	10P + 24S + 12P	6600130-8
1	3.650	.250	.250	2.550	1.875	3.700	-	4.000	.450	6P + 24S + 5P	6600130-6
1	4.350	.250	.250	3.000	2.125	4.400	-	4.700	.450	7P + 32S + 6P	6600130-5
1	5.100	.250	.250	3.250	2.375	5.150	-	5.450	.450	8P + 32S + 8P	6600130-4
1	7.400	.250	.250	5.050	2.875	7.450	-	7.750	.450	10P + 84S + 10P	6600130-3
1	3.300	.300	.250	1.950	1.275	3.350	-	3.650	.475	3ACP + 24S + 6P	6600130-2
1	3.050	.300	.250	1.950	1.275	3.100	-	3.400	.475	3ACP + 24S + 5P	6600130-1

THIS DRAWING IS A CONTROLLED DOCUMENT.

DIMENSIONS: INCHES

TOLERANCES UNLESS OTHERWISE SPECIFIED:
0 PLC ±-
1 PLC ±-
2 PLC ±.01
3 PLC ±.005
4 PLC ±.0020
ANGLES ±2°

MATERIAL - -
FINISH - -

DWN R.GRZYBOWSKI 01MAR05
CHK M.PERCHERKE 01MAR05
APVD M.PERCHERKE -
PRODUCT SPEC 108-1973
APPLICATION SPEC 114-13038
WEIGHT -

TE Connectivity

NAME RIGHT ANGLE HEADER ASSEMBLY DUAL BEAM POWER CONTACT MULTI-BEAM XL

SIZE	CAGE CODE	DRAWING NO	RESTRICTED TO
A1	-	C-6600130	-

CUSTOMER DRAWING SCALE 4:1 SHEET 2 OF 13 REV F5

4805 (3/13)

THIS DRAWING IS UNPUBLISHED. RELEASED FOR PUBLICATION 20
© COPYRIGHT 20 BY - ALL RIGHTS RESERVED.

REVISIONS

P	LTR	DESCRIPTION	DATE	DWN	APVD
	-	SEE SHEET 1	-	-	-

PART NUMBER	ROWS	POWER P1	POWER P2	POWER P3	SIGNAL 1	SIGNAL 2	SIGNAL 3	SIGNAL 4	SIGNAL 5	SIGNAL 6	POWER P4	POWER P5	POWER P6	POWER P7	POWER P8
6600130-1	D	PS	PS	PS	J	J	J	J	E	J	PS	PS	PS	PS	PS
	C				K	K	F	K	K	K					
	B				N	N	N	N	N	G					
	A				S	S	H	S	S	S					
3ACP + 24S + 5P		HD													HD

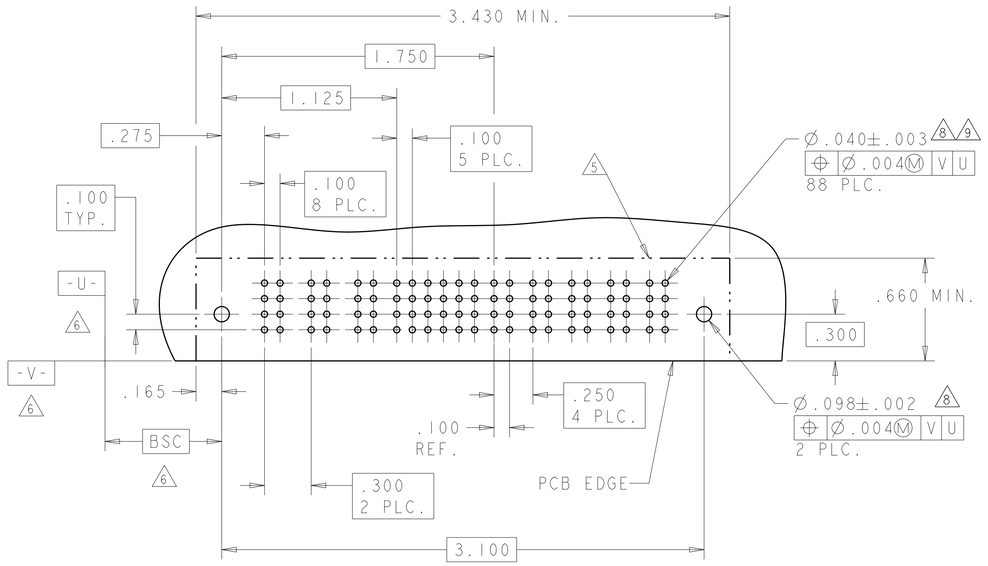

PART NUMBER	ROWS	POWER P1	POWER P2	POWER P3	SIGNAL 1	SIGNAL 2	SIGNAL 3	SIGNAL 4	SIGNAL 5	SIGNAL 6	POWER P4	POWER P5	POWER P6	POWER P7	POWER P8	POWER P9
6600130-2	D	PS	PS	PS	J	J	J	J	J	J	PS	PS	PS	PS	PS	PS
	C				K	K	K	K	K	K						
	B				N	N	N	N	N	N						
	A				H	S	S	S	S	S						
3ACP + 24S + 6P		HD														HD

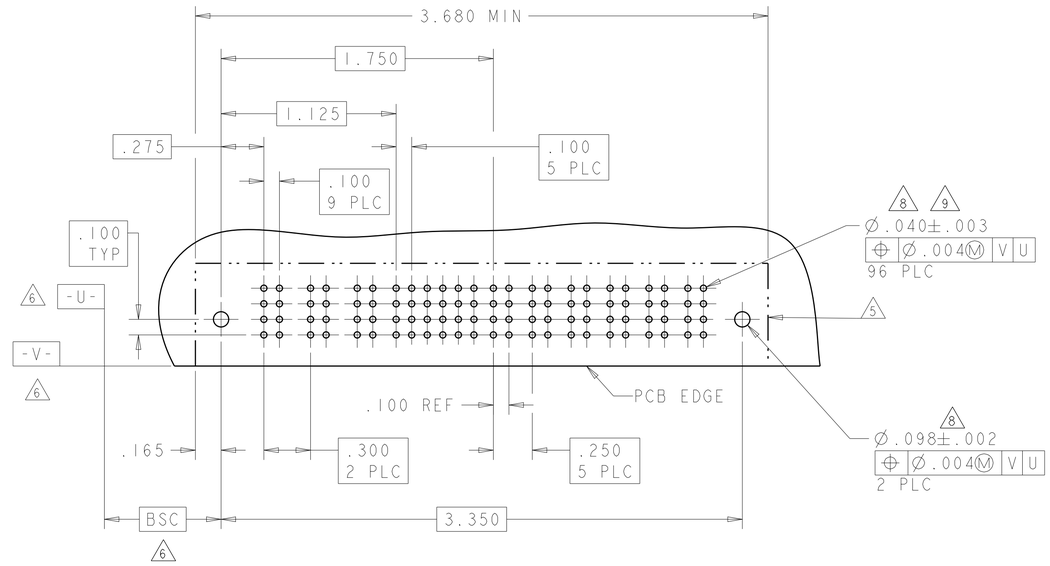

CODE	MATING SEQUENCE	TAIL LENGTH	ROW
FN	MFBL	.135	B
E	MLBF	.135	D
F	MLBF	.135	C
G	MLBF	.135	B
H	MLBF	.135	A
J	STD	.135	D
K	STD	.135	C
N	STD	.135	B
S	STD	.135	A

SIGNAL CONTACT

CODE	TAIL LENGTH	DESCRIPTION
TS	.135	DUAL-BEAM(II)
PS	.135	DUAL-BEAM(I)

POWER CONTACT

THIS DRAWING IS A CONTROLLED DOCUMENT.

DIMENSIONS: INCHES

TOLERANCES UNLESS OTHERWISE SPECIFIED:
0 PLC ±-
1 PLC ±-
2 PLC ±.01
3 PLC ±.005
4 PLC ±.0020
ANGLES ±2°

MATERIAL - -
FINISH - -

DWN R.GRZYBOWSKI 01MAR05
CHK M.PERCHERKE 01MAR05
APVD M.PERCHERKE -
PRODUCT SPEC 108-1973
APPLICATION SPEC 114-13038
WEIGHT -

TE Connectivity

NAME RIGHT ANGLE HEADER ASSEMBLY DUAL BEAM POWER CONTACT MULTI-BEAM XL

SIZE	CAGE CODE	DRAWING NO	RESTRICTED TO
A1	-	C-6600130	-

CUSTOMER DRAWING | SCALE 4:1 | SHEET 3 OF 13 | REV F5

4805 (3/13)

THIS DRAWING IS UNPUBLISHED. RELEASED FOR PUBLICATION 20
© COPYRIGHT 20 BY - ALL RIGHTS RESERVED.

REVISIONS

P	LTR	DESCRIPTION	DATE	DWN	APVD
	-	SEE SHEET 1	-	-	-

PART NUMBER	ROWS	POWER	SIGNAL	POWER
6600130-3	D C B A	P1 P2 P3 P4 P5 P6 P7 P8 P9 P10	1 2 3 4 5 6 7 8 9 10 11 12 13 14 15 16 17 18 19 20 21	P11 P12 P13 P14 P15 P16 P17 P18 P19 P20
10P + 84S + 10P		PS PS PS PS PS PS PS PS PS PS	J K N S	PS PS PS PS PS PS PS PS PS PS

HD

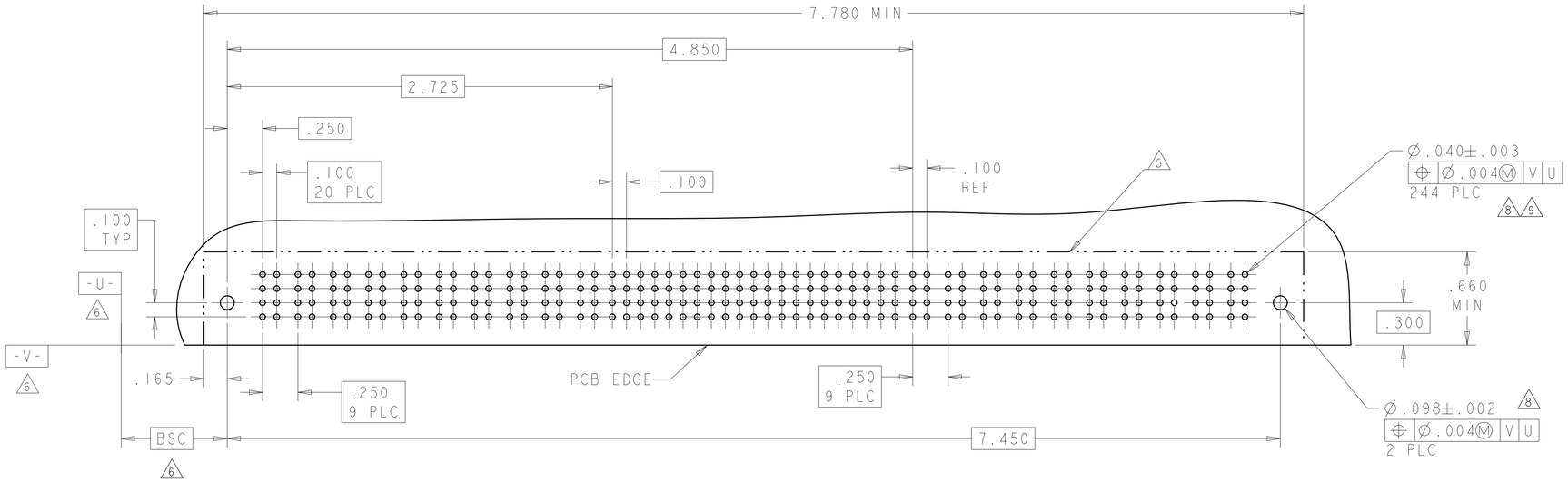

PART NUMBER	ROWS	POWER	SIGNAL	POWER
6600130-4	D C B A	P1 P2 P3 P4 P5 P6 P7 P8	1 2 3 4 5 6 7 8	P9 P10 P11 P12 P13 P14 P15 P16
8P + 32S + 8P		PS PS PS PS PS PS PS PS	J K N S	PS PS PS PS PS PS PS PS

HD

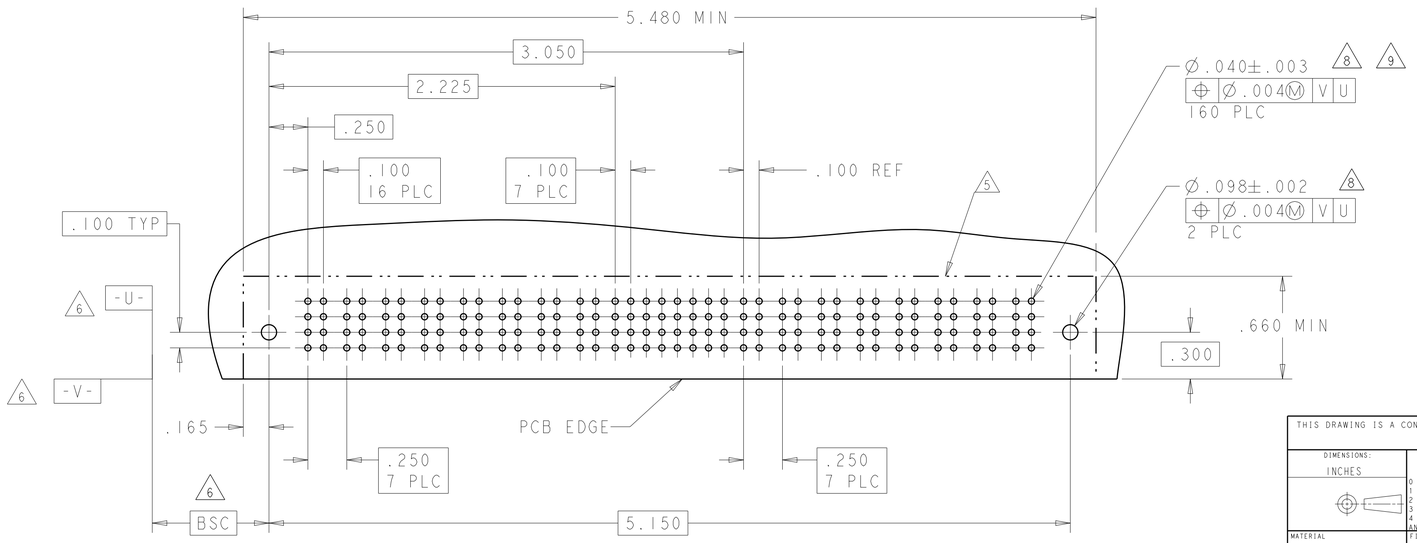

THIS DRAWING IS A CONTROLLED DOCUMENT.

DIMENSIONS: INCHES

TOLERANCES UNLESS OTHERWISE SPECIFIED:
0 PLC ±
1 PLC ±
2 PLC ±.01
3 PLC ±.005
4 PLC ±.0020
ANGLES ±2°

MATERIAL - -
FINISH - -

DWN R.GRZYBOWSKI 01MAR05
CHK M.PERCHERKE 01MAR05
APVD M.PERCHERKE -

PRODUCT SPEC 108-1973
APPLICATION SPEC 114-13038
WEIGHT -

TE Connectivity

NAME RIGHT ANGLE HEADER ASSEMBLY DUAL BEAM POWER CONTACT MULTI-BEAM XL

SIZE	CAGE CODE	DRAWING NO	RESTRICTED TO
A1	-	C-6600130	-

CUSTOMER DRAWING SCALE 4:1 SHEET 4 OF 13 REV F5

4805 (3/13)

THIS DRAWING IS UNPUBLISHED. RELEASED FOR PUBLICATION 20
© COPYRIGHT 20 BY - ALL RIGHTS RESERVED.

REVISIONS

P	LTR	DESCRIPTION	DATE	DWN	APVD
	-	SEE SHEET 1	-	-	-

PART NUMBER	ROWS	POWER							SIGNAL								POWER					
		P1	P2	P3	P4	P5	P6	P7	1	2	3	4	5	6	7	8	P8	P9	P10	P11	P12	P13
6600130-5	D	PS	PS	PS	PS	PS	PS	PS	J	J	J	J	E	J	J	J	PS	PS	PS	PS	PS	PS
	C								K	K	F	K	K	K	K	K						
	B								N	N	N	N	N	G	N	N						
	A								S	S	H	S	S	S	S	S						
7P + 32S + 6P		HD																				HD

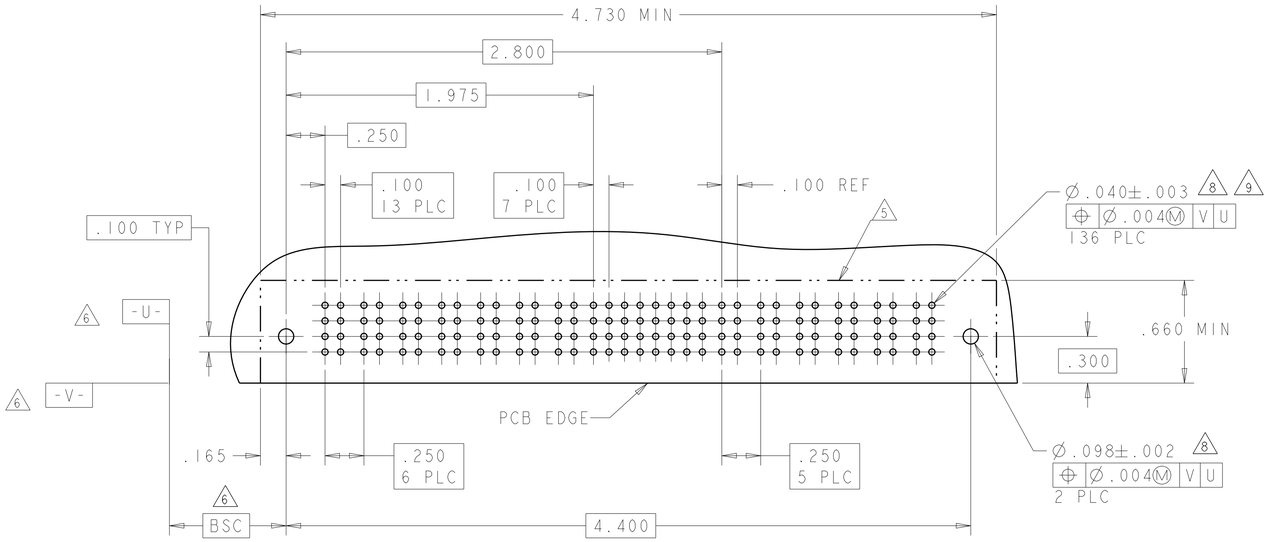

PART NUMBER	ROWS	POWER						SIGNAL						POWER										
		P1	P2	P3	P4	P5	P6	1	2	3	4	5	6	P7	P8	P9	P10	P11	P12	P13	P14	P15	P16	P17
6600130-6	D	PS	PS	PS	PS	PS	PS	J	J	J	J	E	J	PS	PS	PS	PS	PS	PS	PS	PS	PS	PS	PS
	C							K	K	F	K	K	K											
	B							N	N	N	N	N	G											
	A							S	S	H	S	S	S											
6P + 24S + 5P		HD																						HD

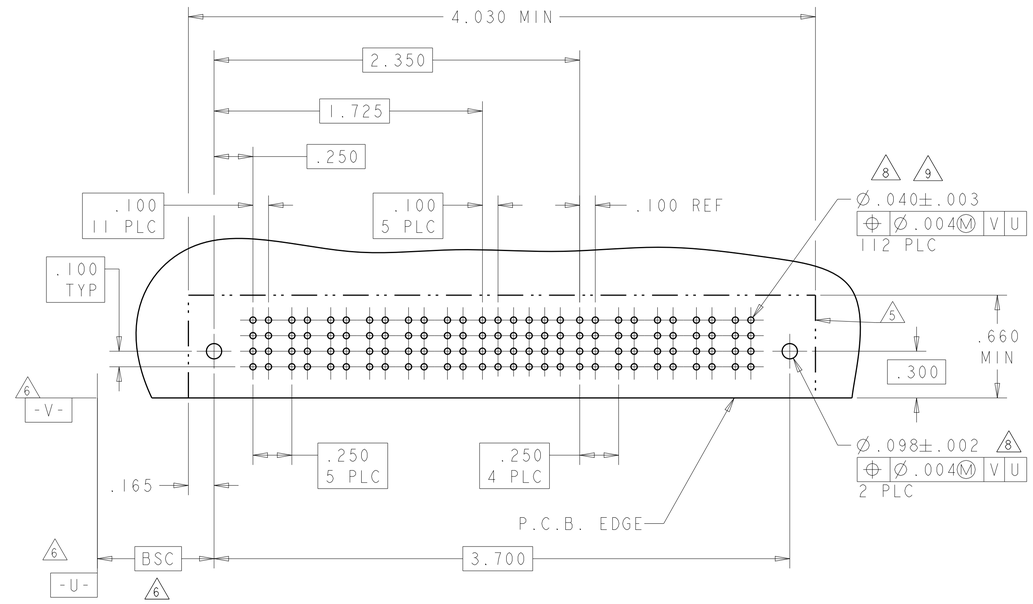

PART NUMBER	ROWS	POWER										SIGNAL						POWER										
		P1	P2	P3	P4	P5	P6	P7	P8	P9	P10	1	2	3	4	5	6	P11	P12	P13	P14	P15	P16	P17	P18	P19	P20	P21	P22
6600130-8	D	PS	PS	PS	PS	PS	PS	PS	PS	PS	PS	J	J	J	J	J	J	PS	PS	PS	PS	PS	PS	PS	PS	PS	PS	PS	PS
	C											K	K	K	K	K	K												
	B											N	N	N	N	N	N												
	A											S	H	S	S	S	S												
10P + 24S + 12P		HD																											HD

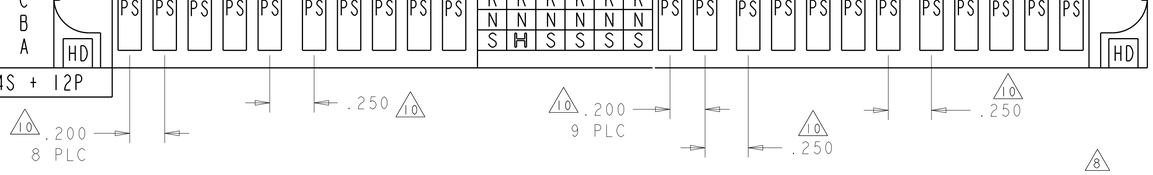

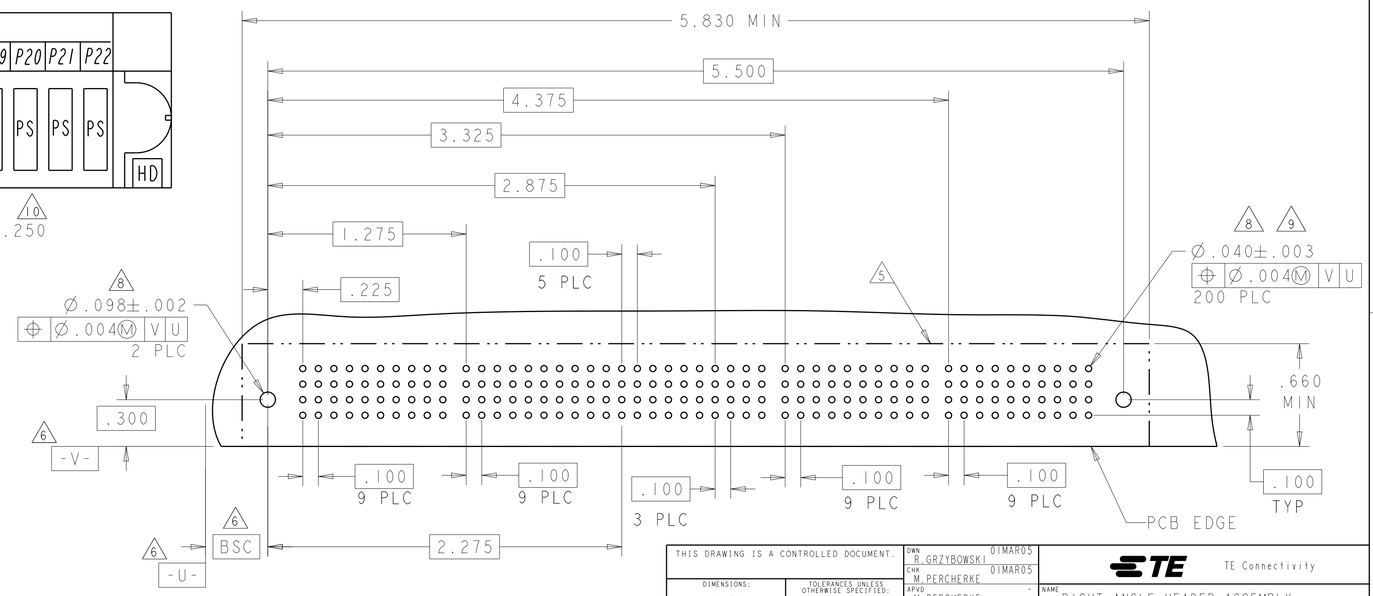

THIS DRAWING IS A CONTROLLED DOCUMENT.

DIMENSIONS: INCHES

TOLERANCES UNLESS OTHERWISE SPECIFIED:
0 PLC ±-
1 PLC ±-
2 PLC ±.01
3 PLC ±.005
4 PLC ±.0020
ANGLES ±2°

MATERIAL - -
FINISH - -

DWN R.GRZYBOWSKI 01MAR05
CHK M.PERCHERKE 01MAR05
APVD M.PERCHERKE -
PRODUCT SPEC 108-1973
APPLICATION SPEC 114-13038
WEIGHT -

TE Connectivity

NAME RIGHT ANGLE HEADER ASSEMBLY DUAL BEAM POWER CONTACT MULTI-BEAM XL

SIZE A1 | CAGE CODE - | DRAWING NO C-6600130 | RESTRICTED TO -

CUSTOMER DRAWING | SCALE 4:1 | SHEET 5 OF 13 | REV F5

4805 (3/13)

THIS DRAWING IS UNPUBLISHED. RELEASED FOR PUBLICATION 20
© COPYRIGHT 20 BY - ALL RIGHTS RESERVED.

REVISIONS

P	LTR	DESCRIPTION	DATE	DWN	APVD
	-	SEE SHEET 1	-	-	-

PART NUMBER	ROWS	POWER						SIGNAL					POWER					
		P1	P2	P3	P4	P5	P6	1	2	3	4	5	P7	P8	P9	P10	P11	P12
1-6600130-1	D C B A	TS	TS	TS	TS	TS	TS	E F G H	J K N S	J K N S	J K N N	J K N H	TS	TS	TS	TS	TS	TS
6P + 20S + 6P		HD																HD

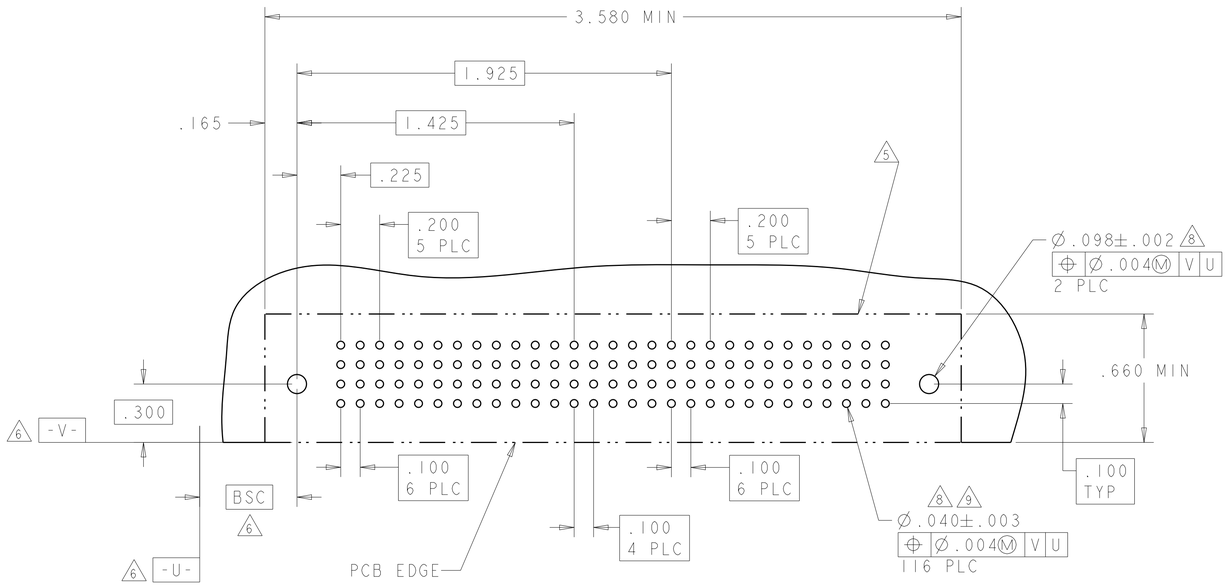

PART NUMBER	ROWS	POWER						SIGNAL				POWER	
		P1	P2	P3	P4	P5	P6	1	2	3	4	P7	P8
1-6600130-3	D C B A	PS	PS	PS	PS	PS	PS	E F N H	E F N H	E F N H	E F N H	PS	PS
6P + 16S + 2P		HD											HD

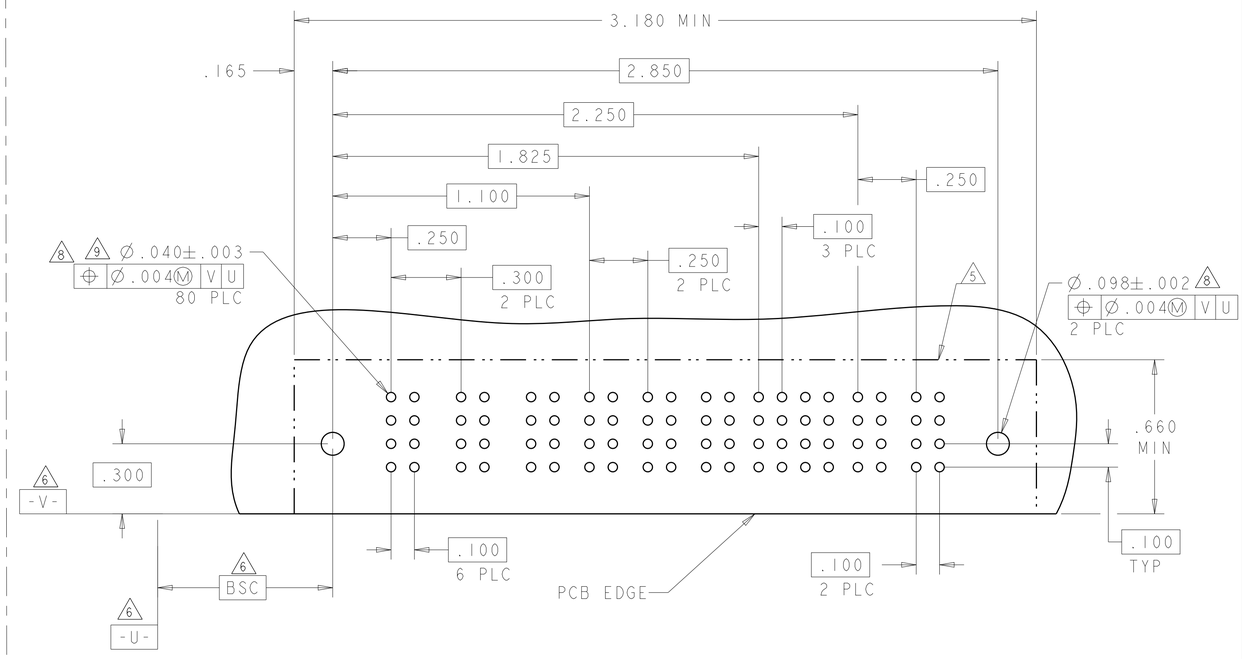

THIS DRAWING IS A CONTROLLED DOCUMENT.

DIMENSIONS: INCHES

TOLERANCES UNLESS OTHERWISE SPECIFIED:
0 PLC ±-
1 PLC ±-
2 PLC ±.01
3 PLC ±.005
4 PLC ±.0020
ANGLES ±2°

MATERIAL - -
FINISH - -

DWN R.GRZYBOWSKI 01MAR05
CHK M.PERCHERKE 01MAR05
APVD M.PERCHERKE -
PRODUCT SPEC 108-1973
APPLICATION SPEC 114-13038
WEIGHT -

TE Connectivity

NAME RIGHT ANGLE HEADER ASSEMBLY DUAL BEAM POWER CONTACT MULTI-BEAM XL

SIZE A1 | CAGE CODE - | DRAWING NO C-6600130 | RESTRICTED TO -

CUSTOMER DRAWING | SCALE 4:1 | SHEET 6 OF 13 | REV F5

4805 (3/13)

THIS DRAWING IS UNPUBLISHED. RELEASED FOR PUBLICATION 20
© COPYRIGHT 20 BY - ALL RIGHTS RESERVED.

REVISIONS

P	LTR	DESCRIPTION	DATE	DWN	APVD
	-	SEE SHEET 1	-	-	-

PART NUMBER	ROWS	POWER P1	POWER P2	POWER P3	POWER P4	SIGNAL 1	SIGNAL 2	SIGNAL 3	SIGNAL 4	SIGNAL 5	SIGNAL 6	POWER P5	POWER P6
1-6600130-4	D C B A	PS	PS	PS	PS	J K N S	J K N S	J K N S	J K N S	J K N S	J K N S	PS	PS
4P + 24S + 2P		HD											HD

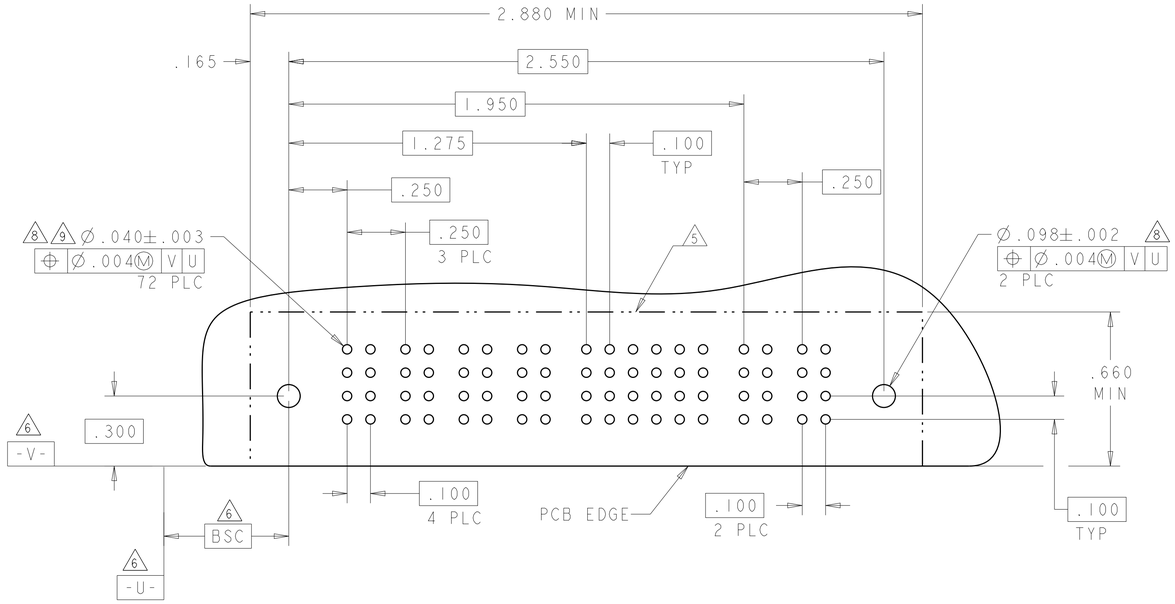

PART NUMBER	ROWS	POWER P1	POWER P2	SIGNAL 1	SIGNAL 2	SIGNAL 3	SIGNAL 4	POWER P5	POWER P6	POWER P5	POWER P6
1-6600130-5	D C B A	PS	PS	J K N S	J K N S	J K N S	J K FN S	PS	PS	PS	PS
2P + 24S + 4P		HD									HD

PART NUMBER	ROWS	POWER P1	POWER P2	SIGNAL 1	SIGNAL 2	SIGNAL 3	SIGNAL 4	POWER P5	POWER P6	POWER P5	POWER P6
2-6600130-0	D C B A	PS	PS	J K FN S	J K FN S	J K FN S	J K FN S	PS	PS	PS	PS
2P + 16S + 4P		HD									HD

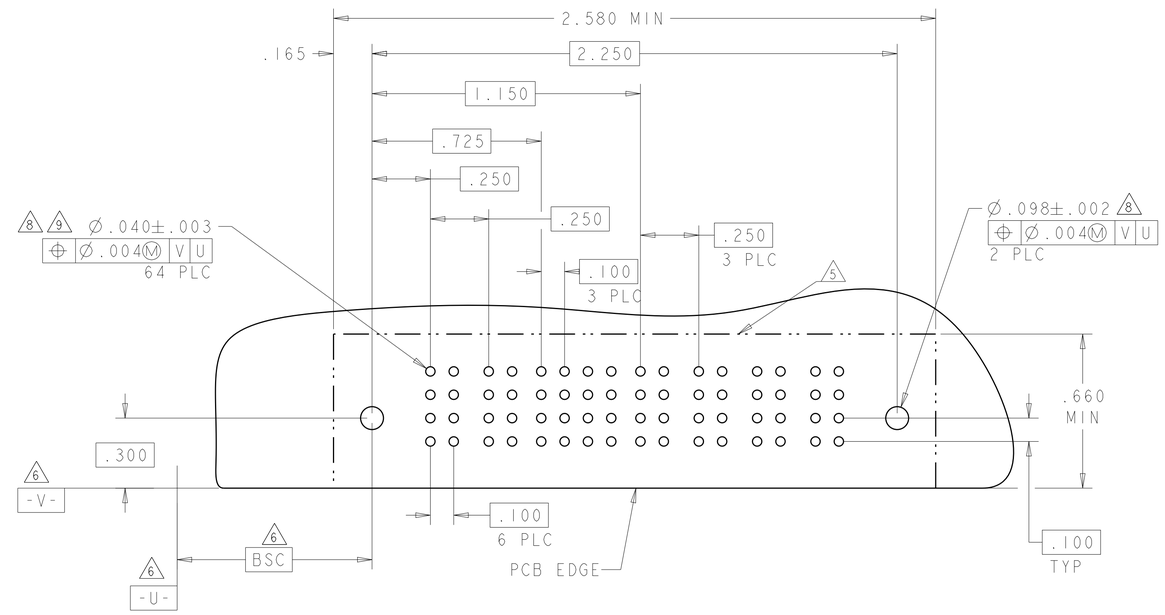

1-6600130-5 AND 2-66600130-0 PCB LAYOUT

THIS DRAWING IS A CONTROLLED DOCUMENT.

DIMENSIONS: INCHES

TOLERANCES UNLESS OTHERWISE SPECIFIED:
0 PLC ±-
1 PLC ±-
2 PLC ±.01
3 PLC ±.005
4 PLC ±.0020
ANGLES ±2°

MATERIAL - -
FINISH - -

DWN R.GRZYBOWSKI 01MAR05
CHK M.PERCHERKE 01MAR05
APVD M.PERCHERKE -
PRODUCT SPEC 108-1973
APPLICATION SPEC 114-13038
WEIGHT -

TE Connectivity

NAME RIGHT ANGLE HEADER ASSEMBLY DUAL BEAM POWER CONTACT MULTI-BEAM XL

SIZE	CAGE CODE	DRAWING NO	RESTRICTED TO
A1	-	C-6600130	-

CUSTOMER DRAWING

SCALE	SHEET	OF	REV
4:1	7	13	F5

4805 (3/13)

THIS DRAWING IS UNPUBLISHED. RELEASED FOR PUBLICATION 20
© COPYRIGHT 20 BY - ALL RIGHTS RESERVED.

REVISIONS

P	LTR	DESCRIPTION	DATE	DWN	APVD
	-	SEE SHEET 1	-	-	-

PART NUMBER	ROWS	POWER									SIGNAL						POWER								
		P1	P2	P3	P4	P5	P6	P7	P8	P9	1	2	3	4	5	6	P10	P11	P12	P13	P14	P15	P16	P17	P18
1-6600130-6	D C B A	PS	PS	PS	PS	PS	PS	PS	PS	PS	J K N S	J K N S	J K N S	J K N S	J K N S	J K N S	PS	PS	PS	PS	PS	PS	PS	PS	PS
9P + 24S + 9P		HD																							HD

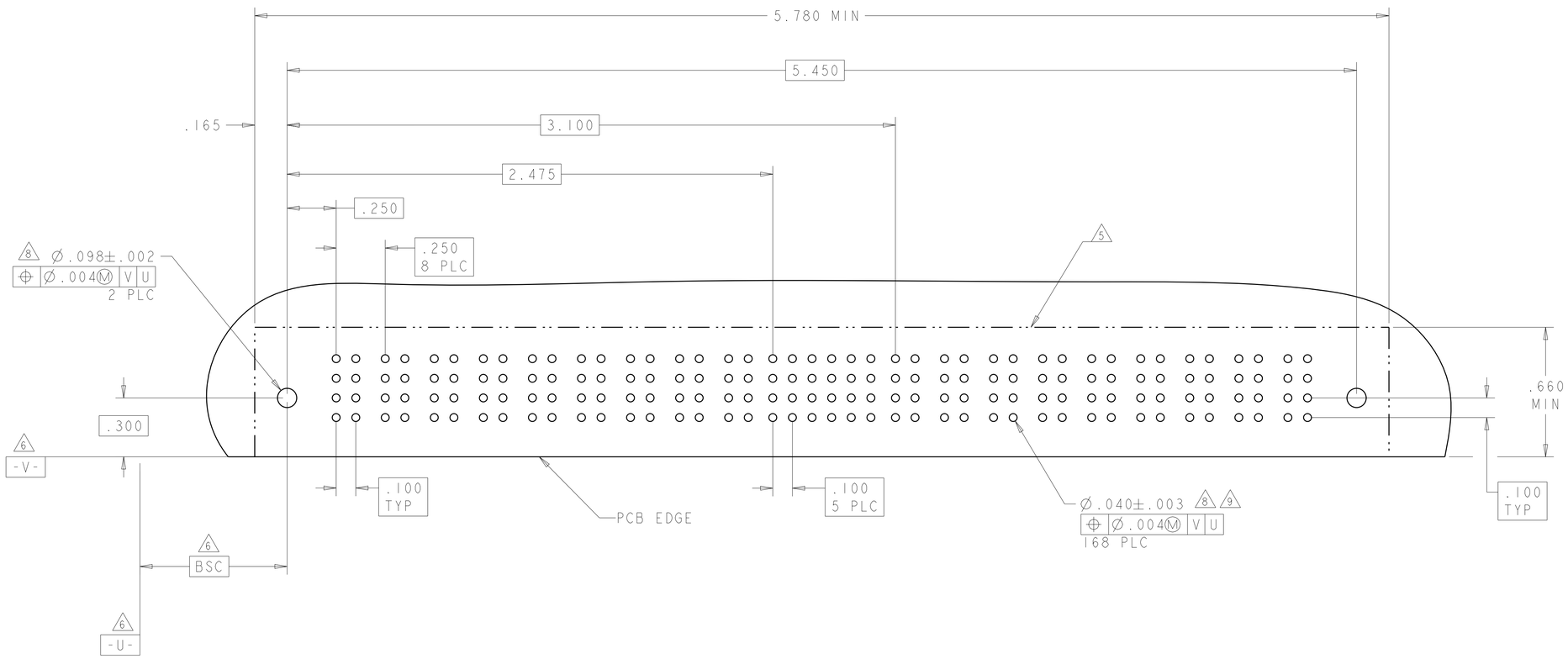

THIS DRAWING IS A CONTROLLED DOCUMENT.

DIMENSIONS: INCHES

TOLERANCES UNLESS OTHERWISE SPECIFIED:
0 PLC ±-
1 PLC ±-
2 PLC ±.01
3 PLC ±.005
4 PLC ±.0020
ANGLES ±2°

MATERIAL - -
FINISH - -

DWN 01MAR05 R GRZYBOWSKI
CHK 01MAR05 M PERCHERKE
APVD - M PERCHERKE
PRODUCT SPEC 108-1973
APPLICATION SPEC 114-13038
WEIGHT -

TE Connectivity

NAME RIGHT ANGLE HEADER ASSEMBLY DUAL BEAM POWER CONTACT MULTI-BEAM XL

SIZE A1 | CAGE CODE - | DRAWING NO C-6600130 | RESTRICTED TO -

CUSTOMER DRAWING | SCALE 4:1 | SHEET 8 OF 13 | REV F5

4805 (3/13)

THIS DRAWING IS UNPUBLISHED. RELEASED FOR PUBLICATION 20
© COPYRIGHT 20 BY - ALL RIGHTS RESERVED.

REVISIONS

P	LTR	DESCRIPTION	DATE	DWN	APVD
	-	SEE SHEET 1	-	-	-

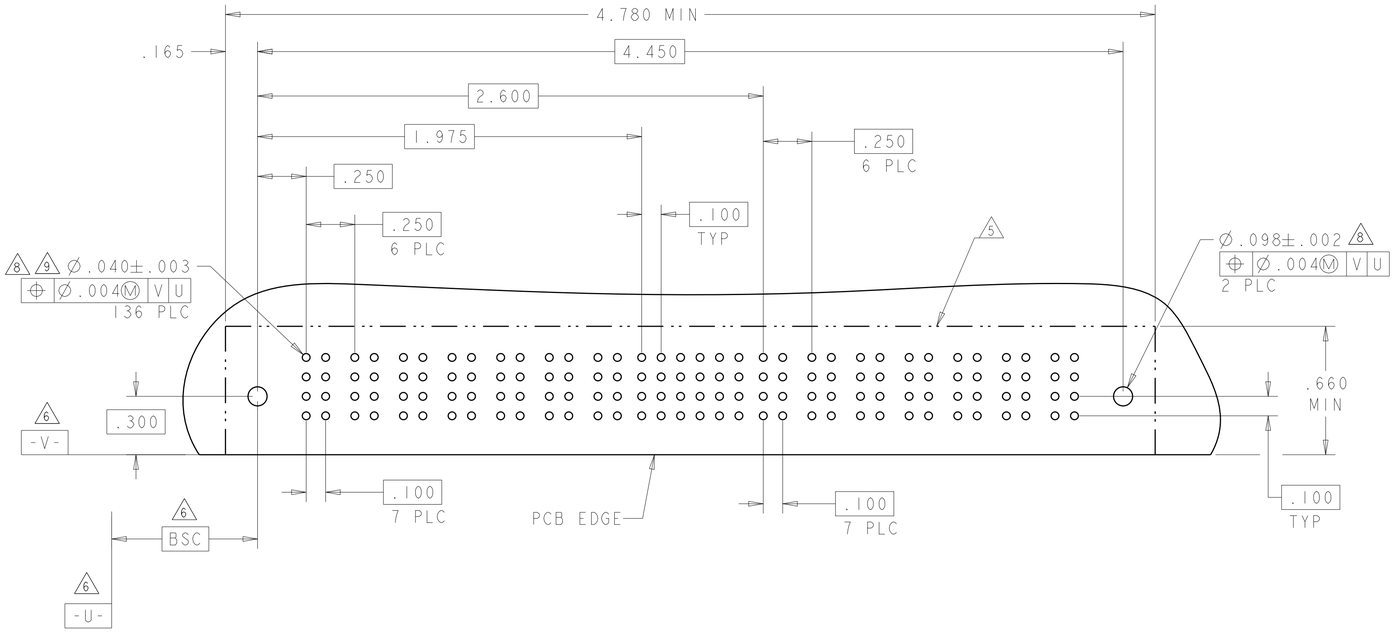

PART NUMBER	ROWS		POWER							SIGNAL						POWER							
			P1	P2	P3	P4	P5	P6	P7	1	2	3	4	5	6	P8	P9	P10	P11	P12	P13	P14	
1-6600130-7	D C B A	HD	PS	PS	PS	PS	PS	PS	PS	J K N S	J K N S	J K N S	J K N S	J K N S	J K N S	PS	PS	PS	PS	PS	PS	PS	HD
7P + 24S + 7P																							

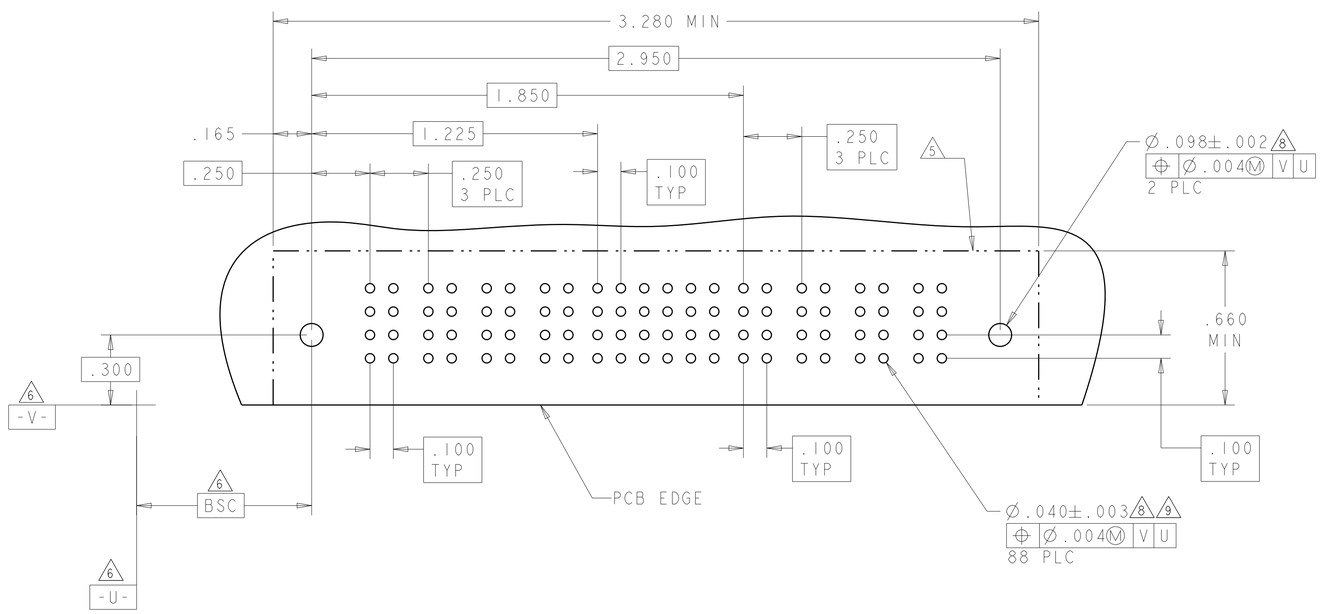

PART NUMBER	ROWS		POWER				SIGNAL						POWER					
			P1	P2	P3	P4	1	2	3	4	5	6	P5	P6	P7	P8		
1-6600130-8	D C B A	HD	PS	PS	PS	PS	J K N S	J K N S	J K N S	J K N S	J K N S	J K N S	PS	PS	PS	PS	HD	
4P + 24S + 4P																		

THIS DRAWING IS A CONTROLLED DOCUMENT.

DIMENSIONS: INCHES

TOLERANCES UNLESS OTHERWISE SPECIFIED:
0 PLC ±-
1 PLC ±-
2 PLC ±.01
3 PLC ±.005
4 PLC ±.0020
ANGLES ±2°

MATERIAL - -

FINISH - -

DWN 01MAR05 R GRZYBOWSKI
CHK 01MAR05 M PERCHERKE
APVD - M PERCHERKE
PRODUCT SPEC 108-1973
APPLICATION SPEC 114-13038
WEIGHT -

CUSTOMER DRAWING

TE Connectivity

NAME RIGHT ANGLE HEADER ASSEMBLY DUAL BEAM POWER CONTACT MULTI-BEAM XL

SIZE	CAGE CODE	DRAWING NO	RESTRICTED TO
A1	-	C-6600130	-

SCALE 4:1 SHEET 9 OF 13 REV F5

4805 (3/13)

THIS DRAWING IS UNPUBLISHED. RELEASED FOR PUBLICATION 20
© COPYRIGHT 20 BY - ALL RIGHTS RESERVED.

REVISIONS

P	LTR	DESCRIPTION	DATE	DWN	APVD
	-	SEE SHEET 1	-	-	-

PART NUMBER	ROWS	POWER P1	POWER P2	POWER P3	POWER P4	SIGNAL 1	SIGNAL 2	SIGNAL 3	POWER P5	POWER P6
1-6600130-9	D C B A	PS	PS	PS	PS	E F N H	E F N H	E F N H	PS	PS
4ACP + 12S + 2P										

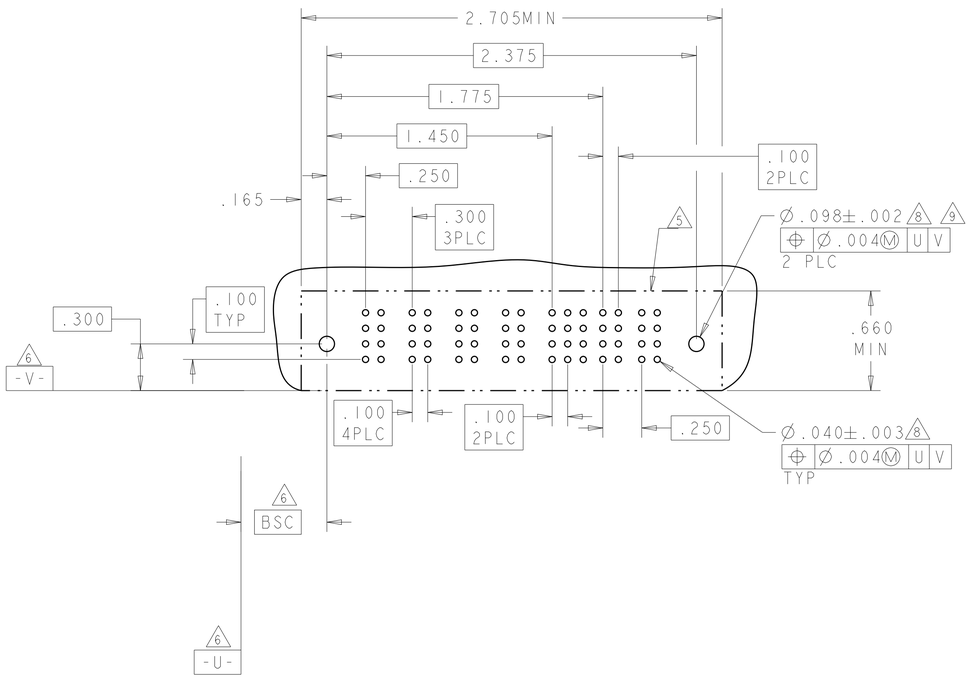

PART NUMBER	ROWS	POWER P1	POWER P2	POWER P3	POWER P4	SIGNAL 1	SIGNAL 2	SIGNAL 3	POWER P5	POWER P6	POWER P7	POWER P8
2-6600130-1	D C B A	PS	PS	PS	PS	J K N S	J F N S	J K N S	PS	PS	PS	PS
4P + 12S + 4P												

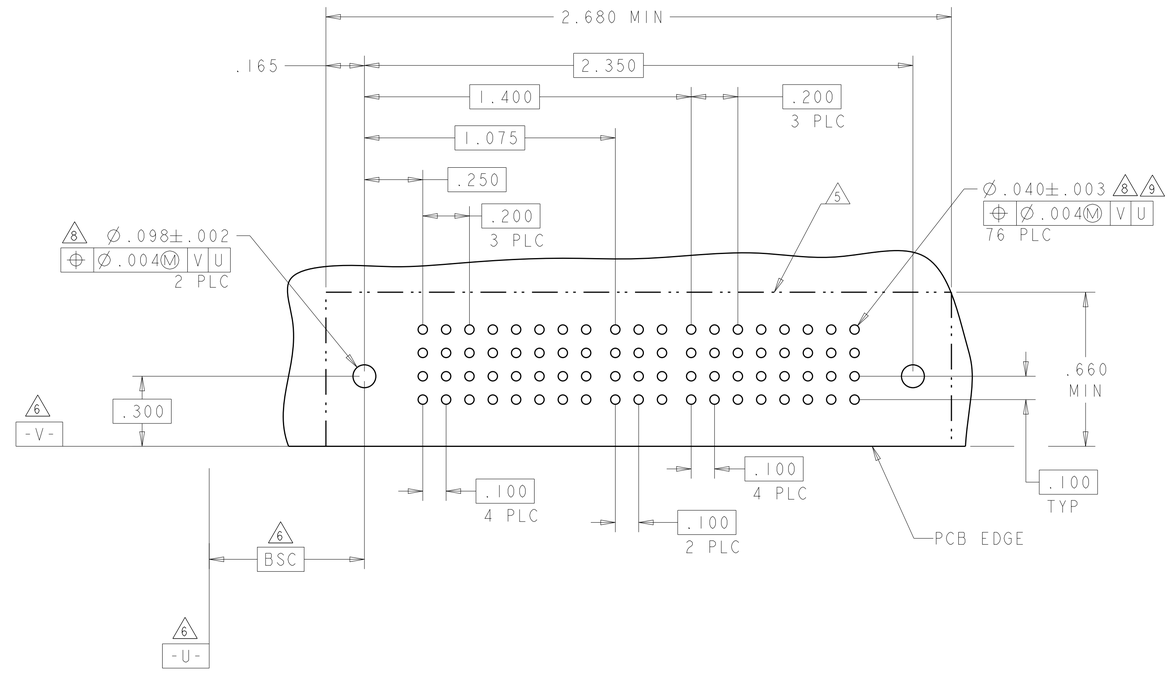

THIS DRAWING IS A CONTROLLED DOCUMENT.

DIMENSIONS: INCHES

TOLERANCES UNLESS OTHERWISE SPECIFIED:
0 PLC ±-
1 PLC ±-
2 PLC ±.01
3 PLC ±.005
4 PLC ±.0020
ANGLES ±2°

MATERIAL -
FINISH -

DWN R.GRZYBOWSKI 01MAR05
CHK M.PERCHERKE 01MAR05
APVD M.PERCHERKE -
PRODUCT SPEC 108-1973
APPLICATION SPEC 114-13038
WEIGHT -

TE Connectivity

NAME RIGHT ANGLE HEADER ASSEMBLY DUAL BEAM POWER CONTACT MULTI-BEAM XL

SIZE	CAGE CODE	DRAWING NO	RESTRICTED TO
A1	-	C-6600130	-

CUSTOMER DRAWING SCALE 4:1 SHEET 10 OF 13 REV F5

THIS DRAWING IS UNPUBLISHED. RELEASED FOR PUBLICATION 20
© COPYRIGHT 20 BY - ALL RIGHTS RESERVED.

REVISIONS

P	LTR	DESCRIPTION	DATE	DWN	APVD
	-	SEE SHEET 1	-	-	-

PART NUMBER	ROWS		POWER P1	POWER P2	SIGNAL 1	SIGNAL 2	SIGNAL 3	SIGNAL 4	SIGNAL 5	SIGNAL 6	POWER P3	POWER P4	POWER P5	POWER P6	
2-6600130-2	D		PS	PS	J	J	J	J	J	J	PS	PS	PS	PS	
	C				K	K	K	K	K	K					
	B				N	N	N	N	N	N					
	A	HD			S	S	S	S	S	S					HD

2P + 24S + 4P

PART NUMBER	ROWS		POWER P1	POWER P2	SIGNAL 1	SIGNAL 2	POWER P3	POWER P4	
2-6600130-4	D		PS	PS	J	J	PS	PS	
	C				K	K			
	B				N	N			
	A	HD			S	S			HD

2ACP + 8S + 2ACP

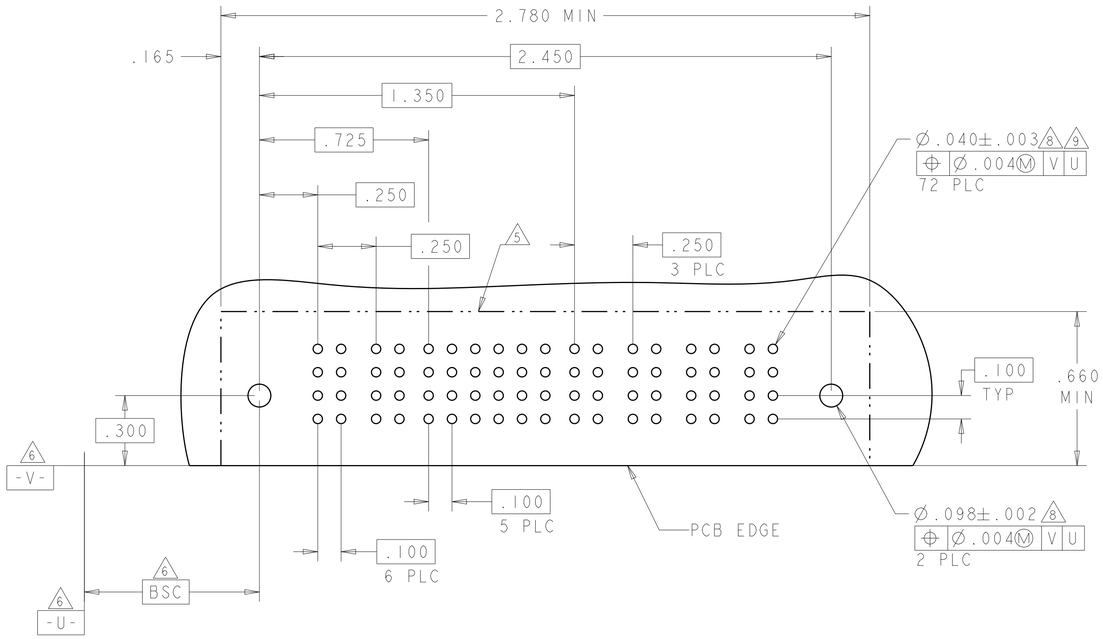

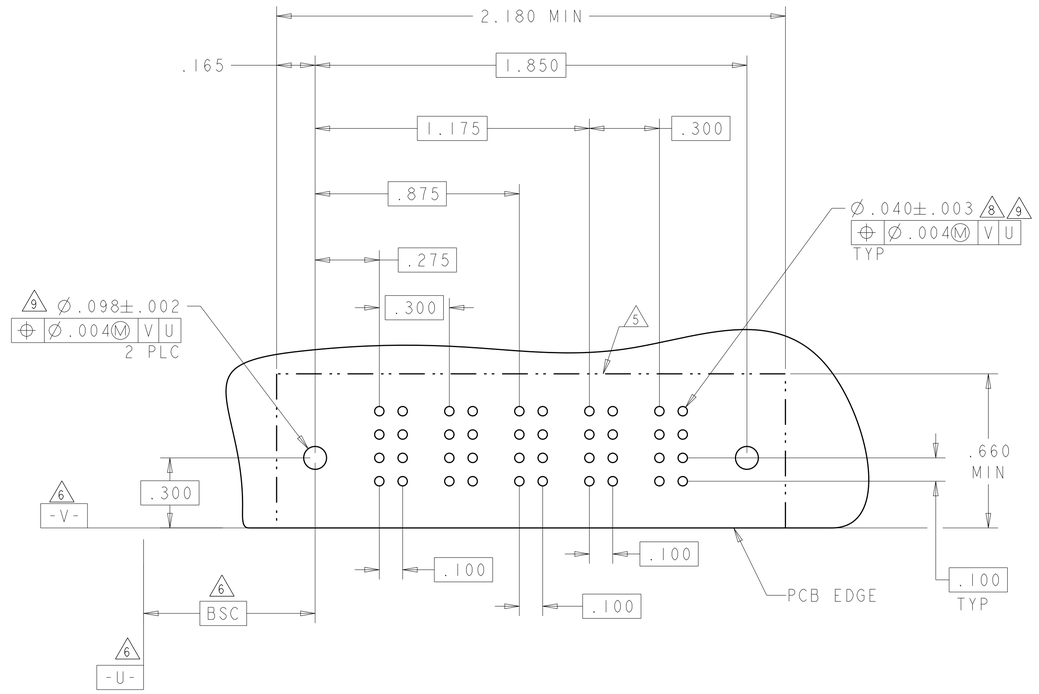

THIS DRAWING IS A CONTROLLED DOCUMENT.

DIMENSIONS: INCHES

TOLERANCES UNLESS OTHERWISE SPECIFIED:
0 PLC ±-
1 PLC ±-
2 PLC ±.01
3 PLC ±.005
4 PLC ±.0020
ANGLES ±2°

MATERIAL - -
FINISH - -

DWN 01MAR05 R.GRZYBOWSKI
CHK 01MAR05 M.PERCHERKE
APVD - M.PERCHERKE
PRODUCT SPEC 108-1973
APPLICATION SPEC 114-13038
WEIGHT -

TE Connectivity

NAME RIGHT ANGLE HEADER ASSEMBLY DUAL BEAM POWER CONTACT MULTI-BEAM XL

SIZE	CAGE CODE	DRAWING NO	RESTRICTED TO
A1	-	C-6600130	-

CUSTOMER DRAWING | SCALE 4:1 | SHEET 11 OF 13 | REV F5

4805 (3/13)

THIS DRAWING IS UNPUBLISHED. RELEASED FOR PUBLICATION 20
© COPYRIGHT 20 BY - ALL RIGHTS RESERVED.

REVISIONS

P	LTR	DESCRIPTION	DATE	DWN	APVD
	-	SEE SHEET 1	-	-	-

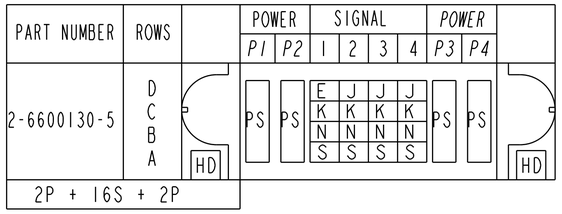

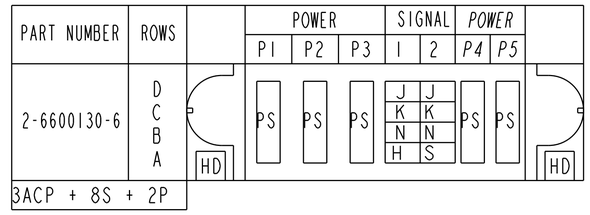

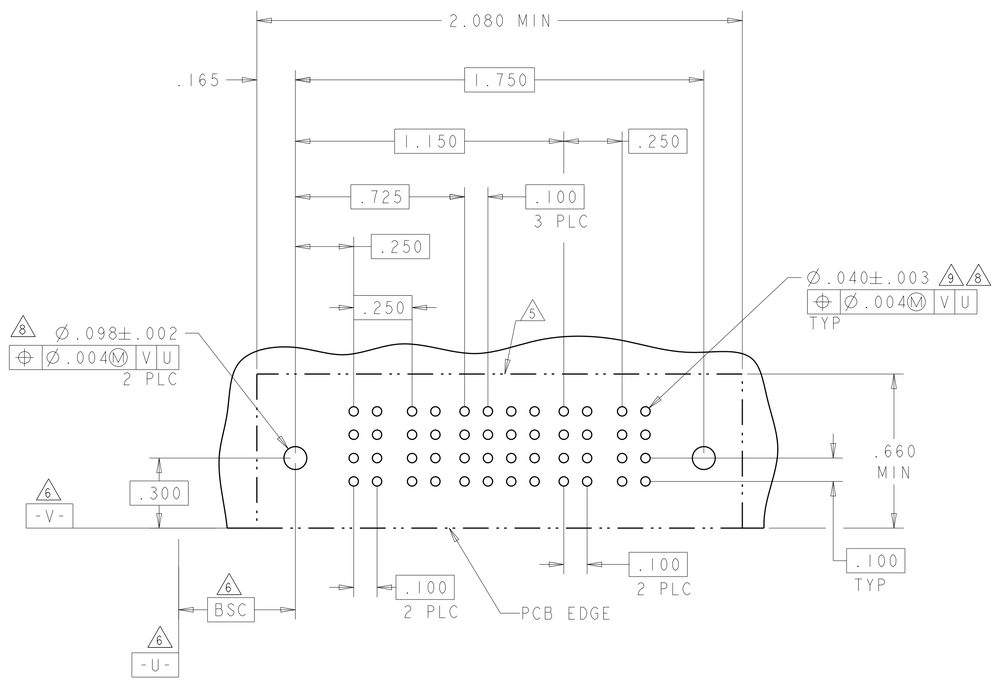

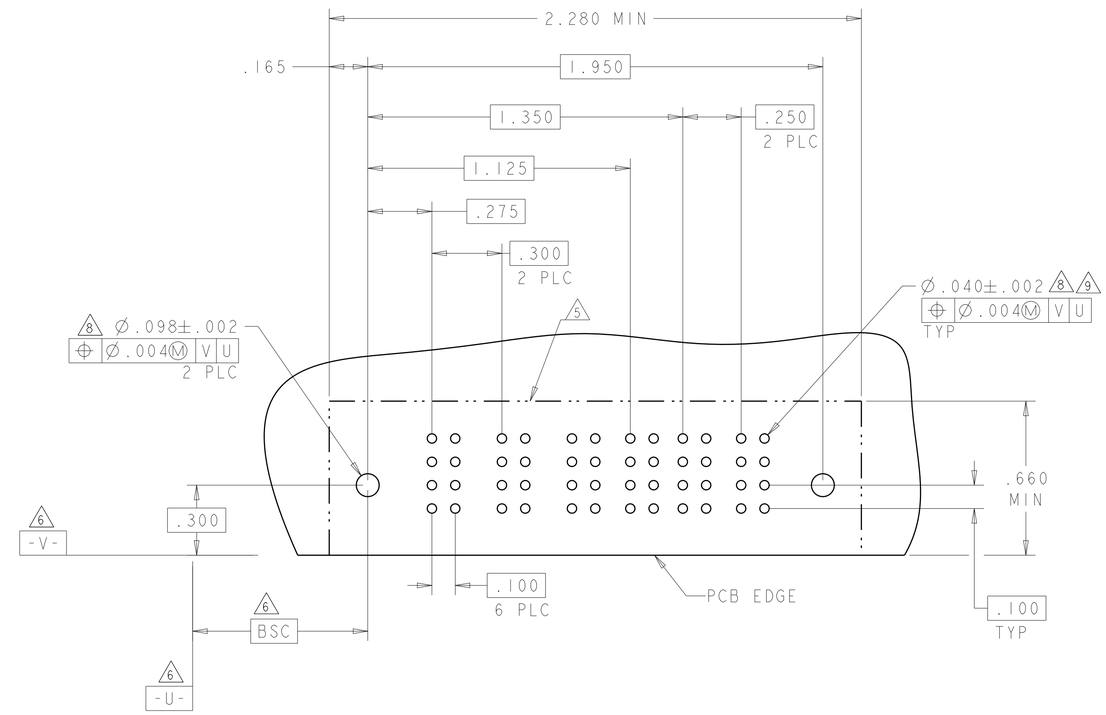

THIS DRAWING IS A CONTROLLED DOCUMENT.

DIMENSIONS: INCHES

TOLERANCES UNLESS OTHERWISE SPECIFIED:
0 PLC ±-
1 PLC ±-
2 PLC ±.01
3 PLC ±.005
4 PLC ±.0020
ANGLES ±2°

MATERIAL - -
FINISH - -

DWN R.GRZYBOWSKI 01MAR05
CHK M.PERCHERKE 01MAR05
APVD M.PERCHERKE -
PRODUCT SPEC 108-1973
APPLICATION SPEC 114-13038
WEIGHT -

CUSTOMER DRAWING

TE Connectivity

NAME RIGHT ANGLE HEADER ASSEMBLY DUAL BEAM POWER CONTACT MULTI-BEAM XL

SIZE A1 | CAGE CODE - | DRAWING NO C-6600130 | RESTRICTED TO -

SCALE 4:1 | SHEET 12 OF 13 | REV F5

4805 (3/13)

THIS DRAWING IS UNPUBLISHED. RELEASED FOR PUBLICATION 20
© COPYRIGHT 20 BY - ALL RIGHTS RESERVED.

REVISIONS

P	LTR	DESCRIPTION	DATE	DWN	APVD
	-	SEE SHEET 1	-	-	-

PART NUMBER	ROWS
2-6600130-7	D C B A
7HDP + 8S + 3ACP	

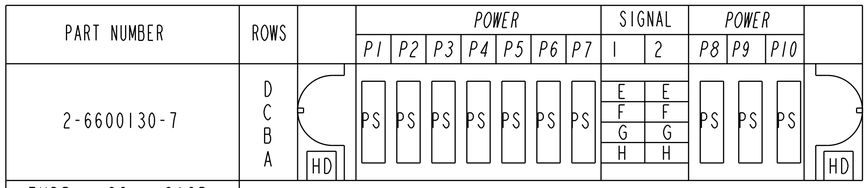

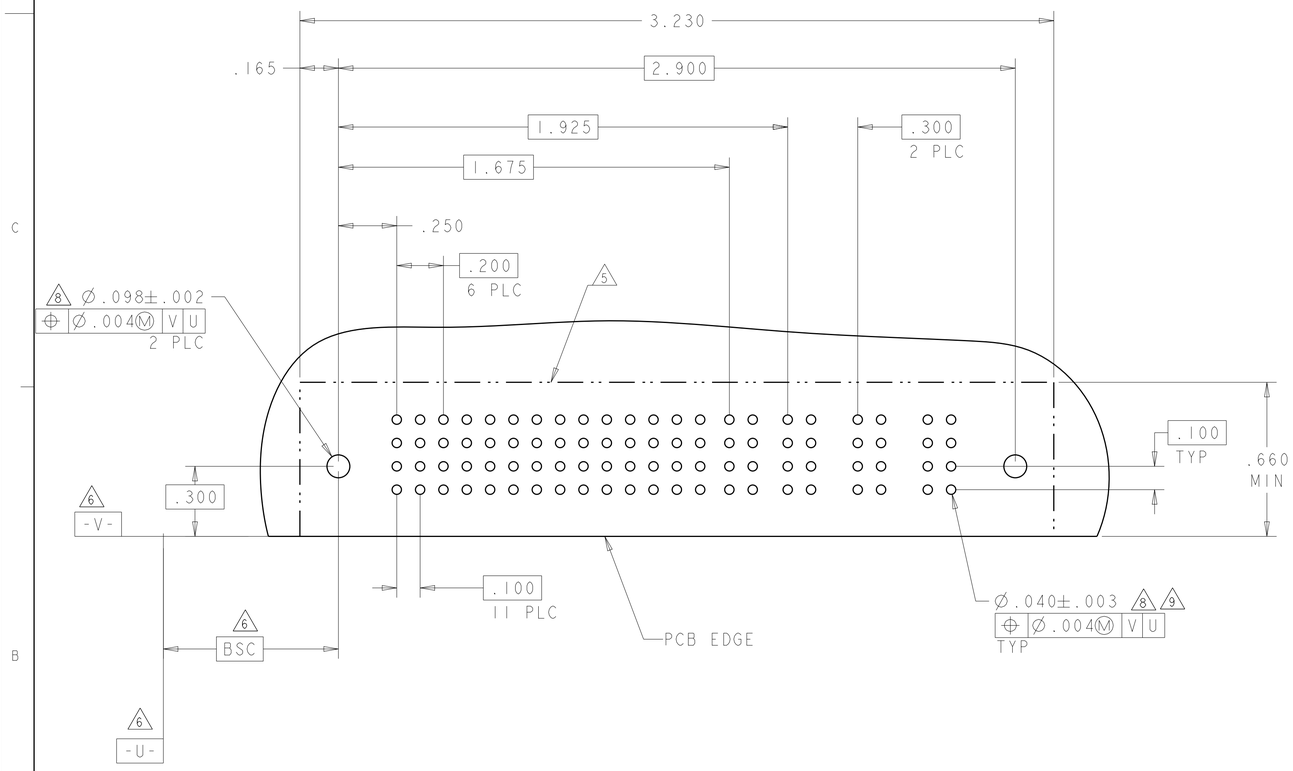

THIS DRAWING IS A CONTROLLED DOCUMENT.

DIMENSIONS: INCHES

TOLERANCES UNLESS OTHERWISE SPECIFIED:
0 PLC ±-
1 PLC ±-
2 PLC ±.01
3 PLC ±.005
4 PLC ±.0020
ANGLES ±2°

MATERIAL - -
FINISH - -

DWN R.GRZYBOWSKI 01MAR05
CHK M.PERCHERKE 01MAR05
APVD M.PERCHERKE -
PRODUCT SPEC 108-1973
APPLICATION SPEC 114-13038
WEIGHT -

TE Connectivity

NAME RIGHT ANGLE HEADER ASSEMBLY DUAL BEAM POWER CONTACT MULTI-BEAM XL

SIZE	CAGE CODE	DRAWING NO	RESTRICTED TO
A1	-	C-6600130	-

CUSTOMER DRAWING | SCALE 4:1 | SHEET 13 OF 13 | REV F5

4805 (3/13)