COMMENT:
ALL RIGHTS ARE RESERVED BY US FOR THIS DRAWING. WITHOUT OUR PRIOR CONSENT,
IT MAY NEITHER BE DUBLICATED NOR MADE AVAILABLE TO A THIRD PARTY,
AND IT ALSO MAY NOT BE IMPROPERLY USED BY TE RECEIVER, OR A THIRD PARTY.

	Surface	Screw (quantity)	Washer (quantity)	Spring washer (quantity)	Nut (quantity)	Package	Notice
F-GSCH1/5-K130	zinc plated 1)	2	4	2	2	in pairs	Packed together in a bag
F-GSCH1/5-K130SN	tin plated	2	4	2	2	in pairs	Packed together in a bag
F-GSCH1/5-K130S	zinc plated 1)	max. 5000	max. 10000	max. 5000	max. 5000	bulk packed	Individually packed in bags
F-GSCH1/5-K130SSN	tin plated	max. 5000	max. 10000	max. 5000	max. 5000	bulk packed	Individually packed in bags
F-GSCH1/5-K130N	zinc plated 1)	2	4	2	2	in pairs	Packed together in a bag without label
F-GSCH1/5-K1114	tin plated	1	-	1	-	per 1pc. in a bag	Threaded insert (F52M122M900) included in delivery

1) with tension control fluid

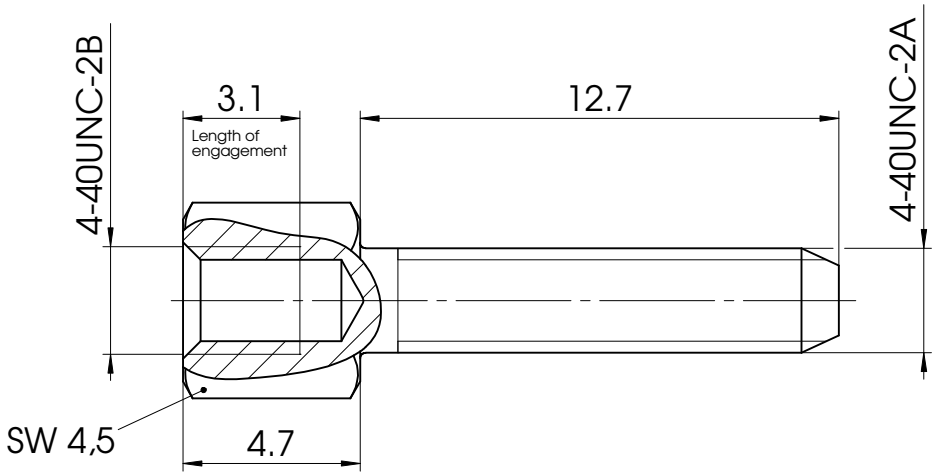

			Measurement without tolerance occ. to ISO 2768-m	SCALE 5:1	TITLE Female screw lock F-GSCH1/5 K130 4-40/4-40
				DATE	NAME
			DRAWN	04-09-2002	schref
			CHECKED	05-09-2002	Floßmann
			FCT group www.fctgroup.com		DWG.NO. F62M036_D
1					REV. 1
REV.	DATE	CH.-NO.	ORIGINAL: DIN A4-DRAWING AS A FILE		REPLACEMENT FOR:
					PAGES 1