THIS DRAWING IS UNPUBLISHED. RELEASED FOR PUBLICATION - , - .
© COPYRIGHT - By - ALL RIGHTS RESERVED.

LOC	DIST
CM	54

REVISIONS

P	LTR	DESCRIPTION	DATE	DWN	APVD
	K	REVISED PER ECO-12-016930	05OCT12	KH	SM

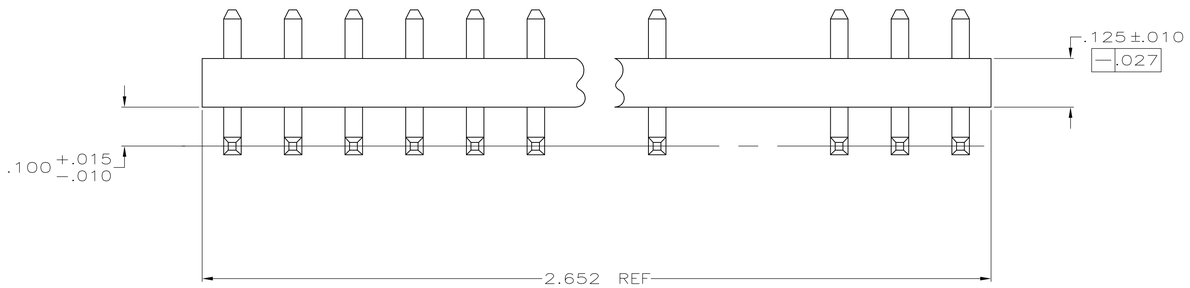

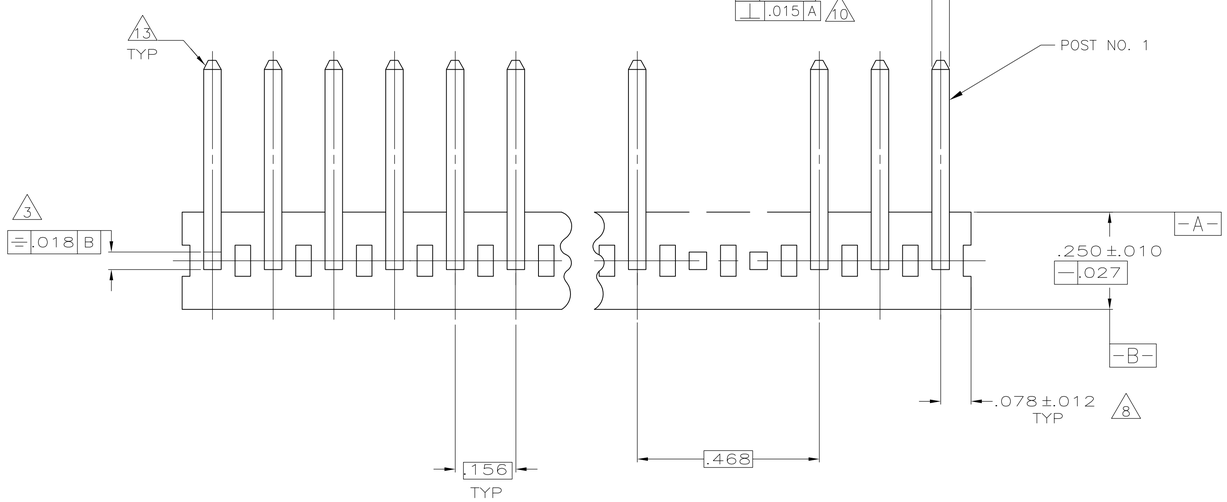

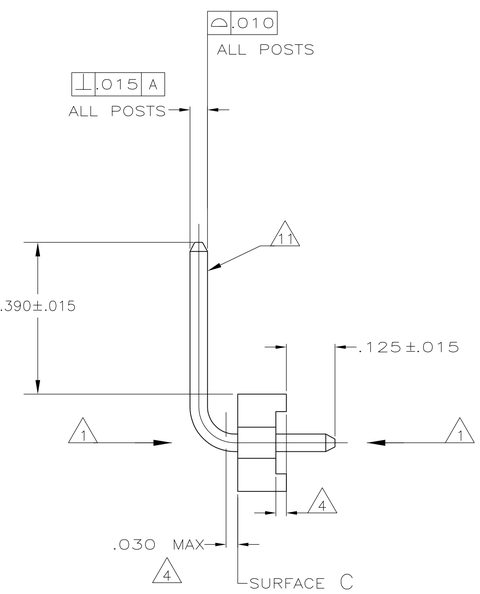

1. POST TO WITHSTAND 13 NEWTONS (3LBS.) MIN. AXIAL FORCE IN BOTH DIRECTIONS SHOWN WITHOUT DISLODGING.
2. TOLERANCES APPLY TO SOLDER SIDE OF BOARD.
3. MEASURED AT SURFACE C.
4. PLASTIC FLASH PERMITTED IN THIS AREA.
5. PARTS COMPLY WITH AMP SOLDERABILITY SPEC. NO. 109-11-2.
6. ONE HOLE MAY BE UNDERSIZED (.065/.060 DIA.) FOR ASSEMBLY RETENTION DURING WAVE SOLDERING.
7. MATERIAL: HEADER-THERMOPLASTIC POLYESTER GLASS-FILLED 94V-0(NATURAL) POST-COPPER ALLOY (TIN PLATED)
8. COORDINATE DIMENSION APPLIES FROM CENTER OF ACTUAL FEATURE.
9. PLASTIC BURRS CAUSED BY CUT-OFF TOOLING ARE PERMITTED WITHIN THE MAXIMUM TOLERANCE ENVELOPE.
10. POST TO BE MEASURED WHEN STRIP IS HELD FLAT.
11. POST MUST WITHSTAND TWO 90° BENDS AGAINST EXTRUSION WITHOUT BREAKING.
12. DIMENSION SHOULD BE .140 -.430 WHEN MATING WITH A MTA-156 CONNECTOR ASSEMBLY,.140 MIN WHEN MATING WITH A SL-156 WIRE-TO-BOARD CONNECTOR ASSEMBLY OR .140-.475 WHEN MATING WITH A SL-156 BOARD-TO-BOARD CONNECTOR ASSEMBLY.
13. PIN BURR OF .005 MAX. VERTICAL AND .003 MAX. HORIZONTAL PERMITTED AT POST TIPS ON BOTH ENDS.

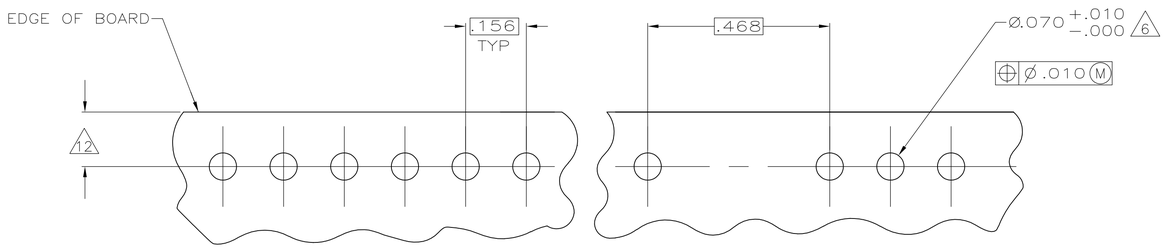

RECOMMENDED MOUNTING HOLE PATTERN FOR .063 THICK P.C. BOARD 2

643888-3 SHOWN

.063	1.60		
.060	1.52	2.652	67.36
.045	1.14	.475	12.07
.030	0.76	.468	11.89
.027	0.69	.430	10.92
.018	0.46	.390	9.91
.015	0.38	.250	6.35
.012	0.30	.156	3.96
.010	0.25	.140	3.56
.008	0.20	.125	3.18
.005	0.13	.100	2.54
.003	0.08	.078	1.98
.001	0.03	.070	1.78
.000	0.00	.065	1.65
IN	MM	IN	MM

CONVERSION TABLE

POST NUMBER OMITTED	PART NUMBER
4 & 5	643888-3

THIS DRAWING IS A CONTROLLED DOCUMENT.

DIMENSIONS: INCHES

TOLERANCES UNLESS OTHERWISE SPECIFIED:
0 PLC ± -
1 PLC ± -
2 PLC ± -
3 PLC ± .005
4 PLC ± -
ANGLES ± 0°30'

MATERIAL 7 FINISH 7

DWN B. LEWIS 15-JAN-1999
CHK R. SWING 15-JAN-1999
APVD C. JONES 15-JAN-1999

PRODUCT SPEC —
APPLICATION SPEC —
WEIGHT —

TE Connectivity

NAME MTA-156 HEADER ASSEMBLY, PLAIN,RIGHT ANGLE,.045 SQUARE POST, TIN PLATED,17 POSITION,OMITTED POST

SIZE	CAGE CODE	DRAWING NO	RESTRICTED TO
A1	00779	C-643888	—

CUSTOMER DRAWING SCALE 5:1 SHEET 1 OF 1 REV K

4805 (3/11)