PART NAME	UTILIBOX (STYLE E)	PART No.	CU-789-MB TO CU-792-MB

MATERIAL:
ABS THERMOPLASTIC
(FLAMMABILITY RATING OF 94V-0 AT 0.070" THICKNESS AND CONTINUOUS USE TEMPERATURE OF 70° C.)

COLOR: BLACK

COVER REDUCES INSIDE HEIGHT BY 0.075.

LENGTH AND WIDTH DIMENSIONS ARE TAKEN FROM CLOSED END OF THE BOX. DIMENSIONS INCREASE SLIGHTLY AT OPEN END DUE TO TAPER.

FOUR (4) #4 x 0.500" LG. SELF THREADING SCREWS WITH HI/LOW THREADS ARE SUPPLIED FOR MOUNTING COVER.

FINISH:
BODY - OUTSIDE SURFACES ARE TEXTURED FINISH WITH TEXTURED INSERT AREA.
COVER - SURFACES ARE SMOOTH.

NOTE: ALL DIMENSIONS HAVE ±0.010 TOLERANCE UNLESS OTHERWISE SPECIFIED.

MOUNTING BOSSES USE EITHER M2.5 METRIC OR #4 STD. SHEET METAL SCREWS x 0.250" LG. (NOT SUPPLIED)

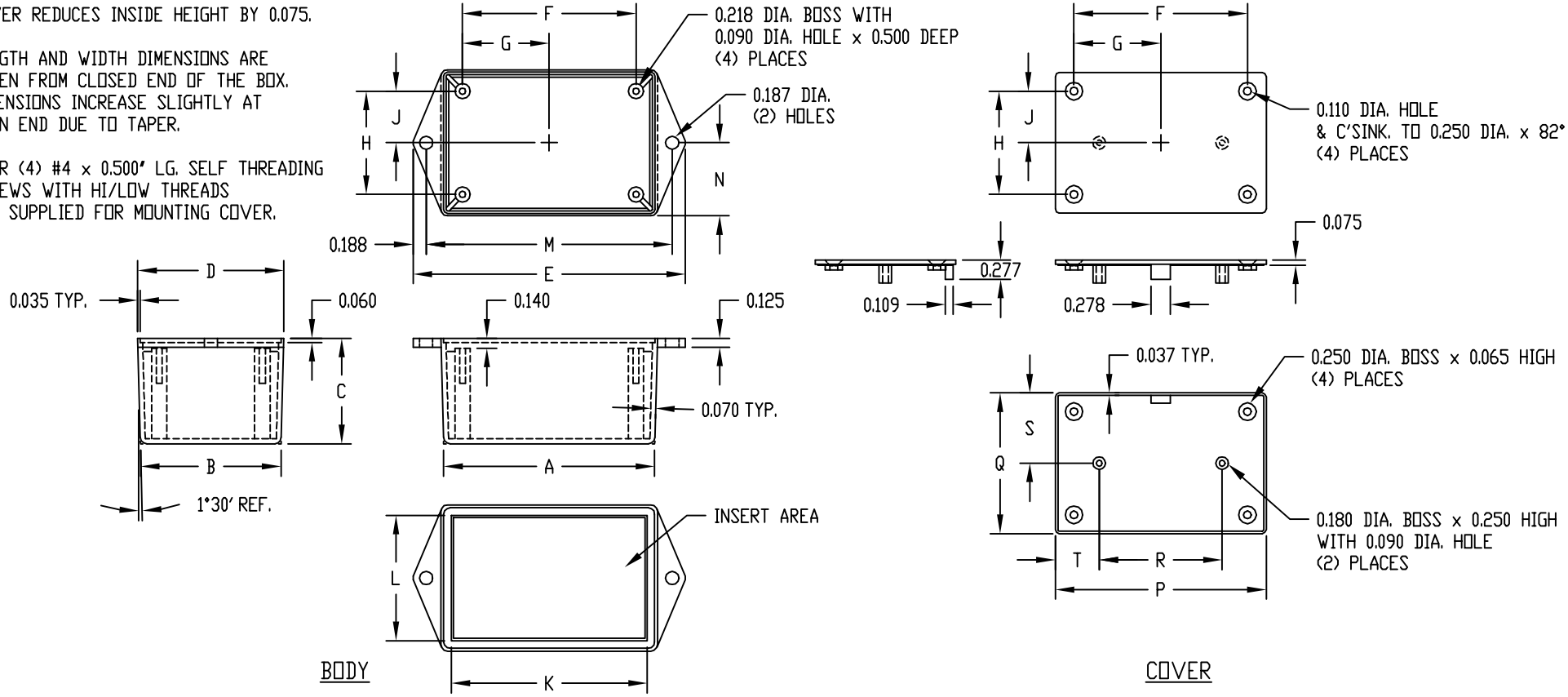

PART No.	A	B	C	D	E	F	G	H	J	K	L	M	N	P	Q	R	S	T
CU-789-MB	3.000	2.000	0.900	2.047	3.875	2.468	1.234	1.468	0.734	2.790	1.781	3.500	1.039	2.968	1.968	1.750	0.984	0.609
CU-790-MB	3.000	2.000	1.500	2.079	3.875	2.468	1.234	1.468	0.734	2.790	1.781	3.500	1.039	3.000	2.000	1.750	1.000	0.625
CU-791-MB	3.000	3.000	1.500	3.079	3.875	2.468	1.234	2.468	1.234	2.790	2.781	3.500	1.539	3.000	3.000	1.750	1.500	0.625
CU-792-MB	4.000	1.750	1.000	1.802	4.875	3.468	1.734	1.218	0.609	3.790	1.531	4.500	0.901	3.978	1.733	3.000	0.866	0.489