THIS DRAWING IS UNPUBLISHED. RELEASED FOR PUBLICATION 20
© COPYRIGHT 20 BY TYCO ELECTRONICS CORPORATION. ALL RIGHTS RESERVED.

PART NUMBER	REV	FIRST USED	POWER UNIT	FEED TYPE	DESCRIPTION
1855248-1	A	122500-1	LEADMAKER	AIR FEED	CUTS CARRIER
1855248-2	A	565435-5	BENCH MODEL K	AIR FEED	CUTS CARRIER
1855248-3	A	354500-1	BENCH MODEL G	AIR FEED	CUTS CARRIER
1855248-6	A	122500-1	LEADMAKER	AIR FEED	CONTINUOUS CARRIER
7-1855248-7	A	-	-	-	SPARE PARTS

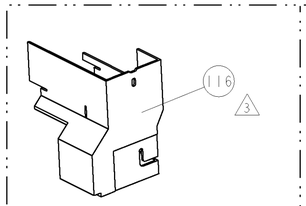

AMP-O-LECTRIC TERM GUARD

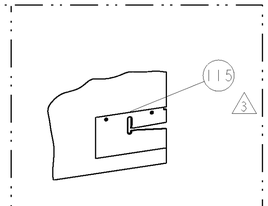

G TERMINATOR GUARD

TERMINAL NAME: MALE METRI-PACK 630 (5)

TE PN	MFR PN	DELPHI TERMINAL - DELPHI CRIMP SPECS			
1949325	12064736				
-	-	CRIMP HEIGHT		WIRE SIZE	REF SETTING
-	-	2.25±0.05mm [.089±.002]		5mm2	B7
-	-	2.15±0.05mm [.085±.002]		4.5mm2 (6)	C5
-	-	-		-	-
-	-	-		-	-
-	-	CRIMP	SIZE	TYPE	RANGE
SEAL PN	-				
1949382	15324993	WIRE	3.65mm [.144]	F	4.5-5.0mm2
-	-	INSUL	7.06mm [.278]	O	Ø4.40-5.15mm
WIRE STRIP LENGTH	TERM APPL SPEC	FEED	APPLICATOR INSTRUCTIONS		SET UP GAGE
5.22-5.98	NONE	20.32	408-8040		458637-1

LOC	DIST
A	66

REVISIONS

P	LTR	DESCRIPTION	DATE	DWN	APVD
	A	RELEASED	020CT2007	MEH	GB

(1) RECOMMENDED SPARE PARTS

(2) GREASE LIGHTLY

(3) GUARD MUST BE IN PLACE WHEN OPERATING APPLICATOR IN A BENCH MACHINE

(4) APPLY TORQ-SEAL IN ALLEN SOCKET TO FILL HOLE AFTER FLAT HD HAS BEEN ADJUSTED TO CORRECT HEIGHT AT QUALIFICATION. APPLY PN 1-23419-5 LOC-TITE TO THREADS.

(5) THIS APPLICATOR APPLIES A TERMINAL WITH A SEAL.

(6) NOT A TERMINAL MANUFACTURER RECOMMENDED APPLICATION.

(7) CUT TO LENGTH AT ASSEMBLY.

* WARNING
ON INSTALLATION, SET WIRE DISC TO LARGEST WIRE SIZE SETTING. USE OF SETTINGS BELOW MIN. REQUIRED CRIMP HEIGHT SETTING WILL CAUSE DAMAGE TO CRIMP TOOLING.

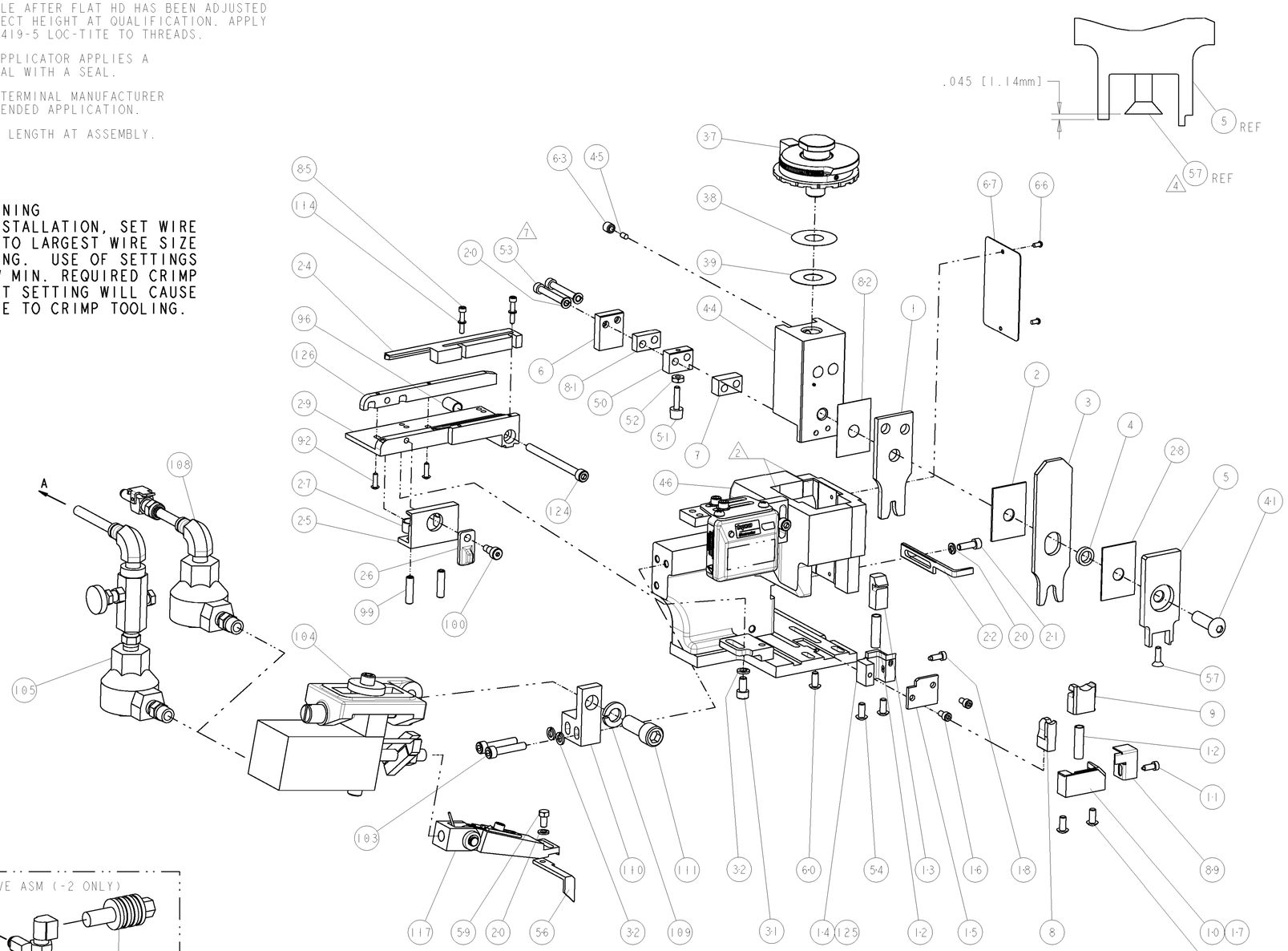

-77	-6	-3	-2	-1	U/M	PART NO	DESCRIPTION	ITEM NO
-	1	1	1	1	-	1-189807-3	FENCE	126
-	1	-	-	-	-	681023-3	SHEAR HOLDER, REAR	125
-	1	1	1	1	-	8-21000-7	SCR, SKT HD CAP 10-32 X 2.500	124
-	-	-	REF	-	-	692655-6	AIR FEED VALVE ASSEMBLY	118
-	1	1	1	1	-	461062-1	FEED FINGER ASSEMBLY	117
-77	-6	-3	-2	-1	U/M	PART NO	DESCRIPTION	ITEM NO

-77	-6	-3	-2	-1	U/M	PART NO	DESCRIPTION	ITEM NO
-	-	-	REF	-	..	455749-1	GUARD WINDOW	116
-	-	REF	-	-	..	679532-1	INSERT, GUARD	115
-	2	2	2	2	-	21024-2	WASHER, SPRG LOCK, REG NO 4	114
-	1	1	1	1	-	3-21001-5	SCR, SKT HD CAP 3/8-16 X 1.000	111
-	1	1	1	1	-	459610-1	MOUNT, FEED BRACKET	110
-	1	1	1	1	-	21024-8	WASHER, SPRG LOCK, REG 3/8	109
-	1	1	-	1	-	692655-7	AIR FEED VALVE ASSEMBLY	108
-	-	-	REF	-	-	24024-2	VALVE, SHUT OFF	106
-	-	-	1	-	-	692655-5	AIR FEED VALVE ASSEMBLY	105
-	1	1	1	1	-	461065-1	ASSEMBLY, AIR FEED	104
-	2	2	2	2	-	3-21000-9	SCR, SKT HD CAP 10-32 X 1.000	103
-	1	1	1	1	-	21989-8	SCR, SKT HD SHLDR 3/16 DIA X .250	100
-	2	2	2	2	-	5-21006-6	SCR, SET, CUP POINT 10-32 X .750	99
-	1	1	1	1	-	1-22281-8	SPRING, COMPRESSION	96
-	2	2	2	2	-	1-21002-4	SCR, BTN SKT HD CAP 4-40 X .375	92
-	1	1	1	1	-	318563-1	GUARD, FRONT CHIP	89
-	2	2	2	2	-	1-21000-6	SCR, SKT HD CAP 4-40 X .625	85
-	1	1	1	1	-	455888-1	SPACER, CRIMPER	82
-	1	1	1	1	-	1-240641-4	SPACER	81
-	1	1	1	1	-	4088040	SF APPL INST 408-8040	72
-	1	1	1	1	-	217238-1	GENERAL INSTRUCTION PKG	71
-	1	1	1	1	-	461264-5	PLATE, IDENTIFICATION	67
-	2	2	2	2	-	21017-2	SCREW, DRIVE	66
-	1	1	1	1	-	21009-2	SCR, SET, SELF LOCKING 1/4-20 X .250	63
-	1	1	1	1	-	22733-8	SCR, BHSC, SELF-LOCKING, 8-32 X .375	60
-	1	1	1	1	-	2-22603-0	SCR, HEX HD CAP 8-32 X .312	59
-	1	1	1	1	-	2-21003-0	SCR, FLT SKT HD CAP 6-32 X .500	57
-	1	1	1	1	-	3-694433-1	FEED PAWL	56
-	4	4	4	4	-	2-21002-1	SCR, BTN SKT HD CAP 8-32 X .375	54
-	2	2	2	2	-	3-21000-2	SCR, SKT HD CAP 8-32 X 1.250	53
-	1	1	1	1	-	21018-5	NUT, HEX, REG 6-32	52
-	1	1	1	1	-	811242-2	BUMPER, HOLD DOWN	51
-	1	1	1	1	-	690753-1	SPACER, TONKER	50
-	1	1	1	1	-	1633399-4	APPL., BASIC AIR FEED SUB ASSY	46
-	1	1	1	1	-	690191-1	PLUG,NYLON	45
-	1	1	1	1	-	1-455673-4	RAM, SIDE FEED	44
-	1	1	1	1	-	7-21002-9	SCR, BTN SKT HD CAP 5/16-24 X 1.00	41
-	1	1	1	1	-	690125-1	SHIM SUB-ASSY	39
-	1	1	1	1	-	469367-3	SHIM	38
-	1	1	1	1	-	879103-2	FINE ADJUST HEAD ASSEMBLY	37
-	3	3	3	3	-	21024-5	WASHER, SPRG LOCK, REG NO 10	32
-	1	1	1	1	-	3-21000-4	SCR, SKT HD CAP 10-32 X .375	31
-	1	1	1	1	-	1-1633087-0	PLATE, STRIP GUIDE	29
-	1	1	1	1	-	455888-7	SPACER, CRIMPER	28
-	2	2	2	2	-	1-22284-0	SPRING, COMPRESSION	27
-	1	1	1	1	-	356835-1	LEVER, DRAG RELEASE	26
-	1	1	1	1	-	240792-1	DRAG, TERMINAL	25
-	1	1	1	1	-	1-679651-2	FRONT STRIP GUIDE	24
-	1	1	1	1	-	690472-2	STRIPPER	22
-	1	1	1	1	-	2-21000-7	SCR, SKT HD CAP 8-32 X .500	21
-	4	4	4	4	-	21024-4	WASHER, SPRG LOCK, REG NO 8	20
-	1	1	1	1	-	690461-1	STOP, SHEAR	18
-	1	-	-	-	-	679625-4	SHEAR HOLDER, FRONT (NO CUT)	17
-	2	2	2	2	-	1-21000-8	SCR, SKT HD CAP 6-32 X .250	16
-	1	1	1	1	-	2-690464-1	SHEAR PLATE, REAR	15
-	-	1	1	1	-	1-690462-5	SHEAR HOLDER, REAR	14
-	1	1	1	1	-	690463-1	FLOATING SHEAR, REAR	13
-	2	2	2	2	-	3-22280-3	SPRING, COMPRESSION	12
-	1	1	1	1	-	1-690461-7	STOP, SHEAR	11
-	-	1	1	1	-	2-690459-2	SHEAR HOLDER, FRONT	10
-	1	1	1	1	-	318059-4	FLOATING SHEAR, FRONT	9
1	1	1	1	1	-	1-1633332-3	ANVIL, COMBINATION	8
-	1	1	1	1	-	7-240641-2	SPACER	7
-	1	1	1	1	-	1-690468-5	DEPRESSOR SHEAR, REAR	6
-	1	1	1	1	-	122399-4	DEPRESSOR, SHEAR	5
-	1	1	1	1	-	238011-2	BLOCK, CRIMPER SPACER	4
1	1	1	1	1	-	9-1583690-5	CRIMPER, INSUL O	3
-	1	1	1	1	-	1-455888-0	SPACER, CRIMPER	2
1	1	1	1	1	-	2-1673600-2	CRIMPER, WIRE	1
-77	-6	-3	-2	-1	U/M	PART NO	DESCRIPTION	ITEM NO

THIS DRAWING IS A CONTROLLED DOCUMENT FOR TYCO ELECTRONICS CORPORATION. IT IS SUBJECT TO CHANGE AND THE CONTROLLING ENGINEERING ORGANIZATION SHOULD BE CONTACTED FOR THE LATEST REVISION.

DIMENSIONS: INCHES

TOLERANCES UNLESS OTHERWISE SPECIFIED:
0 PLC ±-
1 PLC ±0.1
2 PLC ±0.01
3 PLC ±0.001
4 PLC ±0.0001
ANGLES ±-

MATERIAL - -
FINISH - -

DWN R.O.WILSON 09MAY2007
CHK G. BAILEY 10MAY2007
APVD T.ELBIN 10MAY2007
PRODUCT SPEC -
APPLICATION SPEC -
WEIGHT -

Tyco Electronics
Tyco Electronics
Harrisburg, PA 17105-3608

NAME FINE ADJUST SIDE FEED HDM APPLICATOR -

SIZE A1 | CAGE CODE 00779 | DRAWING NO C-1855248 | RESTRICTED TO -

CUSTOMER DRAWING | SCALE 3:5 | SHEET 1 OF 1 | REV A

CUSTOMER VIEWABLE ASSEMBLY

AMP 4805 REV 31MAR2000

Pro/ENGINEER DRAWING