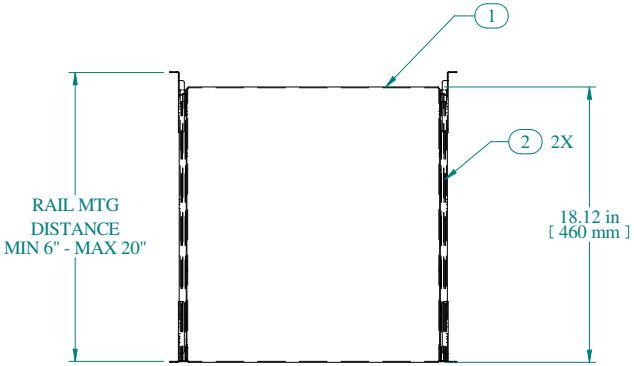

TOP VIEW

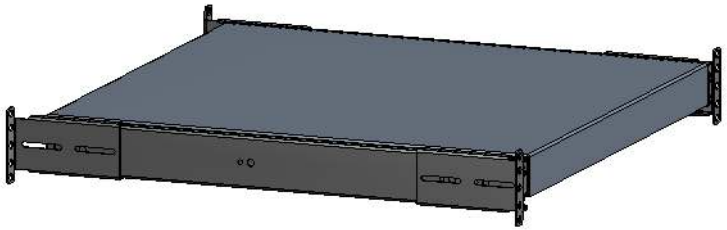

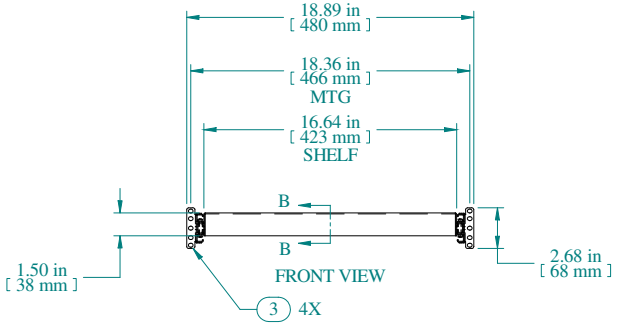

FRONT VIEW

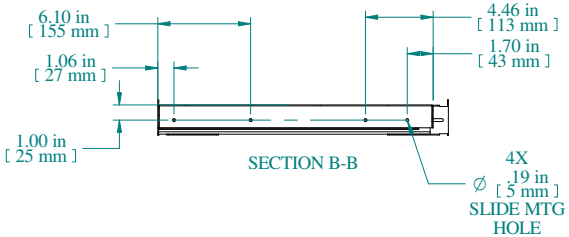

SECTION B-B

Item Number	Title	Quantity
1	RS - SOLID SHELF	1
2	SLIDE - 18" FULL TRAVEL	2
3	SLIDE MTG BRACKET	4

PART NUMBERS	
RSUS1918BK1	PAINTED BLACK TEXTURED
RSUS1918CG1	PAINTED GREY/BEIGE TEXTURED

NOTES
Maximum Weight 120 lb
Some Assembly Required
Slide Assembly Hardware Omitted for Clarity

Data subject to change without notice. Isometric drawing not to scale.

HAMMOND MANUFACTURING™

www.hammondmfg.com

PART NO. RSUS1918