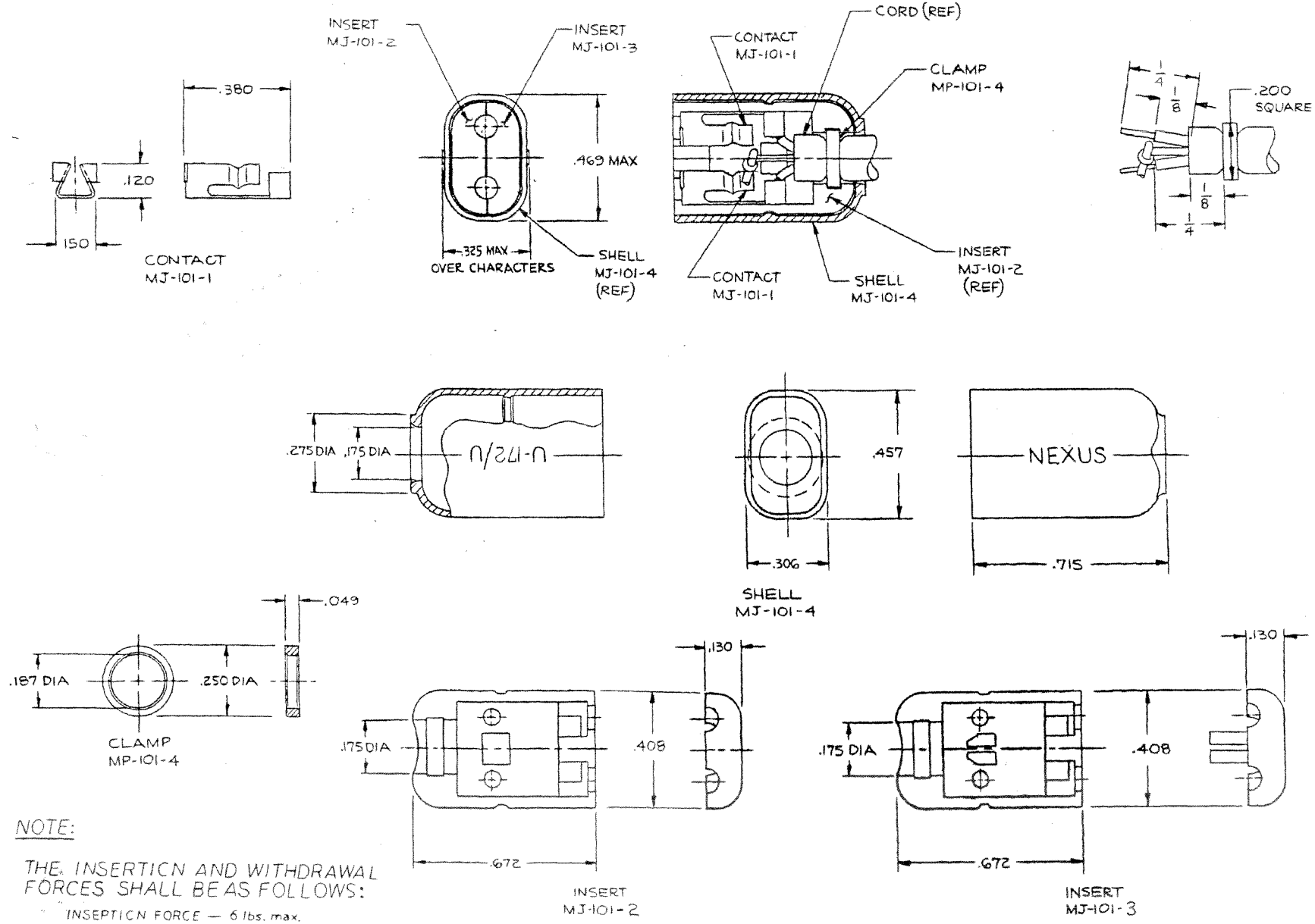

A. NOTE:

THE INSERTION AND WITHDRAWAL FORCES SHALL BE AS FOLLOWS:

INSERTION FORCE — 6 lbs. max.
WITHDRAWAL FORCE — 3 lbs. min., 6 lbs. max.

TEST PLUG TP291, CONFORMING TO MIL-J-641, SHALL BE USED.

CN #	LET.	REVISION	DATE	CHG.
109	B	SEE ECN#109	7/5/11	HR
0085	A	ADDED NOTES	6/4/92	

DWN. BY IDH	DATE 3-13-87	MATERIAL	
CHECKED BY RVC	3-13-87	FINISH	
APPR. BY		WEIGHT	SCALE 4:1
		TITLE MICROPHONE JACK	
		DO NOT SCALE DWG.	SHEET OF

NEXUS
STAMFORD, CONN.

SIZE C DWG. NO. MJ-101

C MJ-101