SHEET OF

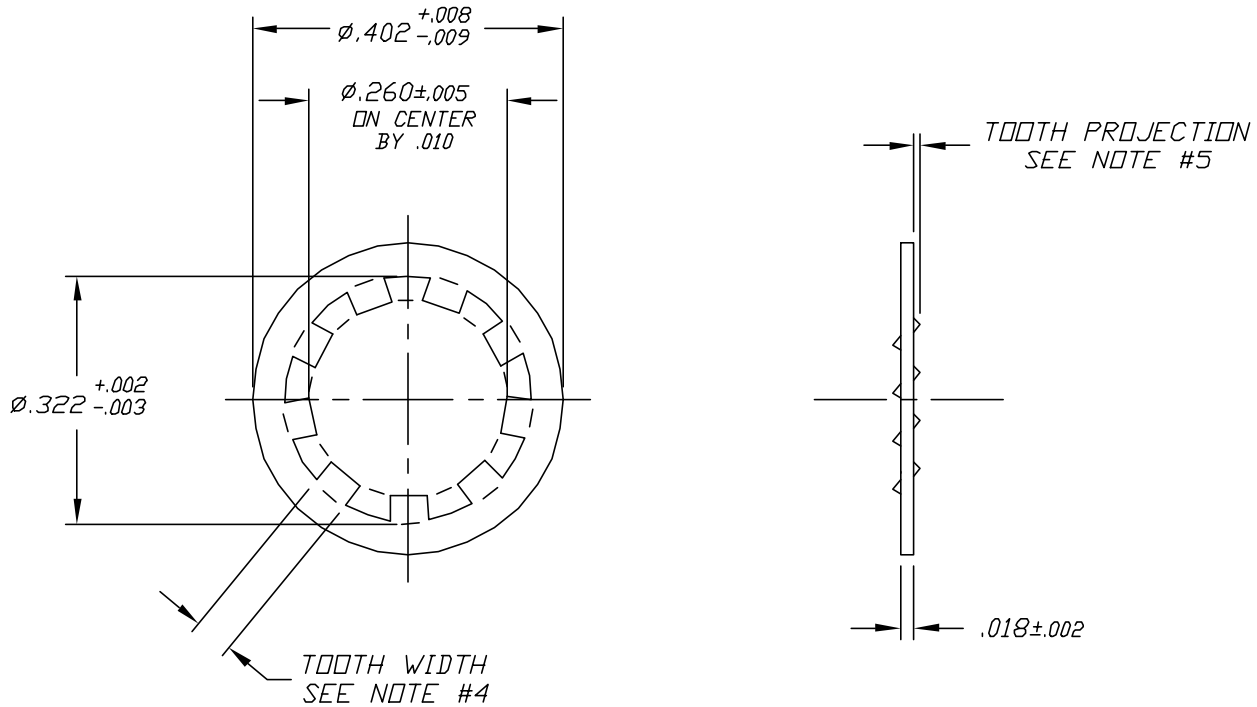

NOTES:

1. ALL DIMENSIONS IN INCHES
2. MAT'L: CRS TYPE SAE 1050
   HEAT TREAT TO RC 44-48
3. PLATING SPEC.: SULFAMATE NICKEL, DUCTILE
   NICKEL PLATE .00015/.00025
   COPPER STRIKE .00020/.00050
4. NO. OF TEETH: 9 EQUALLY SPACED
5. MININUM PROJECTION OF ANY SINGLE
   TOOTH SHALL BE .00015

REV.	DESCRIPTION	DATE	CHKD
D	REVISED & REDRAWN	9/28/98	

THE INFORMATION CONTAINED IN THIS DOCUMENT IS PROPRIETARY TO E-SWITCH AND IS NOT TO BE COPIED OR TRANSFERRED

TOLERANCES: ±0.4 ±0.25 / 0.0 0.00

E-SWITCH®

TITLE: LOCK WASHER HDW11 -1/4-40UNS

SCALE	DATE	DR	DWG	REV
4:1	8/25/95	MM	T100011	D