MATERIAL NO. LOOSE PIECE	ENG. NO.	MATERIAL NO. TAPE MOUNTED	ENG. NO.	STUD SIZE	"S" C2 ±.005/0.13	"W" MAX.	"C" MIN.	"L" MAX.	"ID" MIN.	STOCK THICKNESS	"H" ±.020/0.51
190690027	AA-120-02	190690028	AA-120-02T	2	.094/(2.39)	.235/(6.00)	.157/(3.99)	.484/(12.29)	.062/(1.57)	.028/(0.71)	1.155/(29.34)
190690029	AA-120-04	190690030	AA-120-04T	4	.119/(3.02)						
190690031	AA-120-06	190690032	AA-120-06T	6	.146/(3.71)						
190690033	AA-121-06	190690034	AA-121-06T	6	.146/(3.71)	.322/(8.18)	.270/(6.86)	.641/(16.28)	.062/(1.57)	.028/(0.71)	
190690035	AA-121-08	190690036	AA-121-08T	8	.173/(4.39)						
190690037	AA-121-10	190690038	AA-121-10T	10	.198/(5.03)						
190690039	AA-121-209	190690475	AA-121-209T	209	.209/(5.18)						
190690040	AA-122-10	190690041	AA-122-10T	10	.198/(5.03)	.477/(12.11)	.386/(9.80)	.835/(21.21)	.062/(1.57)	.028/(0.71)	
190690042	AA-122-14	190690044	AA-122-14T	14	.265/(6.71)						
190690045	AA-122-56	190690046	AA-122-56T	56	.328/(8.33)						
190690047	AA-126-10	-------	-------	10	.198/(5.03)	.544/(13.82)	.552/(14.02)	1.034/(26.26)	.055/(1.40)	.031/(0.79)	1.342/(34.09)
190690048	AA-126-14	190690128	AA-126-14T	14	.265/(6.71)						
190690051	AA-126-56	-------	-------	56	.328/(8.33)						
190690049	AA-126-38	190690050	AA-126-38T	38	.390/(9.91)						
190690052	AA-132-04	190690053	AA-132-04T	4	.119/(3.02)	.264/(6.70)	.240/(6.10)	.582/(14.78)	.062/(1.57)	.028/(0.71)	1.155/(29.34)
190690054	AA-132-06	190690055	AA-132-06T	6	.146/(3.71)						
190690056	AA-132-08	190690057	AA-132-08T	8	.173/(4.39)						
190690061	AA-133-10	190690062	AA-133-10T	10	.198/(5.03)	.283/(7.20)	.240/(6.10)	.591/(15.00)	.062/(1.57)	.028/(0.71)	
190690024	AA-1111-02	190690191	AA-1111-02T	2	.094/(2.39)	.197/(5.00)	.173/(4.40)	.490/(12.40)	.055/(1.40)	.031/(0.79)	
190690025	AA-1111-04	190690026	AA-1111-04T	4	.119/(3.02)						

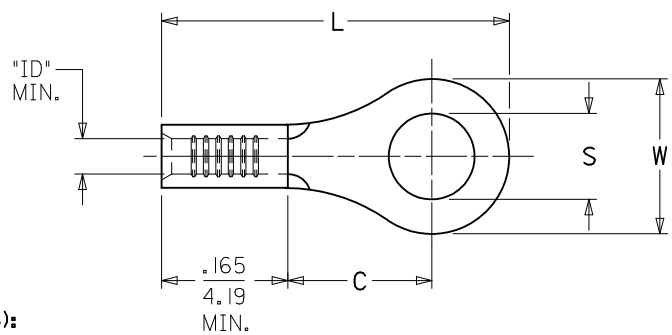

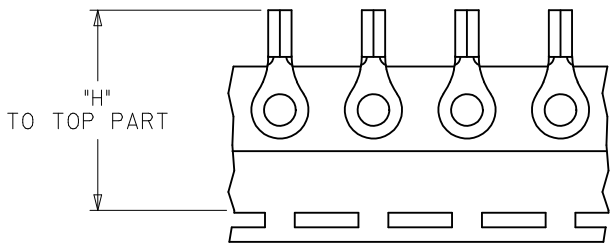

SALES DRAWING

NOTE(S):

1. MATERIAL: COPPER.
2. PLATING: ELECTRO-TIN.
3. ALL DIMENSIONS IN INCHES/(MM).

   WIRE SIZE:
   22-18 AWG
   0.25-1.5 MM^2
4. PARTS ARE ROHS COMPLIANT.

STDIZE STUD TOL
EC NO: WNA2011-0225
DRWN:ETHRODAHL 2010/10/29
CH'KD:JMACNEIL 2010/11/17
APPR:JMACNEIL 2010/11/17
DESCRIPTION
C2
REV

QUALITY SYMBOLS
▼=0
(C)=0

GENERAL TOLERANCES (UNLESS SPECIFIED)

	mm	INCH
4 PLACES	± ---	± ---
3 PLACES	± ---	± ---
2 PLACES	± ---	± ---
1 PLACE	± ---	± ---
ANGULAR ±---°		

DRAFT WHERE APPLICABLE MUST REMAIN WITHIN DIMENSIONS

DIMENSION STYLE: IN/MM
SCALE: ---
DESIGN UNITS: INCH
THIRD ANGLE PROJECTION

DRAWN BY: BDEROSS DATE: 2000/6/13
CHECKED BY: JHACKNEY DATE: 2000/6/13
APPROVED BY: JMACNEIL DATE: 2010/11/17

TITLE: RING TONGUE TERMINAL KRIMPTITE, 100 SERIES 22-18 AWG

MOLEX INCORPORATED

MATERIAL NO.: SEE CHART
DOCUMENT NO.: SD-19069-004
SHEET NO.: 1 OF 1
SIZE: B

THIS DRAWING CONTAINS INFORMATION THAT IS PROPRIETARY TO MOLEX INCORPORATED AND SHOULD NOT BE USED WITHOUT WRITTEN PERMISSION