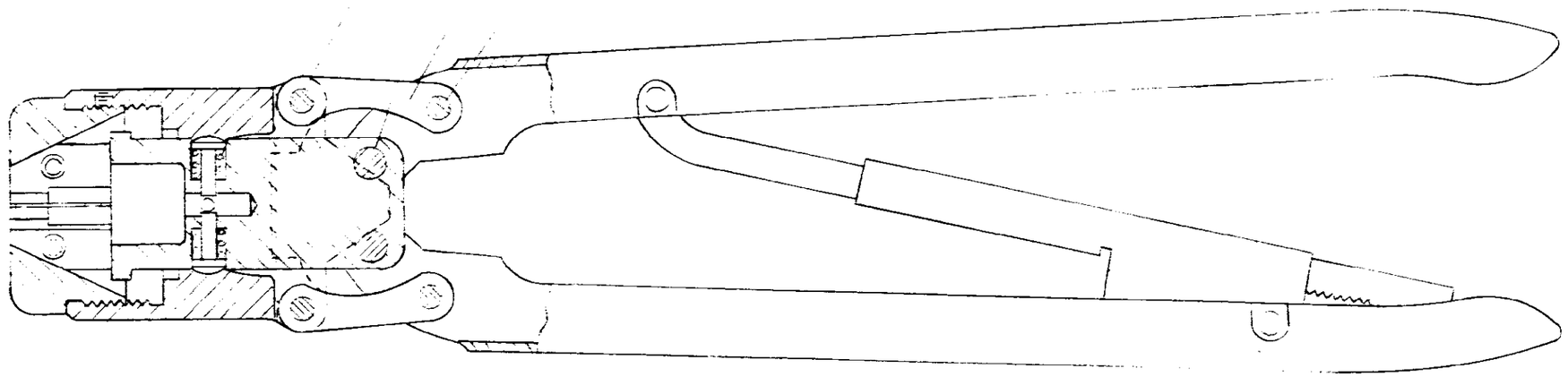

BRAID CRIMP .257 / .233 — — .207 / .221 INSULATION CRIMP

— FERRULE #2-330316-2

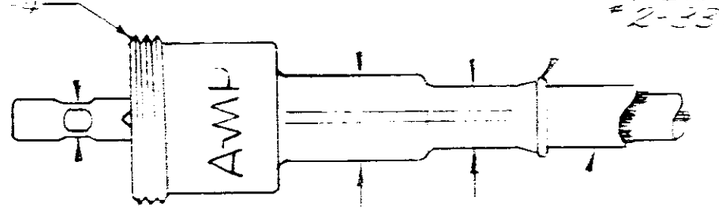

— .102 / .113 CENTER CONDUCTOR

— CABLE NO. RG-58A/U

METHOD OF GAGING CRIMP DIMS.

THE CRIMP DIMS. APPLY ONLY TO THE ABOVE CONNECTIONS ON A CRIMPED PRODUCT

DWG SIZE	NUMBER	NAME	REMARKS	ITEM NO
2 A	330888	PIN-RETAINING		6
2 —	21042-2	RING-RETAINING		5
2 A	330314	[illegible]		4
4 —	21042-3	RING-RETAINING		3
2 A	330817	PIN-RETAINING		2
2 A	330487	PIN-RETAINING		1

REQUIRED PER ASSEMBLY

DESCRIPTION

LTR	REVISION RECORD	DR	CHK	DATE
L	REVISED	B.S.	RJ	10-7-65
C	REVISED	J.J.R.		[illegible]
B	REVISED	[illegible]	[illegible]	[illegible]
A	REVISED	CM		[illegible]

NUMBER 69[illegible]

© 1964 BY AMP INCORPORATED. ALL RIGHTS RESERVED.
AMP PRODUCTS COVERED BY PATENTS AND OR PATENTS PENDING.

CUSTOMER COPY REFERENCE ONLY

DR [illegible] 5-28-6

CHK [illegible]

DE

APP [illegible]

MATERIAL AND FINISH —

WIRE — RANGE — INSULATION RG-58A/U —

TOLERANCE EXCEPT AS NOTED ± .015 ± 1° 0

SCALE 1:1

AMP INCORPORATED HARRISBURG, PENNA

CLASS —

TYPE BULLSEYE [illegible]

LOC 1 B NO 69[illegible] REV D

NAME HAND TOOL ASSEMBLY

THIS INFORMATION IS CONFIDENTIAL AND IS SUBMITTED TO YOU ON CONDITION THAT NO FURTHER DISCLOSURE IS MADE BY YOU TO OTHER THAN AMP PERSONNEL WITHOUT WRITTEN AUTHORIZATION FROM AMP INCORPORATED, HARRISBURG, PA.

DIMENSIONS IN INCHES. DO NOT SCALE PRINT

PRINT 1

AMP 1253 REV 7/60