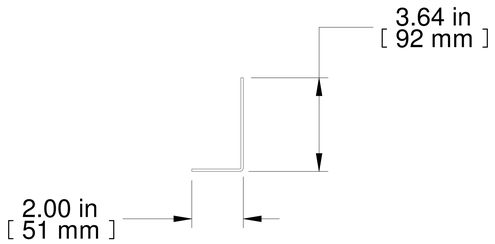


TOP VIEW

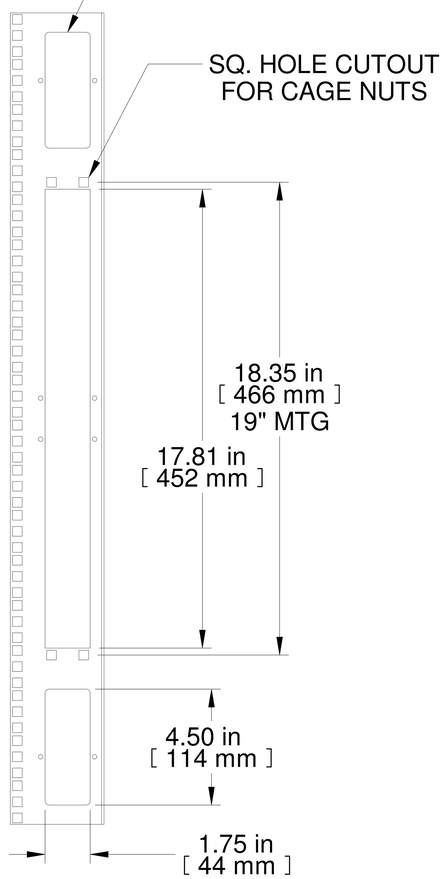


L.S. VIEW

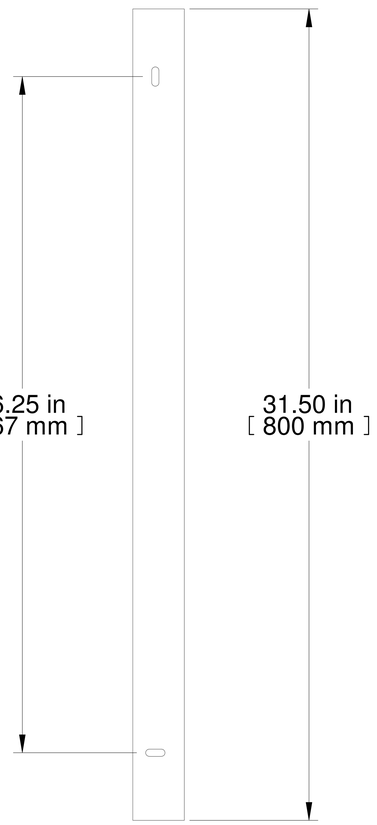


FRONT VIEW

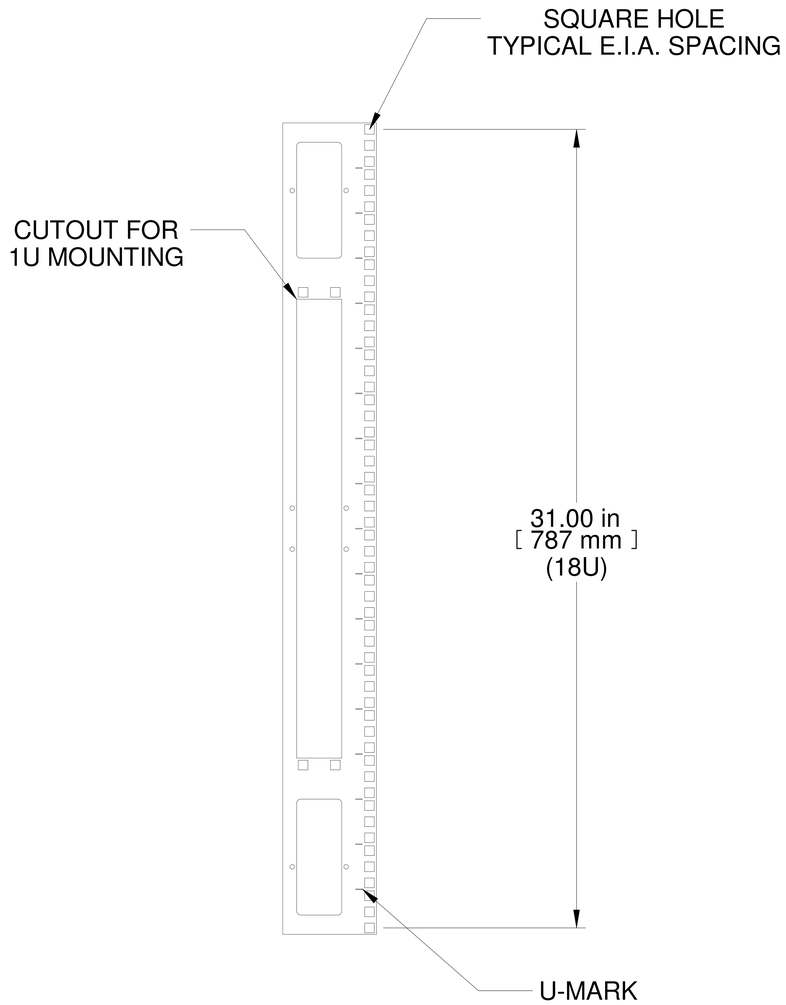


R.S. VIEW

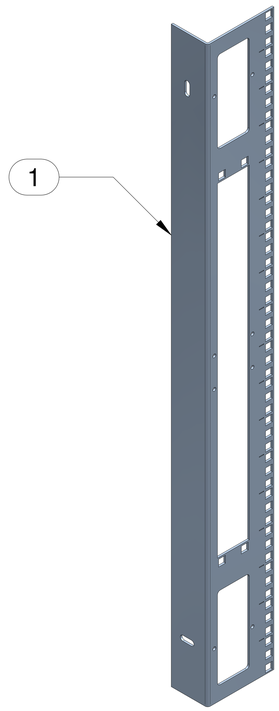


ISOMETRIC
(SOLD AS PAIR)

BOTTOM VIEW

| Item Number | Title | Quantity |
|---|---|---|
| 1 | HWC RAIL - SQ. HOLE | 2 |

**PART NUMBERS**

| | |
|---|---|
| HWC3018USR | PAINTED BLACK THIN FILM |

**NOTES**

Sold in Pairs
Equipment Mounting Hardware Not Included
See Hammond Website for More Accessories

**Français**

Pour tous les détails sur nos produits,
svp veuillez consulter notre site www.hammondmfg.com

Data subject to change without notice. Isometric drawing not to scale.
Les données sont sujettes à changement sans préavis.

HAMMOND MANUFACTURING®

www.hammondmfg.com

PART NO. **HWC3018USR**