THIS DRAWING IS UNPUBLISHED. RELEASED FOR PUBLICATION - ,- .
© COPYRIGHT - BY TYCO ELECTRONICS CORPORATION. ALL INTERNATIONAL RIGHTS RESERVED.

PART NUMBER	REV	FIRST USED
7 1157050-1	H	-

CRIMP DATA AMP TERMINAL AMP CRIMP SPECS

TERMINAL NAME: CRIMP CONTACT

CRIMP	SIZE	TYPE	RANGE
WIRE	1.78 [.070 IN]	F	200-1855 CMA
INSUL	-	-	-

WIRE STRIP LENGT 8 5.00-5.50 [.197-.217 IN]

APPL INSTRUCTION 408-8322

TERMINAL - APPL SPEC C-160631 6

FEED 11 8.38 [.330 IN]

TERMINALS APPLIED

160631-6	-	-	-	-
-	-	-	-	-
-	-	-	-	-
-	-	-	-	-
-	-	-	-	-
-	-	-	-	-
-	-	-	-	-
-	-	-	-	-

WIRE SIZE mm² AWG	CRIMP HEIGHT 6	PIN PN AND LENGTH [IN]
1200-1855 CMA	1.30 ±0.05 [.051 ±.002 IN]	4-354779-6 [.3220]
800-1200 CMA	1.22 ±0.05 [.048 ±.002 IN]	5-354779-2 [.3250]
255-800 CMA	1.17 ±0.02 [.046 ±.001 IN]	5-354779-6 [.3270]
-	-	-
-	-	-
-	-	-
-	-	-
-	-	-
-	-	-
-	-	-
-	-	-
-	-	-
-	-	-
-	-	-

SET UP GAGE	LAYOUT
458637-3	L1157050

1. RECOMMENDED SPARE PARTS.
2. GREASE RAM, CAM, CAM FOLLOWER AND FEED ROD LIGHTLY.
3. LUBRICATE DAILY PER THE APPLICATOR INSTRUCTION SHEET SUPPLIED WITH THE APPLICATOR.
4. CUT TO LENGTH AT ASSY.
5. ASSEMBLY NOTE: APPLICATOR HOUSING PART N° 1320991-1 (SUPPLIED AS PART OF BASIC APPLICATOR, ITEM 46) TO BE RE-WORKED AS PER PRODUCTION DRAWING 525917-1.
6. CRIMP HEIGHT TO BE MEASURED AT POINT SHOWN IN C-160631.
7. GUARD KIT PART N° 525916-1 (NOT SHOWN) TO BE USED ONLY WITH ELT TERMINATOR PART N° 1338600-6 (NOT SHOWN).
8. FOR DOUBLE WIRE-ON-WIRE COMBINATION (0.50+0.50mm ONLY) UPPER WIRE TO BE TERMINATED AS DETAILED BELOW;

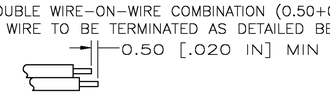

9. THESE ITEMS ARE NOT SHOWN FOR CLARITY.
10. STORE APPLICATOR WITH A SMALL STRIP OF TERMINALS IN CRIMP ZONE.
11. CORRECT FEED ADJUSTMENT IS CRITICAL TO ENSURE OPTIMUM CRIMP AND CUT-OFF TAB / BURR.
12. BASE PLATE P/N 525895-1 (ITEM 81) TO BE EXCHANGED WITH BASE PLATE P/N 1320992-1, AS SUPPLIED ON BASIC APPL. 1320999-3 (ITEM 46). BASE PLATE TO BE DOWELLED TO APPLICATOR HOUSING UPON SET-UP USING DOWEL PINS P/N 992946-3 (ITEM 82).

VIEW B ROTATED 180°

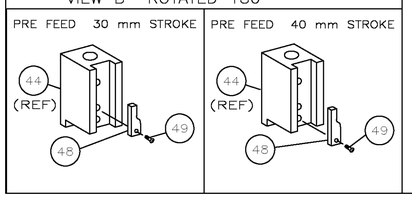

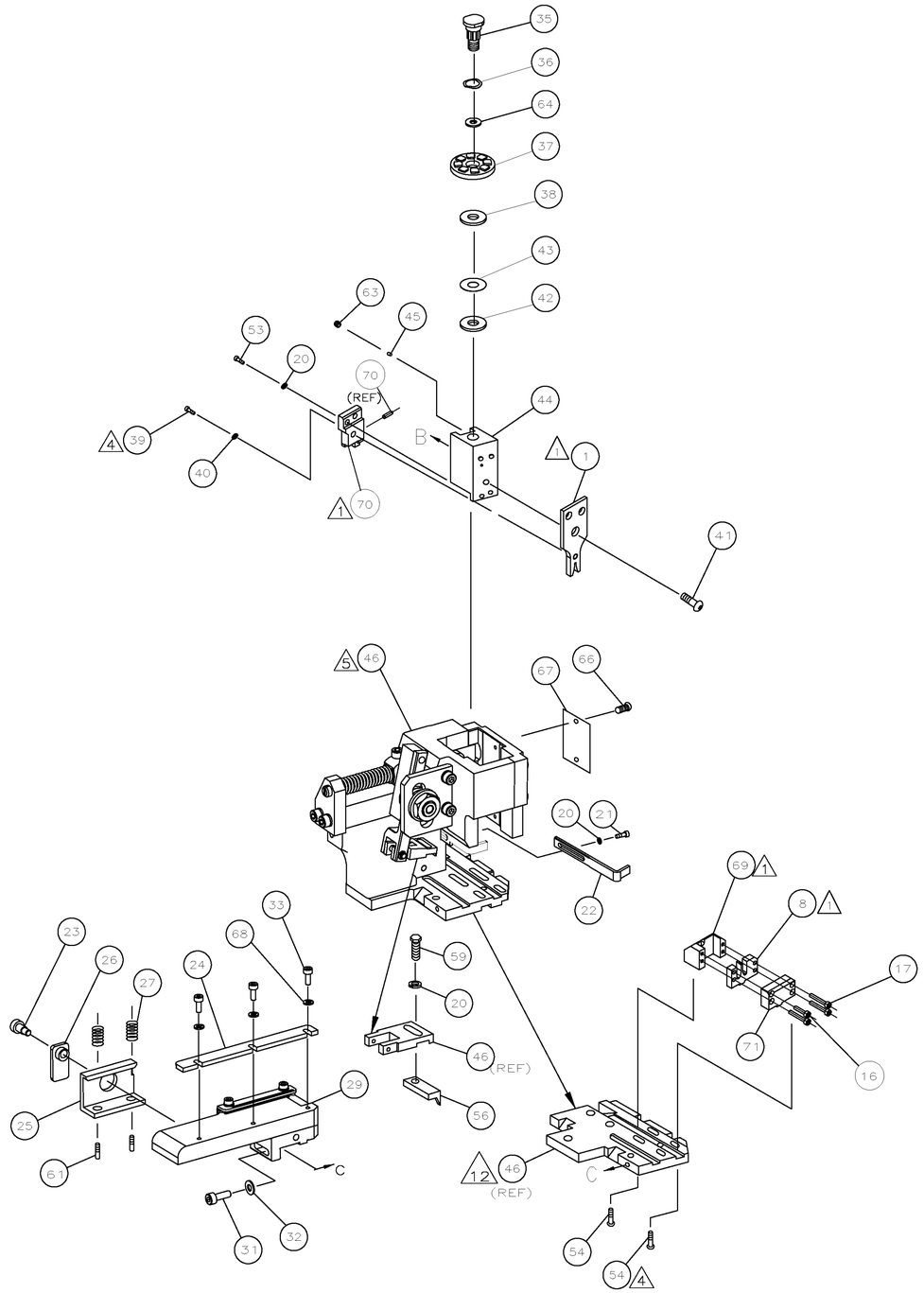

LOC	DIST
A	66

REVISIONS

P	LTR	DESCRIPTION	DATE	DWN	APVD
	H	ECR-09-027461	17DEC2009	L.Z	S.X

12	2	992946-3	DOWEL PIN	82
	1	525895-1	BASE PLATE	81
9	1	1-18027-0	WASHER, FLAT	80
	1	6-18023-7	SCR,CAP SKT HD (M2.5X6.0)	79
	2	18023-3	SCR,CAP SKT HD (M3X8)	78
				77
				76
				75
9	1	525915-4	GUARD, FRONT TOOLING	74
	1	525915-3	GUARD, BACK TOOLING	73
	1	1157050	PRINT, APPLICATOR LOG SHEET	72
	1	525901-1	BLOCK, SUPPORT	71
1	1	525913-1	BLADE, SHEAR, ASSEMBLY	70
	1	525892-1	PLATE, SHEAR	69
	3	18025-1	WASHER, LOCK (M3)	68
	1	461264-1	PLATE, IDENTIFICATION	67
	2	21017-2	SCR,DRIVE(#2x.19)ID PLATE	66
	1	986950-1	WASHER, FLAT PRECISION	64
	1	3-18031-0	SCR,SKT SET(M6X6)RAM	63
	2	2-18032-5	SCR,SET(M5X20)DRAG	61
	1	5-18022-2	SCR,HEX(M4X8)FEED FINGER	59
	1	1338683-2	PAWL, FEED	56
	4	18024-8	SCR,BHC(M4x12)SHEAR HOLDER	54
	2	1-18023-1	SCR,SHC(M4x10)	53
	1	18024-3	SCR,BHC(M3X10)CAM	49
	1	1338675-1	CAM, PRE FEED 30 & 40 mm ST	48
				47
12 5	1	1320999-3	APPLICATOR BASIC SUBASSY	46
	1	690191-1	PLUG, NYLON	45
	1	525894-1	RAM	44
	1	690125-1	WASHER, LAMINATED	43
	1	690124-1	WASHER, RAM	42
	1	2-18024-6	SCR,BHC(M8X25)RAM	41
	1	18027-3	WASHER,SUPPORT BLOCK	40
4	1	1-18024-3	SCR,BHC(M5x16)SUPPORT BLOCK	39
	1	690223-2	DISC SPACER, INSULATION	38
	1	354777-1	WIRE DISC, PLASTIC	37
	1	22480-5	WASHER, SPRING	36
	1	690212-1	POST, RAM	35
				34
	3	18023-5	SCREW,SHC(M3X12)FRT STRP GDE	33
	1	18027-2	WASHER, FLAT(M4)	32
	1	1-18023-2	SCR,SKT CAP(M4X12)MOUNT BLOCK	31
				30
	1	525911-1	STRIP GUIDE PLATE ASSY	29
				28
	2	1-22284-0	SPRING, DRAG	27
	1	356835-1	LEVER, DRAG RELEASE	26
	1	240792-5	DRAG, TERMINAL	25
	1	525896-1	GUIDE, STRIP (FRONT)	24
	1	980371-4	SCR,SHC SHLD	23
	1	525900-1	STRIPPER	22
	1	1-18023-1	SCR,SHC(M4X10)STRIPPER	21
	4	18025-2	WASHER,LOCK(M4)STRIPPER	20
				19
				18
	3	18023-7	SCR,SHC(M3X20)SHEAR PL	17
	1	18023-6	SCR,SHC(M3X16)SHEAR PL	16
				15
				14
				13
				12
				11
				10
				9
1	1	525889-2	ANVIL	8
				7
				6
				5
				4
				3
				2
1	1	525888-2	CRIMPER, WIRE	1
	-1	PART NO	DESCRIPTION	ITEM NO

QTY REQD PER ASSY — PARTS LIST

THIS DRAWING IS A CONTROLLED DOCUMENT.

DIMENSIONS: INCHES

TOLERANCES UNLESS OTHERWISE SPECIFIED:
0 PLC ± -
1 PLC ± -
2 PLC ± 0.5 [.02 IN]
3 PLC ± -
4 PLC ± -
ANGLES ± -

MATERIAL -
FINISH -

DWN M.CLIFFORD 22JAN03
CHK -
APVD F.BACKHURST 22JAN03
PRODUCT SPEC -
APPLICATION SPEC -
WEIGHT -

Tyco Electronics — Tyco Electronics Corporation, Harrisburg, PA 17105-3608

NAME: SIDE FEED HDM APPLICATOR

SIZE A1 | CAGE CODE 00779 | DRAWING NO C-1157050 | RESTRICTED TO -

CUSTOMER DRAWING | SCALE - | SHEET 1 OF 1 | REV H

4805 (1/08)