DRAWING NO. ABT-0718220

3rd ANGLE PROJECTION

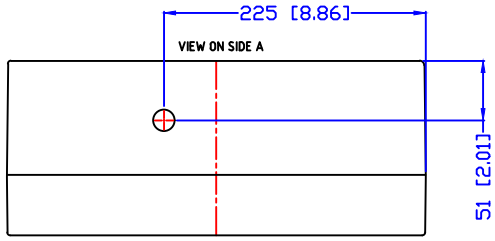

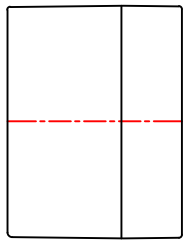

VIEW ON SIDE D

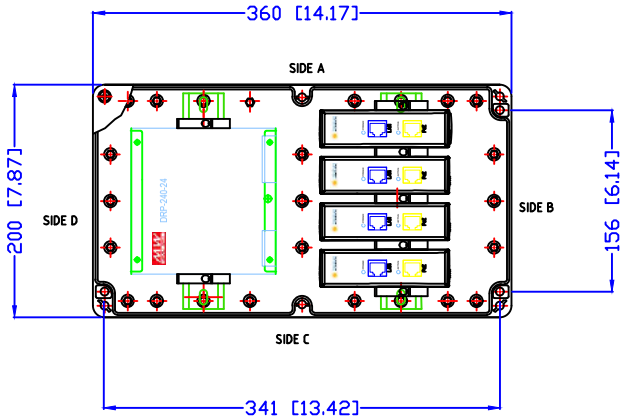

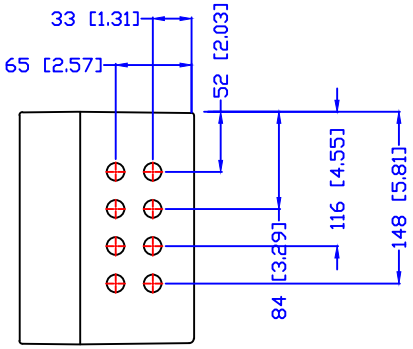

VIEW ON SIDE B

NOTES:

CLIENT ITEM No:	JB-PoE-4-24
BOX TYPE:	ZPT-18PC
MATERIAL:	POLYCARBONATE
FINISH:	RAL 7035
RATING:	NEMA 4X
TERMINALS:	XX
	XX
	7 x KD-3 495040 American Electrical to provide
	XX
DIN RAIL:	2 x MR35 500601 American Electrical to provide

ENTRIES & SIZES:

SIDE A	1 x pg11 thru (18.60mm)
SIDE B	8 x pg9 thru (15.20mm)
SIDE C	1 x pg11 thru (18.60mm
SIDE D	NONE

MEANWELL:	1 x DRP-240-48 American Electrical to provide
SOLIS ENERGY:	4 x PoE-24 American Electrical to provide
CLIENT LABEL:	AE-Po424

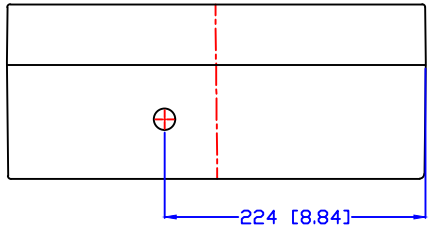

VIEW ON SIDE C

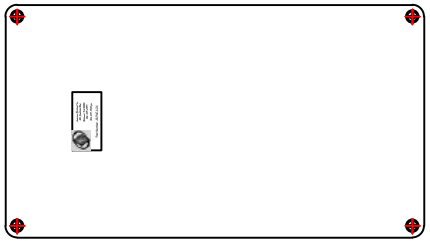

LID DETAIL

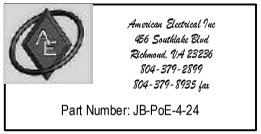

LABEL DETAIL

UNLESS OTHERWISE STATED ALL DIMENSIONS ARE IN MILLIMETRES & INCHES

drawn on CAD.....DO NOT MODIFY BY HAND!!!

Client :AMERICAN ELECTRICAL INC

SO Number :XX

Order No :XX

Item Nos :XX

Refer to drawings database for certificate schedule drawings

REV	DATE	REVISION	BY	CHK
x	x	x	x	x
x	x	x	x	x
B	09-05-2108	SIDE C ENTRY MOVED	GLA	PEF
A		AS ISSUED		

CHECKED: DATE:

SCALE N.T.S. DRAWN: GLA DATE: 08-28-2018

ABTECH
www.abtech-inc.com
A.B. Controls & Technology, Inc
1813 Rotary Drive
Humble TX 77338
Tel: 281-548-3424
email: sales@abtech-inc.com

Copyright © 2018
All rights reserved ABTECH

TITLE JB-PoE-4-24

A1

SHEET 1

ISO 2768-m

THE INFORMATION ON THIS DRAWING IS CONFIDENTIAL AND MUST NOT BE DISCLOSED TO A THIRD PARTY WITHOUT WRITTEN CONSENT

DRAWING NO. ABT-0718220