Panasonic
INDUSTRY

Your Committed Enabler

Products Catalog

Aluminum Electrolytic Capacitors

Radial Lead Type

IN Your Future

2023.6

Aluminum Electrolytic Capacitors（Radial lead type）INDEX

Item			Page
Safety and Legal Matters to Be Observed / Matters to Be Observed When Using This Product			1
Selection guide	Diagram		8
	Explanation of part numbers		9
	Lead taping radial lead type		10
	Packaging specifications		12
Series	FR-A	: 105 ℃ 3000 to 5000 h	13
	FS-A	: 105 ℃ 5000 to 10000 h	18
	FP-A	: 105 ℃ 4000 to 5000 h	23
	★ED-A	: 105 ℃ 8000 to 10000 h	25
	GA-A	: 105 ℃ 1000 h	28
	KA-A	: 85 ℃ 1000 h	30
	KA-A (Bi-polar)	: 85 ℃ 1000 h	32
	KS-A	: 85 ℃ 1000 h	34
	KS-A (Bi-polar)	: 85 ℃ 1000 h	36
Series	**This Series is no longer available for purchase in the country of Japan.**		
	★FC-A	: 105 ℃ 1000 to 5000 h	38
	★FK-A	: 105 ℃ 3000 to 5000 h	48
	FM-A	: 105 ℃ 2000 to 7000 h	53
	★EB-A	: 105 ℃ 5000 to 10000 h	57
	★EE-A	: 105 ℃ 8000 to 10000 h	60
	TA-A	: 125 ℃ 2000 h	64
	TP-A	: 125 ℃ 2000 to 5000 h	67
	HD-A	: 105 ℃ 1000 to 2000 h	69
	★NHG-A	: 105 ℃ 1000 to 2000 h	72
	GA-A (Bi-polar)	: 105 ℃ 1000 to 2000 h	77
	★M-A	: 85 ℃ 2000 h	79
	SU-A (Bi-polar)	: 85 ℃ 2000 h	84

★Some part numbers are discontinued.

Safety and Legal Matters to Be Observed

Product specifications and applications

■ Please be advised that this product and product specifications are subject to change without notice for improvement purposes. Therefore, please request and confirm the latest delivery specifications that explain the specifications in detail before the final design, or purchase or use of the product, regardless of the application. In addition, do not use this product in any way that deviates from the contents of the company's delivery specifications.

■ Unless otherwise specified in this catalog or the delivery specifications, this product is intended for use in general electronic equipment (AV products, home appliances, commercial equipment, office equipment, information and communication equipment, etc.).
When this product is used for the following special cases, please separately discuss the delivery specifications suited to each application with the company. These include applications requiring special quality and reliability, wherein their failures or malfunctions may directly threaten human life or cause harm to the human body (e.g.: space/aircraft equipment, transportation/traffic equipment, combustion equipment, medical equipment, disaster prevention/crime prevention equipment, safety equipment, etc.).

Safety design and product evaluation

■ Please ensure safety through protection circuits, redundant circuits, etc., in the customer's system design so that a defect in our company's product will not endanger human life or cause other serious damage.

■ This catalog shows the quality and performance of individual parts. The durability of parts varies depending on the usage environment and conditions. Therefore, please ensure to evaluate and confirm the state of each part after it has been mounted in your product in the actual operating environment before use.
If you have any doubts about the safety of this product, then please notify us immediately, and be sure to conduct a technical review including the above protection circuits and redundant circuits at your company.

Laws / Regulations / Intellectual property

■ The transportation of dangerous goods as designated by UN numbers, UN classifications, etc., does not apply to this product. In addition, when exporting products, product specifications, and technical information described in this catalog, please comply with the laws and regulations of the countries to which the products are exported, especially those concerning security export control.

■ Each model of this product complies with the RoHS Directive (Restriction of the use of hazardous substances in electrical and electronic equipment) (2011/65/EU and (EU) 2015/863). The date of compliance with the RoHS Directive and REACH Regulation varies depending on the product model.
Further, if you are using product models in stock and are not sure whether or not they comply with the RoHS Directive or REACH Regulation, please contact us by selecting "Sales Inquiry" from the inquiry form.

■ During the manufacturing process of this product and any of its components and materials to be used, Panasonic does not intentionally use ozone-depleting substances stipulated in the Montreal Protocol and specific bromine-based flame retardants such as PBBs (Poly-Brominated Biphenyls) / PBDEs (Poly-Brominated Diphenyl Ethers). In addition, the materials used in this product are all listed as existing chemical substances based on the Act on the Regulation of Manufacture and Evaluation of Chemical Substances.

■ With regard to the disposal of this product, please confirm the disposal method in each country and region where it is incorporated into your company's product and used.

■ The technical information contained in this catalog is intended to show only typical operation and application circuit examples of this product. This catalog does not guarantee that such information does not infringe upon the intellectual property rights of Panasonic or any third party, nor imply that the license of such rights has been granted.

Panasonic Industry will assume no liability whatsoever if the use of our company's products deviates from the contents of this catalog or does not comply with the precautions. Please be advised of these restrictions.

Matters to Be Observed When Using This Product

(Conductive polymer hybrid aluminum electrolytic capacitor / Aluminum electrolytic capacitor)

Use environments and cleaning conditions

■ This product (capacitor) is intended for standard general-purpose use in electronic equipment, and is not designed for use in the specific environments described below. Using the product in such specific environments or service conditions, therefore, may affect the performance of the product.
Check with us about the performance and reliability of the product first before using the product.

(1) Used at a temperature higher than the upper limit category temperature or lower than the lower limit category temperature.
(2) Used in an environment where the product is directly exposed to water, salt water, oil, etc., or in a liquid, such as water, oil, chemicals, and organic solvents.
(3) Used in an outdoor environment where the product is exposed to direct sunlight, ozone, radiation, UV-rays, etc., or in a dusty place.
(4) Used in a wet place (dew concentration on a resistor, water leakage, etc.), a place exposed to sea breeze, or a place filled with a corrosive gas, such as Cl_2, H_2S, NH_3, SO_2, or NO_X.
(5) Used in an environment filled with a toxic gas (hydrogen sulfide, sulfurous acid, nitrous acid, chlorine and chlorine compound, bromine and bromine compound, ammonia, etc.)
(6) Used in an environment where static electricity and electromagnetic waves are strong.
(7) Located close to heating component or a flammable material, such as a vinyl cable.
(8) Sealed with a resin, etc.
(9) Cleansed with a solvent, water, or a water-soluble cleaner, to remove solder flux after soldering.
(10) Used in an environment where an acidic or alkali atmosphere is present.
(11) Used in an environment where excessive vibration or impact exceeding a specified range is applied to the product (even if the applied vibration or impact is within the specified range, it may cause the product to resonate, in which a large vibration acceleration may be generated. Make sure to evaluate/check such vibrations or impacts applied to the product in an actual service condition).
(12) Used under a low atmospheric pressure condition or depressurized condition.

■ The capacitor withstands an immersion cleaning process where the board carrying the product is immersed in a cleaning solution of 60 °C or lower for less than 5 minutes and withstands an ultrasonic cleaning process as well. However, ensure to thoroughly rinse and dry it. Some cleaning methods erase or blur notes on the capacitor in some cases.
Some types of capacitors are not washable and some cleaning solutions cannot be used to clean a capacitor.
If you are not sure about which type of capacitor is not washable or which cleaning solution cannot be used, please contact us. Solvents you can use to clean the board are as follows.

Pine Alpha ST-100S, Aqua Cleaner 210SEP, Cleanthrough 750H/750L/710M, Sun Elec B-12, Techno Cleaner 219, Cold Cleaner P3-375, DK Be clear CW-5790, Terpene Cleaner EC-7R, Techno Care FRW-17/FRW-1/FRV-1

■ Keep the cleaning solution under strict contamination control (conductivity, pH, specific gravity, water content, etc.).
A contaminated cleaning solution will show a high chlorine concentration, thereby corroding the interior of the capacitor in some cases. Keep the flux concentration in the cleaning solution at a 2% mass or less.

■ Unless otherwise specified in the specifications, avoid cleaning the capacitor with a halogen-based solvent, an alkaline solvent, a petroleum-based solvent, xylene, or acetone. Using a halogen-based solvent may result in a case where the solvent infiltrates (leaks) into the capacitor and break-down releasing chlorine, which reacts with aluminum which can corrode the capacitor interior. 1-1-1 trichloroethane is particularly harmful to a capacitor. Never use it to clean a capacitor.
A alkaline solvent may corrode (dissolve) an aluminum case, a petroleum-based solvent and xylene may damage the sealing rubber and accelerate its deterioration, and acetone may erase notes on the capacitor.
To protect the global environment, refrain from using an ozone depleting substance as the cleaning solution.

■ Right after the board cleaning, subject the capacitor to a forced drying process so that no cleaning solution remains between the sealing part of the capacitor and the printed board.
Set a drying temperature equal to or lower than the upper limit category temperature.

■ When an adhesive or coating agent is used to fix the capacitor and prevent dampening of the board, specific types of solvents included in some adhesives or coating agents may corrode the capacitor. Select a non-halogen solvent for the material making up the adhesive or coating agent. Do not use a chloroprene-based polymer.
Solidify and dry the adhesive or coating agent sufficiently to prevent its solvent component from remaining on the capacitor.
Leave at least 1/3 of the sealing part unsealed on the surface to which the adhesive or coating agent is applied.

- Do not use the product in a structure sealed by potting or molding. The pressure of a molding resin on a capacitor may deform the capacitor. In addition, the resin covering the capacitor may affect its heat dissipation performance or may leak into the product. These factors lead to the significant degradation of the capacitor's characteristics and reliability. There is also a concern that an electrolytic solution permeating the sealing rubber may agglomerate and cause a short circuit.
- When the capacitor is used in a circuit where an impact voltage is applied or a high voltage is applied in a short period (transient phenomenon) or a high pulse voltage is applied, make sure to use the capacitor at a voltage equal to or lower than its rated voltage.
- The product contains an electrolytic solution. Improper use of the capacitor leads not only to the rapid degradation of its characteristics but also to electrolytic solution leakage. These problems damage the circuit board and may lead to destruction of the entire circuit set.

Response to anomalies and handling conditions

- When you see gas coming out of an activated pressure relief valve of a capacitor during use of a circuit set, turn off the main power supply of the circuit set or pull the power cord plug out of the wall-outlet. If you leave the power supply on and the capacitor short-circuits, it will damage the circuit, or the gas can turn into a liquid, which will cause the circuit to short. In the worst case scenarios, these events may develop into a more serious incident, such as burnout of the circuit set. The gas coming out of the pressure relief valve of a capacitor is not smoke, but is the electrolytic solution in its gaseous state.
- When the pressure valve of the capacitor is activated, it emits a high-temperature gas of over 100 °C. Do not bring your face near the valve. In case the gas jetting out of the valve gets in your eyes or comes into your mouth, wash your eyes with water or rinse your mouth immediately. If the gas hits your skin, wash it away with soap.
- If you touch a terminal of the product during use of the circuit set, you will get an electric shock. The aluminum case of the product has an exposed part with no insulation. Do not touch the exposed part because it is as dangerous as the terminal.
- Do not create a short circuit between terminals of the product by inserting a conductor therebetween. Do not splash a conductive solution, such as an acidic or alkali solution, on the capacitor. It puts the capacitor in a shorted state, which causes the circuit to fail and destroys the capacitor as well.
- When a silicone material containing a relatively large amount of a low-molecular-weight siloxane is located close to the product, it may cause the capacitor problems with its electrical performance.
- When electronic equipment having the capacitor built therein is exported to overseas markets, wooden packaging materials are fumigated with a halogen compound, such as methyl bromide. In such cases, if the packaging material subjected to the fumigation treatment is not dried sufficiently, halogen remaining on the packaging material may leach into the capacitor during transportation and trigger a corrosive reaction in the capacitor. When carrying out the fumigation treatment, carefully examine the dried packaging material to confirm that no halogen remains on the packaging material. Never fumigate the entire electronic equipment in its packaged state.

Reliability and product life

- The service life of the product is affected by service temperatures. In general, a 10 °C drop in the service temperature will double the service life. Use the capacitor at a temperature as low as possible from the upper limit category temperature.
- Using a capacitor under a temperature condition outside a specified temperature range causes heavy degradation of the capacitor characteristics, which may result in breakage of the capacitor. You need to confirm not only the ambient temperature and internal temperature of the capacitor but also the temperature of the capacitor's top surface, which is given by radiant heat from built-in heating elements (a power transistor, IC, resistance, etc.) and heat generated by self-heating induced by ripple current. Do not place a heating element on the back of the capacitor.

■ The product life is given by the following equation.

$$L2 = L1 \times 2^{\frac{T1-(T2+\Delta T)}{10}} \qquad \text{Where } T_1 \geqq T_2$$

L1 : Guaranteed life (h) at temperature T1 (°C)
L2 : Expected life (h) at temperature T2 (°C)
T1 : Upper category temperature (°C)
T2 : Ambient temperature of capacitor (°C)
⊿T : Temperature increase caused by ripple current (°C)

* In the case of a hybrid type, category temperature (°C) + temperature increase caused by rated ripple current (°C)

■ Do not use the product for a period longer than its specified service life. A capacitor with its service life ended may cause the following problems: rapid degradation of the product characteristics, short circuit, unnecessary activation of the pressure valve, electrolytic solution leakage, etc. Note that the estimated service life is not longer than 15 years due to the limited environment-resistant property of the sealing rubber.

■ When the capacitor is used under a high-temperature condition for a long period, minute cracks develop on the surface of the sealing rubber or the case surface turns brown in some cases. These phenomena, however, have no effects on the reliability of the capacitor.

■ A capacitor conforming to "AEC-Q200" refers to a capacitor having passed some or all of evaluation test items defined in AEC-Q200.
To know the detailed specifications of each capacitor or specific evaluation test scores, please contact us.
We issue a delivery specification sheet for each product ordered. Please confirm the delivery specification sheet when you place an order with us.

Circuit design and circuit board design

■ The electrical characteristics change as a result of temperature/frequency fluctuations. Take electrical characteristic changes into consideration when working out a circuit design.

(1) Temperature fluctuations
High-temperature condition : increase in leak current
Low-temperature condition : decrease in the capacitance, increase in the tangent to the loss angle, increase in the impedance (the hybrid type is excluded), etc.
(2) Frequency fluctuations
High-frequency condition : decrease in the capacitance, increase in the tangent to the loss angle, decrease in the impedance, etc.
Low-frequency condition : more heat generation by ripple current as a result of an increase in the equivalent series resistance

■ The group of factors described below may lead to rapid degradation of the capacitor characteristics, short circuit, or electrolytic solution leakage. They may give rise to sharp heat/gas generation, too, in which case the increasing internal pressure actuates the pressure valve, causes the electrolytic solution to leak out of the sealing part, and, in a worst-case scenario, causes an explosion or ignition incident. When a capacitor bursts, it may scatter flammable materials (electrolytic solution, etc.) in its surroundings.

(1) Reverse voltage: The capacitor has preset polarity. Do not apply a reverse voltage to the capacitor.
Confirm the polarity indicated on the capacitor and then use it.
(2) Charge/discharge: Avoid using the capacitor in a circuit that frequently repeats sharp charge/discharge cycles or a circuit that requires relatively slow but highly frequent charge/discharge cycles. In cases where you use the capacitor in such circuits, make sure to inform us of the charge/discharge conditions.
Ensure that a rush current does not exceed 100 A.
(3) ON/OFF: Avoid using the capacitor in an on/off circuit that repeatedly switches on and off more than 10,000 times a day. In cases where you use the product in such circuits, make sure to inform us of the circuit conditions, etc.
(4) Overvoltage: Do not apply an overvoltage higher than the rated voltage (higher than the surge voltage when the voltage application period is short). A peak value given by superposing a ripple voltage (AC component) on a DC voltage must be equal to or lower than the rated voltage.
(5) Ripple current: Do not allow an excessively large ripple current (larger than the rated ripple current specified in the specifications) to flow through the capacitor. Even if a ripple current flow in the capacitor is equal to or smaller than the rated ripple current, a low DC bias voltage may generate a reverse voltage flow in the capacitor. Keep the ripple current flow within a range in which no reverse voltage is generated.
Even if the ripple current flow is kept equal to or smaller than the rated ripple current, using the capacitor for a period longer than its service life intensifies the degradation of the ESR characteristics, resulting in an increase in internal heating caused by the ripple current. As a result, the pressure valve is actuated, the exterior case or rubber swells, the electrolytic solution leaks, and, in a worst-case scenario, the capacitor short-circuits and ignites or explodes.

- Because the impedance of the capacitor is close to the circuit resistance, capacitors connected in parallel in the circuit may damage the whole current balance, in which case, a ripple current higher than the rated ripple current may flow in some of the capacitors. To prevent concentration of ripple current on the low-impedance side, use capacitors with the same product number and avoid the partiality of cable impedances. Do not use capacitors connected in series.

- When the capacitor is mounted on a double-side wiring board, do not place the wiring pattern directly underneath where the product is mounted. In case the electrolytic solution leaks out, it may short-circuit the pattern and cause tracking or migration. Consider a case where the product is a radial lead capacitor and is mounted on a board with through-holes. In this case, if the sealing part of the capacitor and the board surface stick close to each other, solder flows up to the capacitor during a dip soldering process, which may cause short circuit between the anode and cathode of the capacitor. In such a case, the outer laminate of the product may be damaged. The position of holes, therefore, must be determined properly.

- When designing a printed board carrying radial lead capacitors, make through-holes across the gap equal to the gap between the leads (terminals) of the capacitor. If the gap between the through-holes is narrower or wider than the gap between the leads, stress is applied to the leads when the capacitor is inserted in the holes.
  This may result in increasing leak current, short circuit, wire breaking, or electrolytic solution leakage.

- A capacitor which has the pressure valve on the case must be provided with a space formed above the pressure valve so that the pressure valve operates without hinderance. When the product is 6.3 mm to 16 mm in diameter, form a space of 2 mm or larger. When the product is 18 mm in diameter, form a space of 3 mm or larger.
  If the space is not large enough, it will impair the operability of the pressure valve and may lead to an explosion incident.

- Design the circuit in such that the pattern, especially a line pattern carrying high voltage or large current, is not formed above the pressure valve. Upon its activation, the pressure valve emits a flammable high-temperature gas of over 100 ℃. This may cause a secondary accident, such as the gas condensing on the pattern and the wire sheathing being melted and catching on fire.

- Be careful with the resonance of the capacitor mounted on the board. When a large load is applied to the capacitor before and after its resonance point, it may cause the capacitor to come off or widely change its characteristics.

- Completely isolate the case of the capacitor from the cathode terminal and the circuit pattern.

- The laminate or outer sleeve covering of the product is for displaying information on the product and does not have a guaranteed insulating function.
  The laminate may turn brown under a high-temperature condition. However, that does not cause problems with markings recognition on the product surface or electrical performance.

Mounting conditions

- Do not reuse a capacitor that was incorporated in a circuit set and energized in the past. Do not use a capacitor that was dropped on the floor.
  Do not use a capacitor in its compressed form. Compressing the capacitor makes it less airtight, resulting in poor performance, shorter service life, and electrolytic solution leakage.

- A re-striking voltage is generated in a capacitor in some cases. In such a case, let the capacitor discharge through a resistor of about 1 kΩ.

- When a capacitor is kept in storage for a long period, you may find the leak current from the capacitor has increased. In such a case, make voltage adjustment through a resistor of about 1 kΩ.

- Before mounting the capacitor on the board, confirm the ratings (capacitance, rated voltage, etc.) and polarity of the capacitor. Before mounting a surface-mounted type capacitor, confirm its terminal dimensions and land size.
  Before mounting a radial lead type capacitor, confirm its terminal interval and hole interval. If the terminal interval is not the specified one, stress is applied to internal elements, which may cause problems, such as a short circuit and insufficient mounting strength.
  When the terminal interval and the hole interval of the radial lead type capacitor do not match and therefore the capacitor's leads need to be readjusted, make sure that the readjustment does not apply any stress to the capacitor's body.

- Confirm the applied pressure when using an automatically mounting process for a surface-mounted type capacitor. Excessive pressure may result in increasing leak current, short circuit, the capacitor coming off from the board, and the like. When automatically mounting the radial lead type capacitor, check the wear of a cutter for cutting the leads and confirm that the angle of clinching the leads is not too acute with regards to the board. Clinching the leads at too acute of an angle applies tensile stress to the leads, which may lead to destruction of the capacitor.

- Follow soldering conditions (preheating, soldering temperature/time, the number of times of soldering, etc.) specified in the specification sheet. A high peak temperature or a long heating time causes the degradation of electrical characteristics or a reduction in the service life. Note that the specified soldering conditions indicate conditions under which the degradation of capacitor characteristics do not occur but do not indicate conditions under which stable soldering can be performed. Check and set conditions under which stable soldering can be performed, on a case-by-case basis. Measure the temperature of the capacitor, using a thermocouple bonded to the top of the capacitor with an epoxy-based adhesive. This temperature measurement must be conducted in a mass-production setup.

- The surface-mounted type capacitor is soldered by reflow soldering only. It cannot be soldered by flow soldering or dip soldering. Carry out reflow soldering with an atmospheric heat transfer method using infrared hot air, etc.
  When carrying out two rounds of reflow processes, carry out the second reflow process after the capacitor's temperature settles down to a normal temperature. In the case of VPS reflow, a sharp rise in the capacitor temperature causes a change in the characteristics and appearance of the capacitor, which may give rise to a problem with capacitor mounting. We therefore recommend execution of VPS flow at a temperature rise rate of 3 °C/second or lower. For more information about this matter, please contact us.

- Reflow soldering, under the reflow conditions we recommend, might result in discoloring or swelling of the case or crack formation on the ink mark indicating the cathode. These minor problems, however, do not affect the reliability of the capacitor at all.

- A 6.3-mm diameter vibration-resistant capacitor has a structure that covers the auxiliary terminals to the sides of a seat plate. In cases where you confirm formation of a fillet on the sides of the auxiliary terminals by an image recognition means, etc., examine soldering conditions for the formation of a sufficient fillet on the auxiliary terminals in advance before carrying out the soldering process.
  Even if the formation of a sufficient fillet on the auxiliary terminals is not confirmed, a solder junction between the lower surface of the auxiliary terminals and the board ensures vibration-resistant performance, meaning the reliability of the capacitor is not affected.

- The radial lead type capacitor cannot be soldered by reflow soldering. Do not dip the capacitor body, except the leads, in solder. Heat from the solder raises the internal pressure of the capacitor and destroys it. Solder the capacitor according to the following soldering conditions: soldering temperature of 260 °C ±5 °C and soldering time of 10 seconds ±1 second.

- Ensure that other components do not come in contact with the capacitor during the soldering process. When a radial lead type capacitor is set in close contact with the board, check the soldered state of the capacitor well, because its sealing rubber has no venting structure.

- When manually soldering the capacitor, follow the soldering conditions (soldering temperature/time) specified in the specification sheet or adopt a soldering temperature of 350 °C and a soldering time of 3 seconds or less.
  When you need to remove a capacitor already soldered, remove it after the solder is melted sufficiently so that no stress is applied to the terminals of the capacitor. Be careful not to let the solder iron tip touch the capacitor.
  The solder iron touching the capacitor may damage the capacitor.

- When the temperature of the capacitor becomes extremely high due to preheating, solidification of the setting resin, etc., may cause the outer sleeve of the capacitor to shrink or crack. When treating the capacitor in a thermosetting furnace, etc., place the capacitor in an atmosphere of 150 °C for 2 minutes or less.

- Do not tilt or twist the capacitor soldered to a printed board or hold the capacitor to carry the board or hit the capacitor against something. Such actions apply a force to the internal elements through the terminals and may destroy the product.

- Using highly active halogenous (chlorine-based or bromic) solder flux poses a concern that residual solder flux will have negative impact on the performance and reliability of the capacitor. Check the influence of residual solder flux before using such solder flux.

Storage conditions

■ A capacitor left for a long period is prone to have a greater flow of leak current. This happens because the oxide film deteriorates under a no-load condition. Voltage application to the capacitor reduces the leak current.
However, at the start of voltage application, a large flow of film recovery current increases the leak current, which may cause a circuit failure, etc.

■ The storage period of a capacitor is 42 months from the shipment inspection day. However, the storage period of capacitors not listed in the following table is specified as 12 months.
Store the capacitor in a place where a normal temperature condition (5°C to 35°C) and a normal humidity condition (45% to 85%) are maintained and direct sunlight is blocked.

Product category	Series	Storage period
Hybrid type	All hybrid series	42 months from the shipment inspection day
Surface-mounted type other than the hybrid type	S (hot lead-free reflow), HA (hot lead-free reflow) HB (hot lead-free reflow, 5.4 mm in height) HC, HD, FCA, FC, FKA, FK, FKS, FP, FT, FH TG, TK, TP, TC, TCU, TQ	
Radial lead type other than the hybrid type	FC-A, FK-A, HD-A, TA-A, TP-A	

■ Avoid storing the capacitor in environments not specified in the delivery specification sheet or in the following environments or conditions.

(1) Used at a temperature higher than the upper limit category temperature or lower than the lower limit category temperature
(2) Environments where the capacitor is exposed to water, salt water, or oil
(3) Environments where dew concentrates on the capacitor
(4) Environments filled with a toxic gas (hydrogen sulfide, sulfurous acid, nitrous acid, chlorine and chlorine compound, bromine and bromine compound, ammonia, etc.)
(5) Environments where the product is exposed to ozone, radiation, UV-rays, etc.
(6) Environments where vibrations or impacts exceeding a specified range is applied to the capacitor

Reference information

Guidelines

Some of the product use guidelines described herein are excerpted from JEITA RCR-2367D "Safety application guide for fixed aluminum electrolytic capacitors for use in electronic equipment," a technical report issued by the Japan Electronics and Information Technology Industries Association on October 2017. For more detailed information, please see the above technical report.

Intellectual property

Panasonic Group provides customers with safe products and services. We are also making great efforts to protect our intellectual property rights for Panasonic Group products. Typical patents related to this product are as follows. (Hybrid type)

[U.S. patent]
USP Nos. 7497879, 7621970, 9208954, 9595396, 9966200, 10453618, 10559432, 10679800, 10685788, and 10790095.

[Japanese patent]
Japanese Patent No. 5360250

[European patent]
EP-A Nos. 1808875 and 2698802

Diagram

This Series is no longer available for purchase in the country of Japan.

Radial lead type

Long life / High ripple

Low impedance

- **EE-A** series — 105 ℃, 8000 to 10000 h
- **ED-A** series — 105 ℃, 8000 to 10000 h
- **TP-A** series — 135 ℃ / 1000 to 2000 h; 125 ℃ / 2000 to 5000 h
- **EB-A** series — 105 ℃, 5000 to 10000 h
- **TA-A** series — 125 ℃, 2000 h
- **FS-A** series — 105 ℃, 5000 to 10000 h
- **FR-A** series — 105 ℃, 5000 to 10000 h
- **FM-A** series — 105 ℃, 2000 to 7000 h
- **FP-A** series — 105 ℃, 4000 to 5000 h
- **HD-A** series — 105 ℃, 1000 to 2000 h
- **FK-A** series — 105 ℃, 3000 to 5000 h
- **FC-A** series — 105 ℃, 1000 to 5000 h
- **NHG-A** series — 105 ℃, 1000 to 2000 h
- **GA-A** series (7L) — 105 ℃, 1000 h
- (Bi-polar) **GA-A** series — 105 ℃, 1000 to 2000 h
- **M-A** series — 85 ℃, 2000 h
- (Bi-polar) **SU-A** series — 85 ℃, 2000 h

Miniaturized

- **KS-A/KA-A** series — 85 ℃, 1000 h
- (Bi-polar) **KS-A/KA-A** series — 85 ℃, 1000 h

Explanation of part numbers

Part number system

◇ Type 1（Series：FC-A, FK-A, FM-A, FR-A, FS-A, FP-A, EB-A, ED-A, EE-A, TA-A, TP-A, HD-A, GA-A）

EEU	FC	0J	272	□+B
Product classification 3 figures	Series code 2 figures	Voltage code 2 figures	Capacitance code 3 figures	Suffix+Taping of forming of terminal code 0 to 2 figures

Series	Code
FC-A (105 ℃ 1000 h to 5000 h)	FC
FK-A (105 ℃ 4000 h to 5000 h)	FK
FM-A (105 ℃ 4000 h to 7000 h)	FM
FR-A (105 ℃ 5000 h to 10000 h)	FR
FP-A (105 ℃ 4000 h to 5000 h)	FP
EB-A (105 ℃ 5000 h to 10000 h)	EB
ED-A (105 ℃ 8000 h to 10000 h)	ED
EE-A (105 ℃ 8000 h to 10000 h)	EE
TA-A (125 ℃ 2000 h)	TA
TP-A (125 ℃ 3000 h to 5000 h)	TP
HD-A (105 ℃ 2000 h)	HD
GA-A (105 ℃ 1000 h)	GA

R.voltage (V)	Code
6.3	0J
10	1A
16	1C
25	1E
35	1V
50	1H
63	1J
100	2A
160	2C
200	2D
250	2E
350	2V
400	2G
450	2W

Cap. (μF)	Code	Cap. (μF)	Code
1.5	1R5	390	391
2.2	2R2	470	471
3.3	3R3	510	511
4.7	4R7	560	561
5.6	5R6	680	681
6.8	6R8	820	821
10	100	1000	102
12	120	1200	122
15	150	1500	152
18	180	1600	162
22	220	1800	182
27	270	2000	202
33	330	2200	222
39	390	2700	272
47	470	3300	332
56	560	3900	392
68	680	4700	472
82	820	5100	512
100	101	5600	562
120	121	6800	682
150	151	8200	822
180	181	10000	103
220	221	12000	123
270	271	15000	153
330	331	22000	223

Taping of forming of terminal code
* Blank : Straight
* E : Lead forming
* B : Taping (Pitch 5.0, 7.5 mm)
* H : Taping (Pitch 2.5 mm)

◇ Type 2（Series：NHG-A, GA-A Bipolar, M-A）

ECA	0J	HG	101	□+B
Product classification 3 figures	Voltage code 2 figures	Series code 1 to 2 figures	Capacitance code 3 figures	Suffix+Taping of forming of terminal code 0 to 3 figures

R.voltage (V)	Code
6.3	0J
10	1A
16	1C
25	1E
35	1V
50	1H
63	1J
100	2A
160	2C
200	2D
250	2E
350	2V
400	2G
450	2W

Series	Code
NHG-A (105℃ 1000 h to 2000 h)	HG
GA-A Bipolar (105℃ 1000 h to 2000 h)	EN
M-A (85℃ 2000 h)	M

Cap. (μF)	Code	Cap. (μF)	Code
1.5	1R5	330	331
2.2	2R2	470	471
3.3	3R3	1000	102
4.7	4R7	2200	222
10	100	3300	332
22	220	4700	472
33	330	6800	682
47	470	12000	123
100	101	15000	153
220	221	22000	223

Taping of forming of terminal code
* Blank : Straight
* E : Lead forming
* B : Taping (Pitch 5.0, 7.5 mm)
* i : Taping (Pitch 2.5 mm)

◇ Type 3（Series：KA-A, KA-A Bipolar, KS-A, KS-A Bipolar, SU-A Bipolar）

ECEA	0J	N	472	□+B
Product classification 4 figures	Voltage code 2 figures	Series code 1 to 2 figures	Capacitance code 3 figures	Suffix+Taping of forming of terminal code 0 to 1 figures

R.voltage (V)	Code
4	0D
6.3	0J
10	1A
16	1C
25	1E
35	1V
50	1H

Series	Code
KA-A (85℃ 1000 h)	KA
KA-A Bipolar (85℃ 1000 h)	KN
KS-A (85℃ 1000 h)	KS
KS-A Bipolar (85℃ 1000 h)	SN
SU-A Bipolar (85℃ 2000 h)	N

Cap. (μF)	Code	Cap. (μF)	Code
2.2	2R2	220	221
3.3	3R3	330	331
4.7	4R7	470	471
10	100	1000	102
22	220	2200	222
33	330	3300	332
47	470	4700	472
100	101	6800	682

Taping of forming of terminal code
* Blank : Straight
* E : Lead forming
* B : Taping (Pitch 5.0, 7.5 mm)
* i : Taping (Pitch 2.5 mm)

Lead taping radial lead type

● Dimensions

Case size(mm) øD × L \ Lead space	2.5 mm	5.0 mm	7.5 mm
	Figure	Figure	Figure
4 × 5, 7	B	A	–
5 × 5, 7	B	A	–
6.3 × 5, 7	C	A	–
8 × 5, 7	C	E	–
5 × 11	C	D	–
6.3 × 11.2, 15	C	D	–

Case size(mm) øD × L \ Lead space	2.5 mm	5.0 mm	7.5 mm
	Figure	Figure	Figure
8 × 11.5, 15, 20	–	E	–
10 × 12.5, 16, 20, 25	–	F	–
12.5 × 15, 20, 25	–	G	–
16 × 15, 20, 25	–	–	H
18 × 15, 20, 25	–	–	H

Figure A (Lead space : 5.0 mm / øD×L : ø4×5, 7, ø5×5, 7, ø6.3×5, 7)

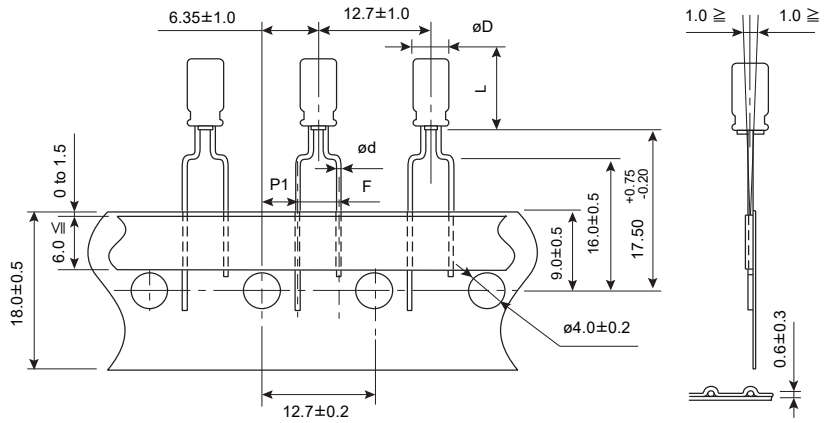

Unit : mm

Dimensions	Nominal	Tolerance
ød	0.45	±0.05
F	5.00	+0.8 / -0.2
P1	3.85	±0.5

Figure B (Lead space : 2.5 mm / øD×L : ø4×5, 7, ø5×5, 7)

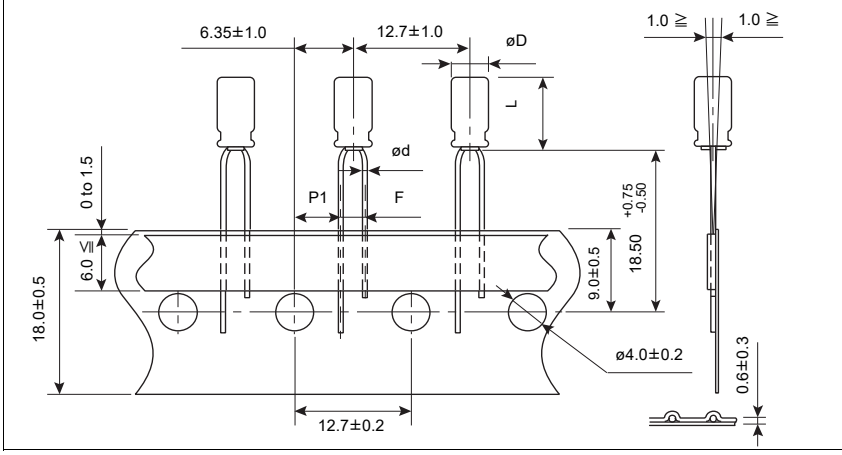

Unit : mm

Dimensions	Nominal	Tolerance
ød	0.45	±0.05
F	2.50	±0.5
P1	5.10	±0.5

Figure C (Lead space : 2.5 mm / øD×L : ø5×11, ø6.3×5, 7, 11.2, 15, ø8×5, 7)

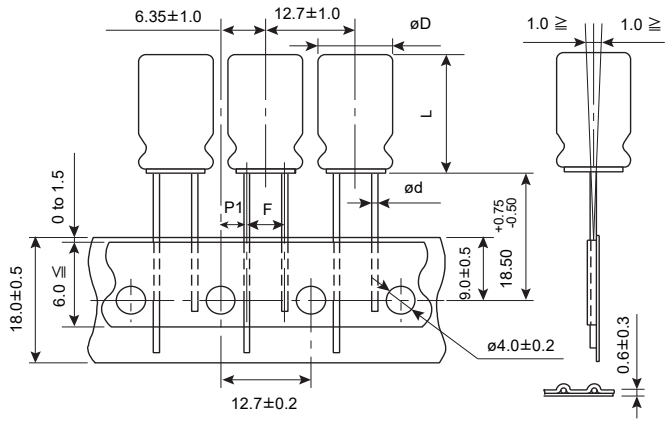

Unit : mm

Dimensions	Nominal	Tolerance
ød	0.45 0.50 : 5×11,6.3×11.2,15	±0.05
F	2.50	+0.5
P1	5.10	±0.5

Figure D (Lead space : 5.0 mm / øD×L : ø5×11, ø6.3×11.2, 15)

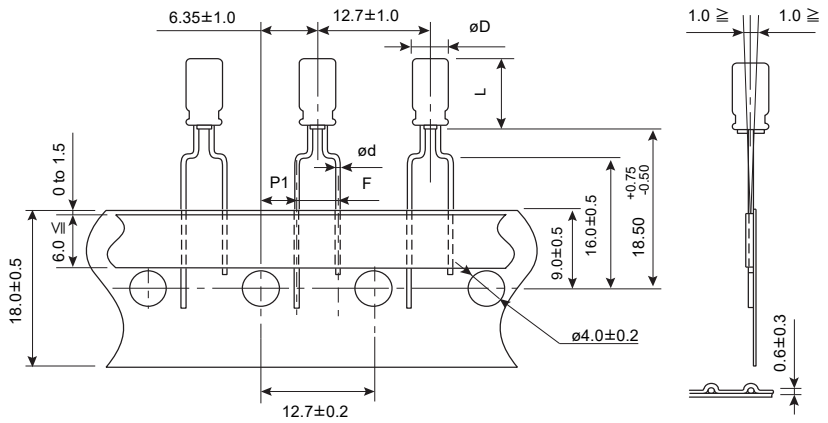

Unit : mm

Dimensions	Nominal	Tolerance
ød	0.50	±0.05
F	5.00	+0.8 / -0.2
P1	3.85	±0.5

Figure E (Lead space : 5 mm / øD×L : ø8×5, 7, 11.5, 15, 20)

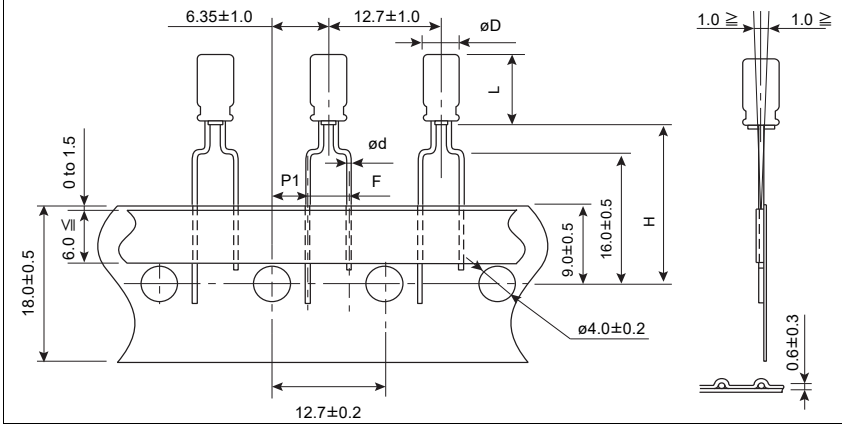

Unit : mm

Dimensions	Nominal		Tolerance
	ø8×11.5 to 20	ø8×5, 7	
Suffix code	B	BQ	
ød	0.60	0.45	±0.05
F	5.00		+0.8 / -02
P1	3.85		±0.5
H	20.00	18.50	+0.75 / -0.5

Figure F (Lead space : 5 mm / øD×L : ø10×12.5, 16, 20, 25)

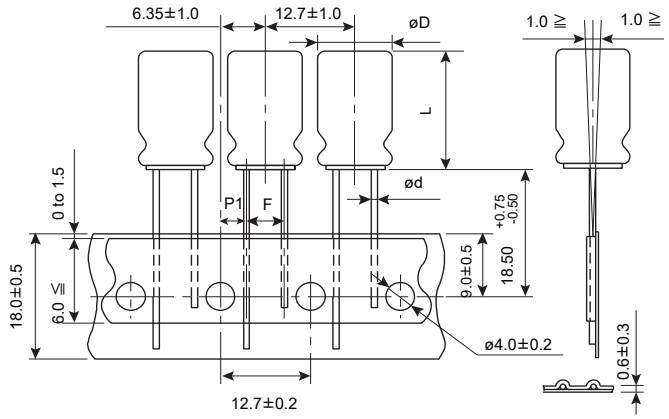

Unit : mm

Dimensions	Nominal	Tolerance
ød	0.60	±0.05
F	5.00	+0.8 / -02
P1	3.85	±0.5

Figure G (Lead space : 5 mm / øD×L : ø12.5×15, 20, 25)

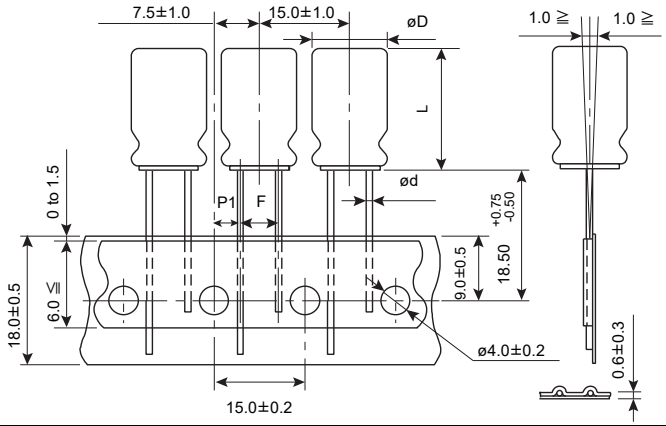

Unit : mm

Dimensions	Nominal	Tolerance
ød	0.60	±0.05
F	5.00	+0.8 / -02
P1	5.00	±0.5

Figure H (Lead space : 7.5 mm / øD×L : ø16×15, 20, 25, ø18×15, 20, 25)

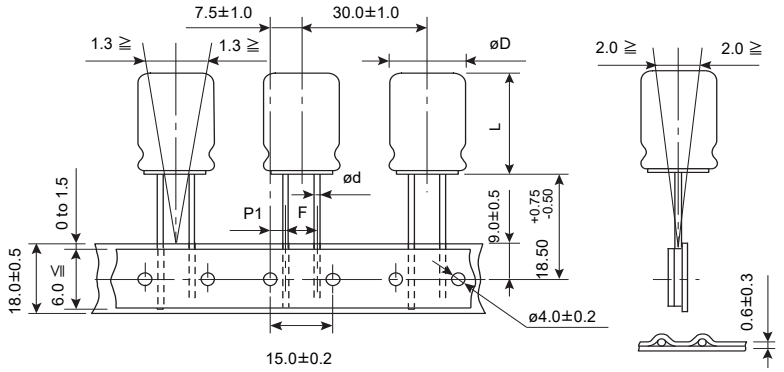

Unit : mm

Dimensions	Nominal	Tolerance
ød	0.80	±0.05
F	7.50	+0.5
P1	3.75	±0.5

Packaging Specifications

Unit : mm

Dimensions of outer carton box		Dimensions				
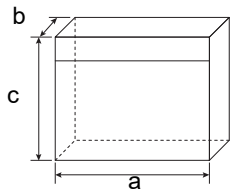		ø4 to ø5	ø6.3	ø8	ø10, ø12.5	ø16, ø18
	a	340 max.	340 max.	340 max.	340 max.	340 max.
	b	to 55 max.	to 55 max.	to 55 max.	55 to 66 max.	62 to 75 max.
	c	170 to 210 max.	270 max.	230 max.	170 to 270 max.	225 to 310 max.
	Packaging Qty.	2000 pcs.	2000 pcs.	1000 pcs.	500 pcs.	250 pcs.

- Lead forming type (Snap-in)

Lead formed Aluminium Electrolytic Capacitor for self mounting, for rationalization and upgrade of soldering process.

Shape of lead wire

øD	Dimensions
4, 5, 6.3, 8	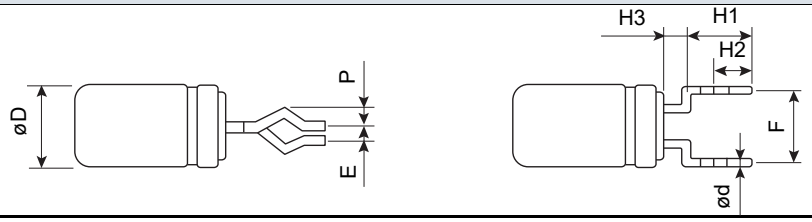
10, 12.5, 16, 18	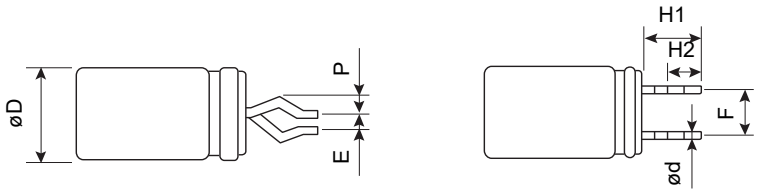

Dimensions

Unit : mm

øD	H1±0.5	H2	H3	F±0.5	P	E max.	ød	for PWB	
								hole dia. ø	thick ness
5.0	4.5	2.7	2.5	5.0	1.0	1.0	0.5	0.9	1.6
6.3	4.5	2.7	2.5	5.0	1.0	1.0	0.5	1.0	1.6
8.0	4.5	2.7	2.5	5.0	1.0	1.0	0.6	1.0	1.6
10.0	4.5	2.7	–	5.0	1.0	1.0	0.6	1.0	1.6
12.5	4.5	2.7	–	5.0	1.0 / 0.9	1.0	0.6 / 0.8	1.0 / 1.1	1.6
16.0	4.5	2.7	–	7.5	0.9	1.0	0.8	1.1	1.6
18.0	4.5	2.7	–	7.5	0.9	1.0	0.8	1.1	1.6

Series KA/KS Dimensions

Unit : mm

øD	H1±0.5	H2	H3±0.3	F±0.5	P	E max.	ød	for PWB	
								hole dia. ø	thick ness
4.0	4.5	2.7	1.5	5.0	0.95	1.0	0.45	0.9	1.6
5.0	4.5	2.7	1.5	5.0	0.95	1.0	0.45	0.9	1.6
6.3	4.5	2.7	1.5	5.0	0.95	1.0	0.45	0.9	1.6
8.0	4.5	2.7	1.5	5.0	0.95	1.0	0.45	0.9	1.6

Panasonic
INDUSTRY

Aluminum Electrolytic Capacitors

Radial Lead Type

FR-A series

Features

- Endurance : 105 ℃ 5000 h to 10000 h
- Low ESR (Same as FM Series)
- RoHS compliant

Country of origin

- Malaysia

Specifications

Category temp. range	–40 ℃ to +105 ℃									
Rated voltage range	6.3 V to 100 V									
Capacitance range	4.7 μF to 8200 μF									
Capacitance tolerance	±20 % (120 Hz / +20℃)									
Leakage current	I ≦ 0.01 CV (μA) After 2 minutes									
Dissipation factor (tan δ)	Rated voltage (V)	6.3	10	16	25	35	50	63	100	(120 Hz /+20℃)
	Dissipation factor (tan δ)	0.22	0.19	0.16	0.14	0.12	0.10	0.09	0.08	
	For capacitance value ≧ 1000 μF, add 0.02 per every 1000 μF.									
Endurance	After following life test with DC voltage and +105 ℃±2 ℃ ripple current value applied (The sum of DC and ripple peak voltage shall not exceed the rated working voltage) when the capacitors are restored to 20 ℃, the capacitors shall meet the limits specified bellow. Duration ø5×11, ø6.3×11.2 : 5000 h ø8×11.5, ø10×12.5 : 6000 h (✻ Only EEUFR1V331U (ø10×12.5) 5000 h) ø8×15, ø10×16 : 8000 h, ø8×20 : 9000 h ø10×20 to ø10×25, ø12.5×20 to ø12.5×35, ø16×20 to ø16×25 : 10000 h									
	Capacitance change	Within ±25 % of the initial value (6.3 V to 10 V : ±30 %)								
	Dissipation factor (tan δ)	≦ 200 % of the initial limit								
	DC leakage current	Within the initial limit								
Shelf life	After storage for 1000 h at +105 ℃±2 ℃ with no voltage applied and then being stabilized at +20 °C, capacitors shall meet the limits specified in endurance. (With voltage treatment)									

Frequency correction factor for ripple current

Cap. (μF) \ Freq. (Hz)	60	120	1 k	10 k	100 k
4.7 to 33	0.45	0.55	0.75	0.90	1.00
47 to 330	0.60	0.70	0.85	0.95	1.00
390 to 1000	0.65	0.75	0.90	0.98	1.00
1200 to 8200	0.75	0.80	0.95	1.00	1.00

Dimensions

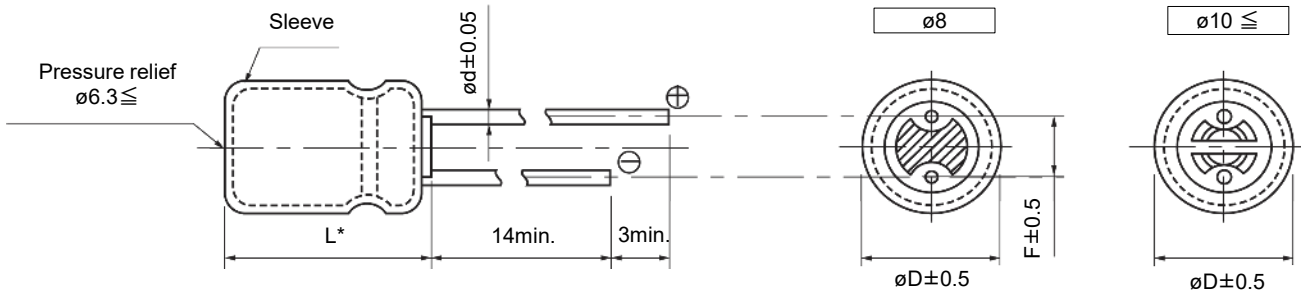

* L ≦ 16 : L±1.5
L ≧ 20 : L±2.0

Unit : mm

øD	5.0	6.3	8.0	10.0	12.5		16.0
L	—	—	—	—	12.5 to 25	30 to 35	—
ød	0.5	0.5	0.6	0.6	0.6	0.8	0.8
F	2.0	2.5	3.5	5.0	5.0	5.0	7.5

Design and specifications are each subject to change without notice. Ask factory for the current technical specifications before purchase and/or use.
Should a safety concern arise regarding this product, please be sure to contact us immediately.

Case size / Impedance / Ripple current

R. voltage / Case size (mm) (øD×L)	6.3 V to 35 V			50 V		
	Impedance*1 (Ω)		Ripple current*1 (mA rms)	Impedance*1 (Ω)		Ripple current*1 (mA rms)
	+20 ℃	-10 ℃	+105 ℃	+20 ℃	-10 ℃	+105 ℃
5 × 11	0.300	1.000	280	0.340	1.130	250
6.3 × 11.2	0.130	0.430	455	0.140	0.460	405
8 × 11.5	0.056	0.168	950	0.061	0.183	870
8 × 15	0.041	0.123	1240	0.045	0.135	1140
8 × 20	0.030	0.090	1560	0.033	0.099	1430
10 × 12.5	0.043	0.114	1290	0.042	0.126	1170
10 × 16	0.028	0.078	1790	0.030	0.090	1650
10 × 20	0.020	0.057	2180	0.023	0.069	1890
10 × 25	0.018	0.054	2470	0.022	0.066	2150
12.5 × 20	0.018	0.045	2600	0.022	0.055	2260
12.5 × 25	0.015	0.038	3190	0.018	0.045	2660
12.5 × 30	0.013	0.033	3630	0.016	0.040	3160
12.5 × 35	0.012	0.030	3750	0.014	0.035	3270
16 × 20	0.017	0.043	3300	0.019	0.048	2870
16 × 25	0.014	0.035	3820	0.016	0.040	3320

R. voltage / Case size (mm) (øD×L)	63 V		
	Impedance*1 (Ω)		Ripple current*1 (mA rms)
	+20 ℃	-10 ℃	+105 ℃
5 × 11	0.510	2.040	175
6.3 × 11.2	0.210	0.840	284
8 × 11.5	0.092	0.368	566
8 × 15	0.068	0.272	741
8 × 20	0.050	0.200	930
10 × 12.5	0.063	0.252	761
10 × 16	0.045	0.180	1073
10 × 20	0.035	0.140	1229
10 × 25	0.033	0.132	1500
12.5 × 20	0.033	0.125	1582
12.5 × 25	0.027	0.092	1995
12.5 × 30	0.024	0.082	2528
12.5 × 35	0.021	0.071	2780
16 × 20	0.029	0.093	2153
16 × 25	0.024	0.074	2988

R. voltage / Case size (mm) (øD×L)	100 V		
	Impedance*1 (Ω)		Ripple current*1 (mA rms)
	+20 ℃	-10 ℃	+105 ℃
10 × 20	0.084	0.336	1500

*1: 100 kHz

Characteristics list

Rated voltage (V)	Capacitance (±20 %) (μF)	Case size (mm)		Specification			Lead length (mm)				Part No.	Min. Packaging Q'ty (PCS)	
								Lead space					
		øD	L	Ripple current*1 (mA rms)	Impe-dance*2 (Ω)	Endu-rance (h)	Lead dia. (ød)	Straight	Taping ✻B	Taping ✻H		Straight leads	Taping
6.3	150	5.0	11.0	280	0.300	5000	0.5	2.0	5.0	2.5	EEUFR0J151( )	200	2000
	220	6.3	11.2	455	0.130	5000	0.5	2.5	5.0	2.5	EEUFR0J221( )	200	2000
	330	6.3	11.2	455	0.130	5000	0.5	2.5	5.0	2.5	EEUFR0J331( )	200	2000
	470	6.3	11.2	455	0.130	5000	0.5	2.5	5.0	2.5	EEUFR0J471( )	200	2000
	820	8.0	11.5	950	0.056	6000	0.6	3.5	5.0	—	EEUFR0J821( )	200	1000
	1000	8.0	11.5	950	0.056	6000	0.6	3.5	5.0	—	EEUFR0J102( )	200	1000
	1200	8.0	15.0	1240	0.041	8000	0.6	3.5	5.0	—	EEUFR0J122L( )	200	1000
		10.0	12.5	1290	0.043	6000	0.6	5.0	5.0	—	EEUFR0J122( )	200	500
	1500	8.0	20.0	1560	0.030	9000	0.6	3.5	5.0	—	EEUFR0J152L( )	200	1000
	1800	10.0	16.0	1790	0.028	8000	0.6	5.0	5.0	—	EEUFR0J182( )	200	500
	2200	10.0	20.0	2180	0.020	10000	0.6	5.0	5.0	—	EEUFR0J222( )	200	500
	2700	10.0	25.0	2470	0.018	10000	0.6	5.0	5.0	—	EEUFR0J272L( )	200	500
	3300	10.0	25.0	2470	0.018	10000	0.6	5.0	5.0	—	EEUFR0J332L( )	200	500
	3900	12.5	20.0	2600	0.018	10000	0.6	5.0	5.0	—	EEUFR0J392( )	200	500
	4700	12.5	25.0	3190	0.015	10000	0.6	5.0	5.0	—	EEUFR0J472( )	200	500
	5600	12.5	30.0	3630	0.013	10000	0.8	5.0	—	—	EEUFR0J562L	100	—
	6800	12.5	35.0	3750	0.012	10000	0.8	5.0	—	—	EEUFR0J682L	100	—
		16.0	20.0	3300	0.017	10000	0.8	7.5	7.5	—	EEUFR0J682S( )	100	250
	8200	16.0	25.0	3820	0.014	10000	0.8	7.5	7.5	—	EEUFR0J822( )	100	250
10	100	5.0	11.0	280	0.300	5000	0.5	2.0	5.0	2.5	EEUFR1A101( )	200	2000
	150	5.0	11.0	280	0.300	5000	0.5	2.0	5.0	2.5	EEUFR1A151( )	200	2000
	220	6.3	11.2	455	0.130	5000	0.5	2.5	5.0	2.5	EEUFR1A221( )	200	2000
	270	6.3	11.2	455	0.130	5000	0.5	2.5	5.0	2.5	EEUFR1A271( )	200	2000
	470	8.0	11.5	950	0.056	6000	0.6	3.5	5.0	—	EEUFR1A471( )	200	1000
	680	8.0	11.5	950	0.056	6000	0.6	3.5	5.0	—	EEUFR1A681( )	200	1000
	820	10.0	12.5	1290	0.043	6000	0.6	5.0	5.0	—	EEUFR1A821( )	200	500
	1000	10.0	16.0	1790	0.028	8000	0.6	5.0	5.0	—	EEUFR1A102( )	200	500
		8.0	15.0	1240	0.041	8000	0.6	3.5	5.0	—	EEUFR1A102L( )	200	1000
	1500	8.0	20.0	1560	0.030	9000	0.6	3.5	5.0	—	EEUFR1A152L( )	200	1000
		10.0	16.0	1790	0.028	8000	0.6	5.0	5.0	—	EEUFR1A152( )	200	500
	1800	10.0	20.0	2180	0.020	10000	0.6	5.0	5.0	—	EEUFR1A182( )	200	500
	2200	10.0	25.0	2470	0.018	10000	0.6	5.0	5.0	—	EEUFR1A222L( )	200	500
	3300	12.5	20.0	2600	0.018	10000	0.6	5.0	5.0	—	EEUFR1A332( )	200	500
	3900	12.5	25.0	3190	0.015	10000	0.6	5.0	5.0	—	EEUFR1A392( )	200	500
	4700	12.5	30.0	3630	0.013	10000	0.8	5.0	—	—	EEUFR1A472L	100	—
		16.0	20.0	3300	0.017	10000	0.8	7.5	7.5	—	EEUFR1A472S( )	100	250
	5600	12.5	35.0	3750	0.012	10000	0.8	5.0	—	—	EEUFR1A562L	100	—
	6800	12.5	35.0	3750	0.012	10000	0.8	5.0	—	—	EEUFR1A682L	100	—
		16.0	25.0	3820	0.014	10000	0.8	7.5	7.5	—	EEUFR1A682( )	100	250

*1: Ripple current (100 kHz / +105 ℃)
*2: Impedance (100 kHz / +20 ℃)
・When requesting taped product, please put the letter "B" or "H" be tween the "( )".
Lead wire pitch ✻B=5 mm, 7.5 mm, H=2.5 mm.
・Please refer to the page of “Taping dimensions”.

Characteristics list

Rated voltage (V)	Capacitance (±20 %) (μF)	Case size (mm)		Specification			Lead length (mm)				Part No.	Min. Packaging Q'ty (PCS)	
								Lead space					
		øD	L	Ripple current*1 (mA rms)	Impe-dance*2 (Ω)	Endu-rance (h)	Lead dia. (ød)	Straight	Taping ✻B	Taping ✻H		Straight leads	Taping
16	68	5.0	11.0	280	0.300	5000	0.5	2.0	5.0	2.5	EEUFR1C680( )	200	2000
	100	5.0	11.0	280	0.300	5000	0.5	2.0	5.0	2.5	EEUFR1C101( )	200	2000
	120	6.3	11.2	455	0.130	5000	0.5	2.5	5.0	2.5	EEUFR1C121( )	200	2000
	220	6.3	11.2	455	0.130	5000	0.5	2.5	5.0	2.5	EEUFR1C221( )	200	2000
	470	8.0	11.5	950	0.056	6000	0.6	3.5	5.0	—	EEUFR1C471( )	200	1000
	680	8.0	15.0	1240	0.041	8000	0.6	3.5	5.0	—	EEUFR1C681L( )	200	1000
		10.0	12.5	1290	0.043	6000	0.6	5.0	5.0	—	EEUFR1C681( )	200	500
	1000	8.0	20.0	1560	0.030	9000	0.6	3.5	5.0	—	EEUFR1C102L( )	200	1000
		10.0	16.0	1790	0.028	8000	0.6	5.0	5.0	—	EEUFR1C102( )	200	500
	1500	10.0	20.0	2180	0.020	10000	0.6	5.0	5.0	—	EEUFR1C152( )	200	500
		10.0	25.0	2470	0.018	10000	0.6	5.0	5.0	—	EEUFR1C152L( )	200	500
	1800	10.0	25.0	2470	0.018	10000	0.6	5.0	5.0	—	EEUFR1C182L( )	200	500
	2200	12.5	20.0	2600	0.018	10000	0.6	5.0	5.0	—	EEUFR1C222( )	200	500
	2700	12.5	25.0	3190	0.015	10000	0.6	5.0	5.0	—	EEUFR1C272( )	200	500
	3300	12.5	30.0	3630	0.013	10000	0.8	5.0	—	—	EEUFR1C332L	100	—
		16.0	20.0	3300	0.017	10000	0.8	7.5	7.5	—	EEUFR1C332S( )	100	250
	3900	12.5	35.0	3750	0.012	10000	0.8	5.0	—	—	EEUFR1C392L	100	—
		16.0	20.0	3300	0.017	10000	0.8	7.5	7.5	—	EEUFR1C392S( )	100	250
	4700	12.5	35.0	3750	0.012	10000	0.8	5.0	—	—	EEUFR1C472L	100	—
		16.0	25.0	3820	0.014	10000	0.8	7.5	7.5	—	EEUFR1C472( )	100	250
	5600	16.0	25.0	3820	0.014	10000	0.8	7.5	7.5	—	EEUFR1C562( )	100	250
25	47	5.0	11.0	280	0.300	5000	0.5	2.0	5.0	2.5	EEUFR1E470( )	200	2000
	68	5.0	11.0	280	0.300	5000	0.5	2.0	5.0	2.5	EEUFR1E680( )	200	2000
	100	6.3	11.2	455	0.130	5000	0.5	2.5	5.0	2.5	EEUFR1E101( )	200	2000
	150	6.3	11.2	455	0.130	5000	0.5	2.5	5.0	2.5	EEUFR1E151( )	200	2000
	220	8.0	11.5	950	0.056	6000	0.6	3.5	5.0	—	EEUFR1E221( )	200	1000
	330	8.0	11.5	950	0.056	6000	0.6	3.5	5.0	—	EEUFR1E331( )	200	1000
	390	8.0	15.0	1240	0.041	8000	0.6	3.5	5.0	—	EEUFR1E391L( )	200	1000
	470	8.0	15.0	1240	0.041	8000	0.6	3.5	5.0	—	EEUFR1E471Y( )	200	1000
		8.0	20.0	1560	0.030	9000	0.6	3.5	5.0	—	EEUFR1E471L( )	200	1000
		10.0	12.5	1290	0.043	6000	0.6	5.0	5.0	—	EEUFR1E471( )	200	500
	560	8.0	20.0	1560	0.030	9000	0.6	3.5	5.0	—	EEUFR1E561L( )	200	1000
	680	8.0	20.0	1560	0.030	9000	0.6	3.5	5.0	—	EEUFR1E681L( )	200	1000
		10.0	16.0	1790	0.028	8000	0.6	5.0	5.0	—	EEUFR1E681( )	200	500
	820	10.0	20.0	2180	0.020	10000	0.6	5.0	5.0	—	EEUFR1E821( )	200	500
	1000	10.0	20.0	2180	0.020	10000	0.6	5.0	5.0	—	EEUFR1E102( )	200	500
		10.0	25.0	2470	0.018	10000	0.6	5.0	5.0	—	EEUFR1E102L( )	200	500
	1200	10.0	25.0	2470	0.018	10000	0.6	5.0	5.0	—	EEUFR1E122L( )	200	500
	1500	12.5	20.0	2600	0.018	10000	0.6	5.0	5.0	—	EEUFR1E152( )	200	500
	1800	12.5	25.0	3190	0.015	10000	0.6	5.0	5.0	—	EEUFR1E182( )	200	500
		16.0	20.0	3300	0.017	10000	0.8	7.5	7.5	—	EEUFR1E182S( )	100	250
	2200	12.5	30.0	3630	0.013	10000	0.8	5.0	—	—	EEUFR1E222L	100	—
		16.0	20.0	3300	0.017	10000	0.8	7.5	7.5	—	EEUFR1E222S( )	100	250
	2700	12.5	35.0	3750	0.012	10000	0.8	5.0	—	—	EEUFR1E272L	100	—
		16.0	20.0	3300	0.017	10000	0.8	7.5	7.5	—	EEUFR1E272S( )	100	250
	3300	16.0	25.0	3820	0.014	10000	0.8	7.5	7.5	—	EEUFR1E332( )	100	250

*1: Ripple current (100 kHz / +105 ℃)
*2: Impedance (100 kHz / +20 ℃)
・When requesting taped product, please put the letter "B" or "H" be tween the "( )".
Lead wire pitch ✻B=5 mm, 7.5 mm, H=2.5 mm.
・Please refer to the page of “Taping dimensions”.

Design and specifications are each subject to change without notice. Ask factory for the current technical specifications before purchase and/or use.
Should a safety concern arise regarding this product, please be sure to contact us immediately.

Characteristics list

Rated voltage (V)	Capacitance (±20 %) (μF)	Case size (mm)		Specification			Lead length (mm)				Part No.	Min. Packaging Q'ty (PCS)	
								Lead space					
		øD	L	Ripple current*1 (mA rms)	Impe-dance*2 (Ω)	Endu-rance (h)	Lead dia. (ød)	Straight	Taping ✻B	Taping ✻H		Straight leads	Taping
35	33	5.0	11.0	280	0.300	5000	0.5	2.0	5.0	2.5	EEUFR1V330( )	200	2000
	68	6.3	11.2	455	0.130	5000	0.5	2.5	5.0	2.5	EEUFR1V680( )	200	2000
	100	8.0	11.5	950	0.056	6000	0.6	3.5	5.0	—	EEUFR1V101( )	200	1000
	180	8.0	11.5	950	0.056	6000	0.6	3.5	5.0	—	EEUFR1V181( )	200	1000
	220	8.0	11.5	950	0.056	6000	0.6	3.5	5.0	—	EEUFR1V221( )	200	1000
	270	8.0	15.0	1240	0.041	8000	0.6	3.5	5.0	—	EEUFR1V271L( )	200	1000
		10.0	12.5	1290	0.043	6000	0.6	5.0	5.0	—	EEUFR1V271( )	200	500
	330	10.0	12.5	1330	0.043	5000	0.6	5.0	5.0	—	EEUFR1V331U( )	200	500
	390	8.0	20.0	1560	0.030	9000	0.6	3.5	5.0	—	EEUFR1V391L( )	200	1000
	470	8.0	20.0	1560	0.030	9000	0.6	3.5	5.0	—	EEUFR1V471L( )	200	1000
		10.0	16.0	1790	0.028	8000	0.6	5.0	5.0	—	EEUFR1V471( )	200	500
	560	10.0	20.0	2180	0.020	10000	0.6	5.0	5.0	—	EEUFR1V561( )	200	500
	680	10.0	20.0	2180	0.020	10000	0.6	5.0	5.0	—	EEUFR1V681( )	200	500
		10.0	25.0	2470	0.018	10000	0.6	5.0	5.0	—	EEUFR1V681L( )	200	500
	820	10.0	25.0	2470	0.018	10000	0.6	5.0	5.0	—	EEUFR1V821L( )	200	500
	1000	12.5	20.0	2600	0.018	10000	0.6	5.0	5.0	—	EEUFR1V102( )	200	500
	1200	12.5	25.0	3190	0.015	10000	0.6	5.0	5.0	—	EEUFR1V122( )	200	500
	1500	12.5	30.0	3630	0.013	10000	0.8	5.0	—	—	EEUFR1V152L	100	—
		16.0	20.0	3300	0.017	10000	0.8	7.5	7.5	—	EEUFR1V152S( )	100	250
	1800	12.5	35.0	3750	0.012	10000	0.8	5.0	—	—	EEUFR1V182L	100	—
		16.0	25.0	3820	0.014	10000	0.8	7.5	7.5	—	EEUFR1V182( )	100	250
	2200	12.5	35.0	3750	0.012	10000	0.8	5.0	—	—	EEUFR1V222L	100	—
		16.0	25.0	3820	0.014	10000	0.8	7.5	7.5	—	EEUFR1V222( )	100	250
50	4.7	5.0	11.0	185	0.620	5000	0.5	2.0	5.0	2.5	EEUFR1H4R7( )	200	2000
	10	5.0	11.0	250	0.340	5000	0.5	2.0	5.0	2.5	EEUFR1H100( )	200	2000
	22	5.0	11.0	250	0.340	5000	0.5	2.0	5.0	2.5	EEUFR1H220( )	200	2000
	47	6.3	11.2	405	0.140	5000	0.5	2.5	5.0	—	EEUFR1H470( )	200	2000
	56	6.3	11.2	405	0.140	5000	0.5	2.5	5.0	2.5	EEUFR1H560( )	200	2000
	100	8.0	11.5	870	0.061	6000	0.6	3.5	5.0	—	EEUFR1H101( )	200	1000
	120	8.0	15.0	1140	0.045	8000	0.6	3.5	5.0	—	EEUFR1H121L( )	200	1000
	150	10.0	12.5	1170	0.042	6000	0.6	5.0	5.0	—	EEUFR1H151( )	200	500
	180	8.0	20.0	1430	0.033	9000	0.6	3.5	5.0	—	EEUFR1H181L( )	200	1000
	220	10.0	16.0	1650	0.030	8000	0.6	5.0	5.0	—	EEUFR1H221( )	200	500
	270	10.0	20.0	1890	0.023	10000	0.6	5.0	5.0	—	EEUFR1H271( )	200	500
	330	10.0	25.0	2150	0.022	10000	0.6	5.0	5.0	—	EEUFR1H331L( )	200	500
	470	12.5	20.0	2260	0.022	10000	0.6	5.0	5.0	—	EEUFR1H471( )	200	500
	560	12.5	25.0	2660	0.018	10000	0.6	5.0	5.0	—	EEUFR1H561( )	200	500
	680	12.5	30.0	3160	0.016	10000	0.8	5.0	—	—	EEUFR1H681L	100	—
	820	12.5	35.0	3270	0.014	10000	0.8	5.0	—	—	EEUFR1H821L	100	—
		16.0	20.0	2870	0.019	10000	0.8	7.5	7.5	—	EEUFR1H821S( )	100	250
	1000	16.0	25.0	3320	0.016	10000	0.8	7.5	7.5	—	EEUFR1H102( )	100	250
63	18	5.0	11.0	175	0.510	5000	0.5	2.0	5.0	2.5	EEUFR1J180( )	200	2000
	47	6.3	11.2	284	0.210	5000	0.5	2.5	5.0	2.5	EEUFR1J470( )	200	2000
	82	8.0	11.5	566	0.092	6000	0.6	3.5	5.0	—	EEUFR1J820( )	200	1000
	100	8.0	15.0	741	0.068	8000	0.6	3.5	5.0	—	EEUFR1J101L( )	200	1000
		10.0	12.5	761	0.063	6000	0.6	5.0	5.0	—	EEUFR1J101( )	200	500
	120	8.0	20.0	930	0.050	9000	0.6	3.5	5.0	—	EEUFR1J121L( )	200	1000
		10.0	16.0	1073	0.045	8000	0.6	5.0	5.0	—	EEUFR1J121( )	200	500
	150	8.0	20.0	930	0.050	9000	0.6	3.5	5.0	—	EEUFR1J151L( )	200	1000
		10.0	16.0	1073	0.045	8000	0.6	5.0	5.0	—	EEUFR1J151( )	200	500
	180	10.0	20.0	1229	0.035	10000	0.6	5.0	5.0	—	EEUFR1J181( )	200	500
	220	10.0	25.0	1500	0.033	10000	0.6	5.0	5.0	—	EEUFR1J221L( )	200	500
	270	10.0	20.0	1229	0.035	10000	0.6	5.0	5.0	—	EEUFR1J271U( )	200	500
		10.0	25.0	1500	0.033	10000	0.6	5.0	5.0	—	EEUFR1J271L( )	200	500
		12.5	20.0	1582	0.033	10000	0.6	5.0	5.0	—	EEUFR1J271( )	200	500
	330	12.5	20.0	1582	0.033	10000	0.6	5.0	5.0	—	EEUFR1J331( )	200	500
	390	12.5	25.0	1995	0.027	10000	0.6	5.0	5.0	—	EEUFR1J391( )	200	500
	470	12.5	25.0	1995	0.027	10000	0.6	5.0	5.0	—	EEUFR1J471( )	200	500
	560	12.5	30.0	2528	0.024	10000	0.8	5.0	—	—	EEUFR1J561L	100	—
		16.0	20.0	2153	0.029	10000	0.8	7.5	7.5	—	EEUFR1J561S( )	100	250
	680	12.5	35.0	2780	0.021	10000	0.8	5.0	—	—	EEUFR1J681L	100	—
	820	16.0	25.0	2988	0.024	10000	0.8	7.5	7.5	—	EEUFR1J821( )	100	250
100	100	10.0	20.0	1500	0.084	10000	0.6	5.0	5.0	—	EEUFR2A101( )	200	500

*1: Ripple current (100 kHz / +105 ℃)

*2: Impedance (100 kHz / +20 ℃)

・When requesting taped product, please put the letter "B" or "H" be tween the "( )".
Lead wire pitch ✻B=5 mm, 7.5 mm, H=2.5 mm.

・Please refer to the page of “Taping dimensions”.

Design and specifications are each subject to change without notice. Ask factory for the current technical specifications before purchase and/or use.
Should a safety concern arise regarding this product, please be sure to contact us immediately.

Panasonic
INDUSTRY

Aluminum Electrolytic Capacitors

Radial Lead Type

FS-A series

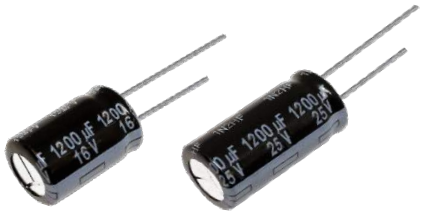

Features

- Endurance : 105 ℃ 5000 h to 10000 h
- Low ESR, Miniaturized (1 size smaller than series FR)
- RoHS compliant

Country of origin

- Malaysia

Specifications

Category temp. range	–40 ℃ to +105 ℃											
Rated voltage range	6.3 V to 100 V											
Capacitance range	27 μF to 10000 μF											
Capacitance tolerance	±20 % (120 Hz / +20℃)											
Leakage current	I ≦ 0.01 CV (μA) After 2 minutes											
Dissipation factor (tan δ)	Rated voltage（V）	6.3	10	16	25	35	50	63	80	100	(120 Hz /+20℃)	
	Dissipation factor（tan δ）	0.22	0.19	0.16	0.14	0.12	0.10	0.09	0.08	0.08		
	For capacitance value ≧ 1000 μF, add 0.02 per every 1000 μF.											
Endurance	After following life test with DC voltage and +105 ℃±2 ℃ ripple current value applied (The sum of DC and ripple peak voltage shall not exceed the rated working voltage) when the capacitors are restored to 20 ℃, the capacitors shall meet the limits specified bellow. Duration ø5×11, ø6.3×11.2 : 5000 h ø8×11.5, ø10×12.5 : 6000 h ø8×15, ø10×16 : 8000 h, ø8×20 : 9000 h ø10×20 to ø10×25, ø12.5×20 to ø12.5×35, ø16×20 to ø16×25 : 10000 h											
	Capacitance change	Within ±25 % of the initial value (6.3 V to 10 V : ±30 %)										
	Dissipation factor (tan δ)	≦ 200 % of the initial limit										
	DC leakage current	Within the initial limit										
Shelf life	After storage for 1000 h at +105 ℃±2 ℃ with no voltage applied and then being stabilized at +20 ℃, capacitors shall meet the limits specified in endurance. (With voltage treatment)											

Frequency correction factor for ripple current

Cap. (μF) \ Freq. (Hz)	60	120	1 k	10 k	100 k to
27 to 33	0.45	0.55	0.75	0.90	1.00
47 to 330	0.60	0.70	0.85	0.95	1.00
390 to 1000	0.65	0.75	0.90	0.98	1.00
1200 to 10000	0.75	0.80	0.95	1.00	1.00

Dimensions

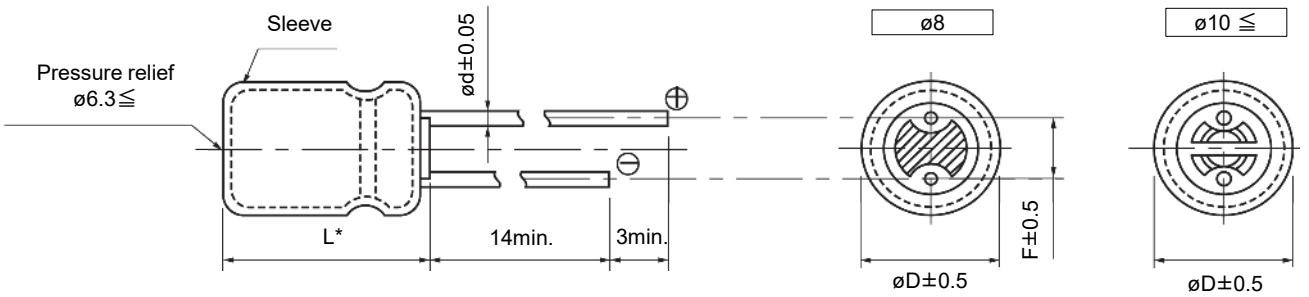

* L ≦ 16 : L±1.5
L ≧ 20 : L±2.0

Unit : mm

øD	5.0	6.3	8.0	10.0	12.5		16.0
L	—	—	—	—	12.5 to 25	30 to 35	—
ød	0.5	0.5	0.6	0.6	0.6	0.8	0.8
F	2.0	2.5	3.5	5.0	5.0	5.0	7.5

Design and specifications are each subject to change without notice. Ask factory for the current technical specifications before purchase and/or use.
Should a safety concern arise regarding this product, please be sure to contact us immediately.

Case size / Impedance / Ripple current

R. voltage / Case size (mm) (øD×L)	6.3 V to 35 V			50 V		
	Impedance*1 (Ω)		Ripple current*1 (mA rms)	Impedance*1 (Ω)		Ripple current*1 (mA rms)
	+20 ℃	-10 ℃	+105 ℃	+20 ℃	-10 ℃	+105 ℃
5 × 11	0.300	1.000	280	0.340	1.130	250
6.3 × 11.2	0.130	0.430	455	—	—	—
8 × 11.5	0.056	0.168	950	—	—	—
8 × 15	0.041	0.123	1240	0.045	0.135	1140
8 × 20	0.030	0.090	1560	0.033	0.099	1430
10 × 12.5	0.043	0.114	1290	—	—	—
10 × 16	0.028	0.078	1790	—	—	—
10 × 20	0.020	0.057	2180	0.023	0.069	1890
10 × 25	0.018	0.054	2470	0.022	0.066	2150
12.5 × 20	0.018	0.045	2600	—	—	—
12.5 × 25	0.015	0.038	3190	0.018	0.045	2660
12.5 × 30	0.013	0.033	3630	0.016	0.040	3160
12.5 × 35	0.012	0.030	3750	0.014	0.035	3270
16 × 20	0.017	0.043	3300	—	—	—
16 × 25	0.014	0.035	3820	0.016	0.040	3320

R. voltage / Case size (mm) (øD×L)	63 V			80 V to 100 V		
	Impedance*1 (Ω)		Ripple current*1 (mA rms)	Impedance*1 (Ω)		Ripple current*1 (mA rms)
	+20 ℃	-10 ℃	+105 ℃	+20 ℃	-10 ℃	+105 ℃
5 × 11	0.510	2.040	175	—	—	—
6.3 × 11.2	—	—	—	—	—	—
8 × 11.5	—	—	—	0.160	0.720	490
8 × 15	0.068	0.272	741	0.112	0.504	590
8 × 20	0.050	0.200	930	0.096	0.432	810
10 × 12.5	0.063	0.252	761	0.112	0.448	600
10 × 16	0.045	0.180	1073	0.072	0.288	930
10 × 20	—	—	—	0.054	0.224	1120
10 × 25	0.033	0.132	1500	0.044	0.176	1200
12.5 × 20	0.033	0.125	1582	0.043	0.135	1400
12.5 × 25	0.027	0.092	1995	0.034	0.108	1800
12.5 × 30	—	—	—	0.030	0.099	2200
12.5 × 35	0.021	0.071	2780	0.023	0.070	2380
16 × 20	0.029	0.093	2153	0.032	0.108	1450
16 × 25	0.024	0.074	2988	0.025	0.076	2500

*1: 100 kHz

Characteristics list

Rated voltage (V)	Capacitance (±20 %) (μF)	Case size (mm)		Specification			Lead length (mm)				Part No.	Min. Packaging Q'ty (PCS)	
								Lead space					
		øD	L	Ripple current*1 (mA rms)	Impe-dance*2 (Ω)	Endu-rance (h)	Lead dia. (ød)	Straight	Taping ✻B	Taping ✻H		Straight leads	Taping
6.3	220	5.0	11.0	280	0.300	5000	0.5	2.0	5.0	2.5	EEUFS0J221( )	200	2000
	1500	8.0	15.0	1240	0.041	8000	0.6	3.5	5.0	—	EEUFS0J152L( )	200	1000
		10.0	12.5	1290	0.043	6000	0.6	5.0	5.0	—	EEUFS0J152( )	200	500
	1800	8.0	20.0	1560	0.030	9000	0.6	3.5	5.0	—	EEUFS0J182L( )	200	1000
	2000	8.0	20.0	1560	0.030	9000	0.6	3.5	5.0	—	EEUFS0J202L( )	200	1000
		10.0	16.0	1790	0.028	8000	0.6	5.0	5.0	—	EEUFS0J202( )	200	500
	2200	10.0	16.0	1790	0.028	8000	0.6	5.0	5.0	—	EEUFS0J222( )	200	500
	2700	10.0	20.0	2180	0.020	10000	0.6	5.0	5.0	—	EEUFS0J272( )	200	500
	3300	10.0	20.0	2180	0.020	10000	0.6	5.0	5.0	—	EEUFS0J332( )	200	500
	3900	10.0	25.0	2470	0.018	10000	0.6	5.0	5.0	—	EEUFS0J392L( )	200	500
	4700	12.5	20.0	2600	0.018	10000	0.6	5.0	5.0	—	EEUFS0J472( )	200	500
	5100	12.5	25.0	3190	0.015	10000	0.6	5.0	5.0	—	EEUFS0J512( )	200	500
	5600	12.5	25.0	3190	0.015	10000	0.6	5.0	5.0	—	EEUFS0J562( )	200	500
	6200	12.5	30.0	3630	0.013	10000	0.8	5.0	—	—	EEUFS0J622L	100	—
	6800	12.5	30.0	3630	0.013	10000	0.8	5.0	—	—	EEUFS0J682L	100	—
	7500	12.5	35.0	3750	0.012	10000	0.8	5.0	—	—	EEUFS0J752L	100	—
		16.0	20.0	3300	0.017	10000	0.8	7.5	7.5	—	EEUFS0J752S( )	100	250
	8200	12.5	35.0	3750	0.012	10000	0.8	5.0	—	—	EEUFS0J822L	100	—
		16.0	20.0	3300	0.017	10000	0.8	7.5	7.5	—	EEUFS0J822S( )	100	250
	9100	16.0	25.0	3820	0.014	10000	0.8	7.5	7.5	—	EEUFS0J912( )	100	250
	10000	16.0	25.0	3820	0.014	10000	0.8	7.5	7.5	—	EEUFS0J103( )	100	250
10	180	5.0	11.0	280	0.300	5000	0.5	2.0	5.0	2.5	EEUFS1A181( )	200	2000
	330	6.3	11.2	455	0.130	5000	0.5	2.5	5.0	2.5	EEUFS1A331( )	200	2000
	820	8.0	11.5	950	0.056	6000	0.6	3.5	5.0	—	EEUFS1A821( )	200	1000
	1000	10.0	12.5	1290	0.043	6000	0.6	5.0	5.0	—	EEUFS1A102( )	200	500
	1200	8.0	15.0	1240	0.041	8000	0.6	3.5	5.0	—	EEUFS1A122L( )	200	1000
		10.0	12.5	1290	0.043	6000	0.6	5.0	5.0	—	EEUFS1A122( )	200	500
	1800	8.0	20.0	1560	0.030	9000	0.6	3.5	5.0	—	EEUFS1A182L( )	200	1000
		10.0	16.0	1790	0.028	8000	0.6	5.0	5.0	—	EEUFS1A182( )	200	500
	2000	10.0	20.0	2180	0.020	10000	0.6	5.0	5.0	—	EEUFS1A202( )	200	500
	2200	10.0	20.0	2180	0.020	10000	0.6	5.0	5.0	—	EEUFS1A222( )	200	500
	2700	10.0	25.0	2470	0.018	10000	0.6	5.0	5.0	—	EEUFS1A272L( )	200	500
	3600	12.5	20.0	2600	0.018	10000	0.6	5.0	5.0	—	EEUFS1A362( )	200	500
	4700	12.5	25.0	3190	0.015	10000	0.6	5.0	5.0	—	EEUFS1A472( )	200	500
	5100	12.5	30.0	3630	0.013	10000	0.8	5.0	—	—	EEUFS1A512L	100	—
	5600	12.5	30.0	3630	0.013	10000	0.8	5.0	—	—	EEUFS1A562L	100	—
		16.0	20.0	3300	0.017	10000	0.8	7.5	7.5	—	EEUFS1A562S( )	100	250
	7500	12.5	35.0	3750	0.012	10000	0.8	5.0	—	—	EEUFS1A752L	100	—
	8200	16.0	25.0	3820	0.014	10000	0.8	7.5	7.5	—	EEUFS1A822( )	100	250

*1: Ripple current (100 kHz / +105 ℃)
*2: Impedance (100 kHz / +20 ℃)
・When requesting taped product, please put the letter "B" or "H" be tween the "( )".
Lead wire pitch ✻B=5 mm, 7.5 mm, H=2.5 mm.
・Please refer to the page of “Taping dimensions”.

Characteristics list

Rated voltage (V)	Capacitance (±20 %) (μF)	Case size (mm)		Specification			Lead length (mm)				Part No.	Min. Packaging Q'ty (PCS)	
								Lead space					
		øD	L	Ripple current*1 (mA rms)	Impe-dance*2 (Ω)	Endu-rance (h)	Lead dia. (ød)	Straight	Taping ✻B	Taping ✻H		Straight leads	Taping
16	120	5.0	11.0	280	0.300	5000	0.5	2.0	5.0	2.5	EEUFS1C121( )	200	2000
	510	8.0	11.5	950	0.056	6000	0.6	3.5	5.0	—	EEUFS1C511( )	200	1000
	820	8.0	15.0	1240	0.041	8000	0.6	3.5	5.0	—	EEUFS1C821L( )	200	1000
		10.0	12.5	1290	0.043	6000	0.6	5.0	5.0	—	EEUFS1C821( )	200	500
	1200	8.0	20.0	1560	0.030	9000	0.6	3.5	5.0	—	EEUFS1C122L( )	200	1000
		10.0	16.0	1790	0.028	8000	0.6	5.0	5.0	—	EEUFS1C122( )	200	500
	1800	10.0	20.0	2180	0.020	10000	0.6	5.0	5.0	—	EEUFS1C182( )	200	500
	2200	10.0	25.0	2470	0.018	10000	0.6	5.0	5.0	—	EEUFS1C222L( )	200	500
	2400	12.5	20.0	2600	0.018	10000	0.6	5.0	5.0	—	EEUFS1C242( )	200	500
	3300	12.5	25.0	3190	0.015	10000	0.6	5.0	5.0	—	EEUFS1C332( )	200	500
	3600	12.5	30.0	3630	0.013	10000	0.8	5.0	—	—	EEUFS1C362L	100	—
	3900	12.5	30.0	3630	0.013	10000	0.8	5.0	—	—	EEUFS1C392L	100	—
	4700	16.0	20.0	3300	0.017	10000	0.8	7.5	7.5	—	EEUFS1C472S( )	100	250
	5100	12.5	35.0	3750	0.012	10000	0.8	5.0	—	—	EEUFS1C512L	100	—
	6200	16.0	25.0	3820	0.014	10000	0.8	7.5	7.5	—	EEUFS1C622( )	100	250
25	1200	10.0	20.0	2180	0.020	10000	0.6	5.0	5.0	—	EEUFS1E122( )	200	500
	2200	12.5	25.0	3190	0.015	10000	0.6	5.0	5.0	—	EEUFS1E222( )	200	500
	3300	12.5	35.0	3750	0.012	10000	0.8	5.0	—	—	EEUFS1E332L	100	—
	3900	16.0	25.0	3820	0.014	10000	0.8	7.5	7.5	—	EEUFS1E392( )	100	250
35	330	8.0	15.0	1240	0.041	8000	0.6	3.5	5.0	—	EEUFS1V331L( )	200	1000
	820	10.0	20.0	2180	0.020	10000	0.6	5.0	5.0	—	EEUFS1V821( )	200	500
	1000	10.0	25.0	2470	0.018	10000	0.6	5.0	5.0	—	EEUFS1V102L( )	200	500
	1500	12.5	25.0	3190	0.015	10000	0.6	5.0	5.0	—	EEUFS1V152( )	200	500
	1800	16.0	20.0	3300	0.017	10000	0.8	7.5	7.5	—	EEUFS1V182S( )	100	250
	2700	16.0	25.0	3820	0.014	10000	0.8	7.5	7.5	—	EEUFS1V272( )	100	250
50	27	5.0	11.0	250	0.340	5000	0.5	2.0	5.0	2.5	EEUFS1H270( )	200	2000
	150	8.0	15.0	1140	0.045	8000	0.6	3.5	5.0	—	EEUFS1H151L( )	200	1000
	220	8.0	20.0	1430	0.033	9000	0.6	3.5	5.0	—	EEUFS1H221L( )	200	1000
	330	10.0	20.0	1890	0.023	10000	0.6	5.0	5.0	—	EEUFS1H331( )	200	500
	390	10.0	25.0	2150	0.022	10000	0.6	5.0	5.0	—	EEUFS1H391L( )	200	500
	680	12.5	25.0	2660	0.018	10000	0.6	5.0	5.0	—	EEUFS1H681( )	200	500
	820	12.5	30.0	3160	0.016	10000	0.8	5.0	—	—	EEUFS1H821L	100	—
	1000	12.5	35.0	3270	0.014	10000	0.8	5.0	—	—	EEUFS1H102L	100	—
	1200	16.0	25.0	3320	0.016	10000	0.8	7.5	7.5	—	EEUFS1H122( )	100	250
63	27	5.0	11.0	175	0.510	5000	0.5	2.0	5.0	2.5	EEUFS1J270( )	200	2000
	120	8.0	15.0	741	0.068	8000	0.6	3.5	5.0	—	EEUFS1J121L( )	200	1000
		10.0	12.5	761	0.063	6000	0.6	5.0	5.0	—	EEUFS1J121( )	200	500
	180	8.0	20.0	930	0.050	9000	0.6	3.5	5.0	—	EEUFS1J181L( )	200	1000
		10.0	16.0	1073	0.045	8000	0.6	5.0	5.0	—	EEUFS1J181( )	200	500
	330	10.0	25.0	1500	0.033	10000	0.6	5.0	5.0	—	EEUFS1J331L( )	200	500
	390	12.5	20.0	1582	0.033	10000	0.6	5.0	5.0	—	EEUFS1J391( )	200	500
	560	12.5	25.0	1995	0.027	10000	0.6	5.0	5.0	—	EEUFS1J561( )	200	500
	680	16.0	20.0	2153	0.029	10000	0.8	7.5	7.5	—	EEUFS1J681S( )	100	250
	820	12.5	35.0	2780	0.021	10000	0.8	5.0	—	—	EEUFS1J821L	100	—
	1000	16.0	25.0	2988	0.024	10000	0.8	7.5	7.5	—	EEUFS1J102( )	100	250

*1: Ripple current (100 kHz / +105 ℃)
*2: Impedance (100 kHz / +20 ℃)
・When requesting taped product, please put the letter "B" or "H" be tween the "( )".
Lead wire pitch ✻B=5 mm, 7.5 mm, H=2.5 mm.
・Please refer to the page of “Taping dimensions”.

Characteristics list

Rated voltage (V)	Capacitance (±20 %) (μF)	Case size (mm)		Specification			Lead length (mm)			Part No.	Min. Packaging Q'ty (PCS)	
								Lead space				
		øD	L	Ripple current*1 (mA rms)	Impe-dance*2 (Ω)	Endu-rance (h)	Lead dia. (ød)	Straight	Taping ✻B		Straight leads	Taping
80	47	8.0	11.5	490	0.160	6000	0.6	3.5	5.0	EEUFS1K470( )	200	1000
	56	8.0	11.5	490	0.160	6000	0.6	3.5	5.0	EEUFS1K560( )	200	1000
	68	8.0	15.0	590	0.112	8000	0.6	3.5	5.0	EEUFS1K680( )	200	1000
	82	8.0	15.0	590	0.112	8000	0.6	3.5	5.0	EEUFS1K820( )	200	1000
	100	8.0	20.0	810	0.096	9000	0.6	3.5	5.0	EEUFS1K101L( )	200	1000
		10.0	12.5	600	0.112	6000	0.6	5.0	5.0	EEUFS1K101( )	200	500
	120	8.0	20.0	810	0.096	9000	0.6	3.5	5.0	EEUFS1K121L( )	200	1000
	150	10.0	16.0	930	0.072	8000	0.6	5.0	5.0	EEUFS1K151( )	200	500
	180	10.0	20.0	1120	0.054	10000	0.6	5.0	5.0	EEUFS1K181( )	200	500
	220	10.0	20.0	1120	0.054	10000	0.6	5.0	5.0	EEUFS1K221( )	200	500
		10.0	25.0	1200	0.044	10000	0.6	5.0	5.0	EEUFS1K221L( )	200	500
	270	10.0	25.0	1200	0.044	10000	0.6	5.0	5.0	EEUFS1K271L( )	200	500
		12.5	20.0	1400	0.043	10000	0.6	5.0	5.0	EEUFS1K271( )	200	500
	390	12.5	25.0	1800	0.034	10000	0.6	5.0	5.0	EEUFS1K391( )	200	500
	470	12.5	30.0	2200	0.030	10000	0.8	5.0	—	EEUFS1K471L( )	100	—
		16.0	20.0	1450	0.032	10000	0.8	7.5	7.5	EEUFS1K471S( )	100	250
	560	12.5	35.0	2380	0.023	10000	0.8	5.0	—	EEUFS1K561L( )	100	—
	680	16.0	25.0	2500	0.025	10000	0.8	7.5	7.5	EEUFS1K681( )	100	250
100	27	8.0	11.5	490	0.160	6000	0.6	3.5	5.0	EEUFS2A270( )	200	1000
	33	8.0	11.5	490	0.160	6000	0.6	3.5	5.0	EEUFS2A330( )	200	1000
	39	8.0	15.0	590	0.112	8000	0.6	3.5	5.0	EEUFS2A390( )	200	1000
	47	8.0	15.0	590	0.112	8000	0.6	3.5	5.0	EEUFS2A470L( )	200	1000
		10.0	12.5	600	0.112	6000	0.6	5.0	5.0	EEUFS2A470( )	200	500
	56	8.0	20.0	810	0.096	9000	0.6	3.5	5.0	EEUFS2A560L( )	200	1000
	68	8.0	20.0	810	0.096	9000	0.6	3.5	5.0	EEUFS2A680L( )	200	1000
		10.0	16.0	930	0.072	8000	0.6	5.0	5.0	EEUFS2A680( )	200	500
	120	10.0	20.0	1120	0.054	10000	0.6	5.0	5.0	EEUFS2A121( )	200	500
		10.0	25.0	1200	0.044	10000	0.6	5.0	5.0	EEUFS2A121L( )	200	500
	150	10.0	25.0	1200	0.044	10000	0.6	5.0	5.0	EEUFS2A151L( )	200	500
		12.5	20.0	1400	0.043	10000	0.6	5.0	5.0	EEUFS2A151( )	200	500
	180	12.5	25.0	1800	0.034	10000	0.6	5.0	5.0	EEUFS2A181( )	200	500
	220	12.5	25.0	1800	0.034	10000	0.6	5.0	5.0	EEUFS2A221( )	200	500
	270	12.5	30.0	2200	0.030	10000	0.8	5.0	—	EEUFS2A271L( )	100	—
		16.0	20.0	1450	0.032	10000	0.8	7.5	7.5	EEUFS2A271S( )	100	250
	330	12.5	35.0	2380	0.023	10000	0.8	5.0	—	EEUFS2A331L( )	100	—
	390	16.0	25.0	2500	0.025	10000	0.8	7.5	7.5	EEUFS2A391( )	100	250

*1: Ripple current (100 kHz / +105 ℃)
*2: Impedance (100 kHz / +20 ℃)
・When requesting taped product, please put the letter "B" be tween the "( )".
Lead wire pitch ✻B=5 mm, 7.5 mm.
・Please refer to the page of “Taping dimensions”.

Panasonic
INDUSTRY

Aluminum Electrolytic Capacitors

Radial Lead Type

FP-A series

Features

- Endurance : 105 ℃ 4000 h to 5000 h
- High ripple current (2 to 2.5 times as high as FC series)
- Large capacitance (Up to 60 % larger than FC series)
- AEC-Q200 compliant
- RoHS compliant

Country of origin

- Malaysia

Specifications

Category temp. range	–55 ℃ to +105 ℃			
Rated voltage range	25 V to 35 V			
Capacitance range	510 µF to 2000 µF			
Capacitance tolerance	±20 % (120 Hz / +20℃)			
Leakage current	I ≦ 0.01 CV (µA) After 2 minutes			
Dissipation factor (tan δ)	Rated voltage (V)	25	35	(120 Hz /+20℃)
	Dissipation factor (tan δ)	0.14	0.12	
	For capacitance value ≧ 1000 µF, add 0.02 per every 1000 µF.			
Endurance	After following life test with DC voltage and +105 ℃±2 ℃ ripple current value applied (The sum of DC and ripple peak voltage shall not exceed the rated working voltage)when the capacitors are restored to 20 ℃, the capacitors shall meet the limits specified bellow. Duration ø10 : 4000 h, ø12.5 : 5000 h			
	Capacitance change	Within ±30 % of the initial value		
	Dissipation factor (tan δ)	≦ 300 % of the initial limit		
	DC leakage current	Within the initial limit		
Shelf life	After storage for 1000 h at +105 ℃±2 ℃ with no voltage applied and then being stabilized at +20 ℃, capacitors shall meet the limits specified in endurance. (With voltage treatment)			

Frequency correction factor for ripple current

Cap. (µF) \ Freq. (Hz)	120	1 k	10 k	100 k to
510 to 1000	0.65	0.75	0.95	1.00
1200 to 2000	0.75	0.80	1.00	1.00

Dimensions

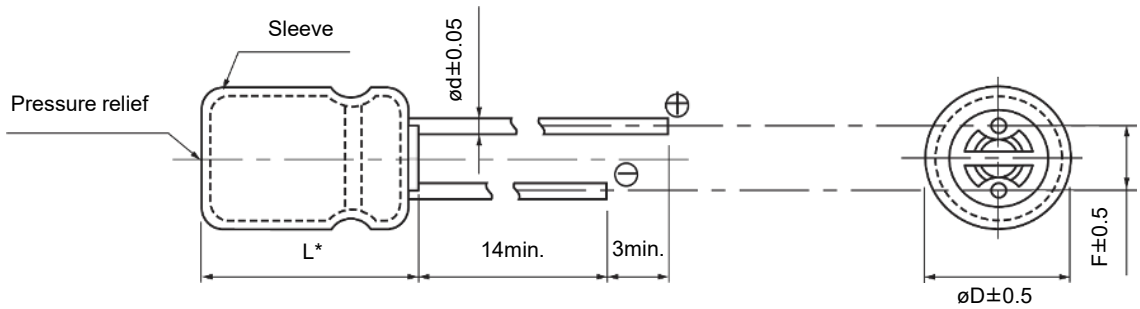

* L ≦ 16 : L±1.5
  L ≧ 20 : L±2.0

Unit : mm

øD	10.0	12.5
L	16 to 20	20 to 25
ød	0.6	0.6
F	5.0	5.0

Design and specifications are each subject to change without notice. Ask factory for the current technical specifications before purchase and/or use.
Should a safety concern arise regarding this product, please be sure to contact us immediately.

Case size / Impedance / Ripple current

R. voltage / Case size (mm) (øD×L)	25 V to 35 V		
	ESR (Ω) (100 kHz)		Ripple current (mA rms) (100 kHz)
	+20 ℃	-10 ℃	+105 ℃
10 × 16	0.068	0.136	2500
10 × 20	0.052	0.104	3000
12.5 × 20	0.038	0.076	3250
12.5 × 25	0.030	0..060	4000

Characteristics list

Rated voltage (V)	Capacitance (±20 %) (μF)	Case size (mm)		Specification			Lead length (mm)			Part No.	Min. Packaging Q'ty (PCS)	
		øD	L	Ripple current*1 (mA rms)	ESR*2 (Ω)	Endu-rance (h)	Lead dia. (ød)	Lead space Straight	Lead space Taping ✻B		Straight leads	Taping
25	680	10.0	16.0	2500	0.068	4000	0.6	5.0	5.0	EEUFP1E681( )	200	500
	1000	10.0	20.0	3000	0.052	4000	0.6	5.0	5.0	EEUFP1E102( )	200	500
	1500	12.5	20.0	3250	0.038	5000	0.6	5.0	5.0	EEUFP1E152( )	200	500
	2000	12.5	25.0	4000	0.030	5000	0.6	5.0	5.0	EEUFP1E202( )	200	500
35	510	10.0	16.0	2500	0.068	4000	0.6	5.0	5.0	EEUFP1V511( )	200	500
	750	10.0	20.0	3000	0.052	4000	0.6	5.0	5.0	EEUFP1V751( )	200	500
	1000	12.5	20.0	3250	0.038	5000	0.6	5.0	5.0	EEUFP1V102( )	200	500
	1300	12.5	25.0	4000	0.030	5000	0.6	5.0	5.0	EEUFP1V132( )	200	500

*1: Ripple current (100 kHz / +105 ℃)
*2: ESR (100 kHz / +20 ℃)
・When requesting taped product, please put the letter "B". Lead wire pitch ✻B=5 mm.
・Please refer to the page of “Taping dimensions”.

Design and specifications are each subject to change without notice. Ask factory for the current technical specifications before purchase and/or use.
Should a safety concern arise regarding this product, please be sure to contact us immediately.

Panasonic INDUSTRY

⚠ Some part numbers are discontinued.

Aluminum Electrolytic Capacitors

Radial Lead Type

ED-A series

✻Propose EE series for New design

■Not available in Japan

Features

- Endurance : 105 ℃ 8000 h to 10000 h
- High ripple current (at high frequency)
- Including low profile products (20 mm height)
- RoHS compliant

Specifications

Category temp. range	–25 ℃ to +105 ℃								
Rated voltage range	160 V to 450 V								
Capacitance range	10 μF to 330 μF								
Capacitance tolerance	±20 % (120 Hz / +20℃)								
Leakage current	I ≦ 0.06 CV +10 (μA) After 2 minutes application of rated working voltage at +20 ℃								
Dissipation factor (tan δ)	Please see the attached characteristics list								
Characteristics at low temperature	Rated voltage (V)	160	200	250	350	400	450	(Impedance ratio at 120 Hz)	
	Z(–25 ℃) / Z(+20 ℃)	3	3	3	6	6	6		
Endurance	After following life test with DC voltage and +105 ℃±2 ℃ ripple current value applied (The sum of DC and ripple peak voltage shall not exceed the rated working voltage) when the capacitors are restored to 20 ℃, the capacitors shall meet the limits specified bellow. Duration ø10 : 8000 h ø12.5 to ø18 : 10000 h								
	Capacitance change	Within ±20 % of the initial value							
	Dissipation factor (tan δ)	≦ 200 % of the initial limit							
	DC leakage current	Within the initial limit							
Shelf life	After storage for 1000 h at +105 ℃±2 ℃ with no voltage applied and then being stabilized at +20 ℃, capacitors shall meet the limits specified in endurance. (With voltage treatment)								

Frequency correction factor for ripple current

Freq. (Hz) / Cap. (μF)	50	120	300	1 k	10 k	100 k to
10 to 82	0.30	0.40	0.55	0.70	0.90	1.00
100 to 330	0.35	0.45	0.60	0.75	0.90	1.00

Dimensions

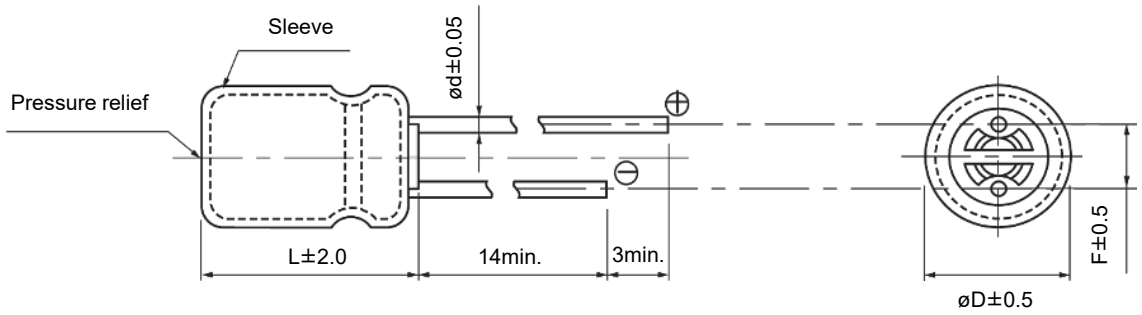

Unit : mm

øD	10.0	12.5	16.0	18.0
ød	0.6	0.6	0.8	0.8
F	5.0	5.0	7.5	7.5

Design and specifications are each subject to change without notice. Ask factory for the current technical specifications before purchase and/or use.
Should a safety concern arise regarding this product, please be sure to contact us immediately.

Characteristics list

Endurance : 105 ℃ 8000 h / ø10, 105 ℃ 10000 h / ø12.5 to ø18

Rated voltage (V)	Capacitance (±20 %) (μF)	Case size (mm)		Specification			Lead length (mm)			Part No.	Min. Packaging Q'ty (PCS)	
		øD	L	Ripple current*1 (mA rms)	tan δ*2	Endu-rance (h)	Lead dia. (ød)	Lead space Straight	Lead space Taping ✻B		Straight leads	Taping
160	22	10.0	20.0	500	0.15	8000	0.6	5.0	5.0	EEUED2C220( )	200	500
	33	10.0	20.0	580	0.15	8000	0.6	5.0	5.0	EEUED2C330( )	200	500
	47	10.0	20.0	750	0.15	8000	0.6	5.0	5.0	EEUED2C470( )	200	500
	68	12.5	20.0	950	0.15	10000	0.6	5.0	5.0	EEUED2C680( )	200	500
	82	12.5	25.0	1060	0.15	10000	0.6	5.0	5.0	EEUED2C820( )	200	500
	100	12.5	25.0	1170	0.15	10000	0.6	5.0	5.0	EEUED2C101( )	200	500
		16.0	20.0	1280	0.15	10000	0.8	7.5	7.5	EEUED2C101S( )	100	250
	150	16.0	25.0	1400	0.15	10000	0.8	7.5	7.5	EEUED2C151( )	100	250
		18.0	20.0	1400	0.15	10000	0.8	7.5	7.5	EEUED2C151S( )	100	250
	220	16.0	31.5	1700	0.15	10000	0.8	7.5	—	EEUED2C221	100	—
		18.0	25.0	1500	0.15	10000	0.8	7.5	7.5	EEUED2C221S( )	100	250
EOL	330	18.0	31.5	2000	0.15	10000	0.8	7.5	—	EEUED2C331	50	—
200	22	10.0	20.0	600	0.15	8000	0.6	5.0	5.0	EEUED2D220( )	200	500
	33	10.0	20.0	650	0.15	8000	0.6	5.0	5.0	EEUED2D330( )	200	500
	47	12.5	20.0	790	0.15	10000	0.6	5.0	5.0	EEUED2D470( )	200	500
	68	12.5	25.0	950	0.15	10000	0.6	5.0	5.0	EEUED2D680( )	200	500
		16.0	20.0	1000	0.15	10000	0.8	7.5	7.5	EEUED2D680S( )	100	250
	82	16.0	20.0	1100	0.15	10000	0.8	7.5	7.5	EEUED2D820S( )	100	250
	100	16.0	25.0	1300	0.15	10000	0.8	7.5	7.5	EEUED2D101( )	100	250
		18.0	20.0	1280	0.15	10000	0.8	7.5	7.5	EEUED2D101S( )	100	250
	150	16.0	25.0	1400	0.15	10000	0.8	7.5	7.5	EEUED2D151( )	100	250
EOL	220	18.0	31.5	2000	0.15	10000	0.8	7.5	—	EEUED2D221	50	—
EOL	330	18.0	40.0	2400	0.15	10000	0.8	7.5	—	EEUED2D331	50	—
250	22	10.0	20.0	560	0.15	8000	0.6	5.0	5.0	EEUED2E220( )	200	500
	33	12.5	20.0	710	0.15	10000	0.6	5.0	5.0	EEUED2E330( )	200	500
	47	12.5	25.0	920	0.15	10000	0.6	5.0	5.0	EEUED2E470( )	200	500
		16.0	20.0	990	0.15	10000	0.8	7.5	7.5	EEUED2E470S( )	100	250
	68	16.0	20.0	1000	0.15	10000	0.8	7.5	7.5	EEUED2E680S( )	100	250
	82	16.0	25.0	1200	0.15	10000	0.8	7.5	7.5	EEUED2E820( )	100	250
		18.0	20.0	1200	0.15	10000	0.8	7.5	7.5	EEUED2E820S( )	100	250
	100	16.0	31.5	1500	0.15	10000	0.8	7.5	—	EEUED2E101	100	—
		18.0	25.0	1500	0.15	10000	0.8	7.5	7.5	EEUED2E101S( )	100	250
EOL	150	18.0	31.5	1800	0.15	10000	0.8	7.5	—	EEUED2E151	50	—
EOL	220	18.0	40.0	2100	0.15	10000	0.8	7.5	—	EEUED2E221	50	—
350	10	10.0	20.0	350	0.20	8000	0.6	5.0	5.0	EEUED2V100( )	200	500
	22	12.5	20.0	480	0.20	10000	0.6	5.0	5.0	EEUED2V220( )	200	500
	33	16.0	20.0	640	0.20	10000	0.8	7.5	7.5	EEUED2V330S( )	100	250
	47	16.0	25.0	800	0.20	10000	0.8	7.5	7.5	EEUED2V470( )	100	250
		18.0	20.0	800	0.20	10000	0.8	7.5	7.5	EEUED2V470S( )	100	250
	68	16.0	31.5	1100	0.20	10000	0.8	7.5	—	EEUED2V680	100	—
		18.0	25.0	1000	0.20	10000	0.8	7.5	7.5	EEUED2V680S( )	100	250
	82	18.0	25.0	1100	0.20	10000	0.8	7.5	7.5	EEUED2V820S( )	100	250
EOL	100	18.0	31.5	1200	0.20	10000	0.8	7.5	—	EEUED2V101	50	—

*1: Ripple current (100 kHz / +105 ℃)
*2: tan δ (120 Hz / +20 ℃)
・When requesting taped product, please put the letter "B". Lead wire pitch ✻B=5 mm, 7.5 mm.
・Please refer to the page of “Taping dimensions”.

EOL End of life

Characteristics list

Endurance : 105 ℃ 8000 h / ø10, 105 ℃ 10000 h / ø12.5 to ø18

Rated voltage (V)	Capacitance (±20 %) (μF)	Case size (mm)		Specification			Lead length (mm)			Part No.	Min. Packaging Q'ty (PCS)	
								Lead space				
		øD	L	Ripple current*1 (mA rms)	tan δ*2	Endu-rance (h)	Lead dia. (ød)	Straight	Taping ✻B		Straight leads	Taping
400	10	10.0	20.0	300	0.24	8000	0.6	5.0	5.0	EEUED2G100( )	200	500
	15	12.5	20.0	410	0.24	10000	0.6	5.0	5.0	EEUED2G150( )	200	500
	22	12.5	25.0	500	0.24	10000	0.6	5.0	5.0	EEUED2G220( )	200	500
		16.0	20.0	600	0.24	10000	0.8	7.5	7.5	EEUED2G220S( )	100	250
	33	16.0	20.0	730	0.24	10000	0.8	7.5	7.5	EEUED2G330S( )	100	250
	47	16.0	25.0	840	0.24	10000	0.8	7.5	7.5	EEUED2G470( )	100	250
		18.0	20.0	840	0.24	10000	0.8	7.5	7.5	EEUED2G470S( )	100	250
	EOL 68	18.0	31.5	1200	0.24	10000	0.8	7.5	—	EEUED2G680	50	—
	EOL 82	18.0	40.0	1500	0.24	10000	0.8	7.5	—	EEUED2G820	50	—
450	10	12.5	20.0	350	0.24	10000	0.6	5.0	5.0	EEUED2W100( )	200	500
	15	12.5	25.0	560	0.24	10000	0.6	5.0	5.0	EEUED2W150( )	200	500
	22	16.0	20.0	680	0.24	10000	0.8	7.5	7.5	EEUED2W220S( )	100	250
	33	16.0	31.5	850	0.24	10000	0.8	7.5	—	EEUED2W330	100	—
		18.0	25.0	850	0.24	10000	0.8	7.5	7.5	EEUED2W330S( )	100	250
	EOL 47	18.0	31.5	1000	0.24	10000	0.8	7.5	—	EEUED2W470	50	—
	EOL 68	18.0	40.0	1300	0.24	10000	0.8	7.5	—	EEUED2W680	50	—

*1: Ripple current (100 kHz / +105 ℃)
*2: tan δ (120 Hz / +20 ℃)
・When requesting taped product, please put the letter "B". Lead wire pitch ✻B=5 mm, 7.5 mm.
・Please refer to the page of “Taping dimensions”.

EOL End of life

Panasonic
INDUSTRY

Aluminum Electrolytic Capacitors

Radial Lead Type

GA-A series

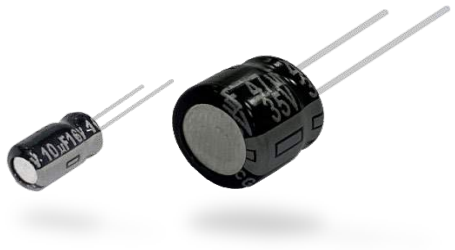

Features

- Endurance : 105 ℃ 1000 h
- RoHS compliant

Specifications

Category temp. range	–55 ℃ to +105 ℃	
Rated voltage range	10 V to 50 V	
Capacitance range	1.5 μF to 220 μF	
Capacitance tolerance	±20 % (120 Hz / +20℃)	
Leakage current	I ≦ 0.01 CV or 3 (μA) After 2 minutes (Whichever is greater)	
Dissipation factor (tan δ)	Please see the attached characteristics list	
Endurance	After following life test with DC voltage and +105 ℃±2 ℃ ripple current value applied (The sum of DC and ripple peak voltage shall not exceed the rated working voltage), for 1000 hours, when the capacitors are restored to 20 ℃, the capacitors shall meet the limits specified bellow.	
	Capacitance change	Within ±20 % of the initial value
	Dissipation factor (tan δ)	≦ 200 % of the initial limit
	DC leakage current	Within the initial limit
Shelf life	After storage for 1000 h at +105 ℃±2 ℃ with no voltage applied and then being stabilized at +20 ℃, capacitors shall meet the limits specified in endurance. (With voltage treatment)	

Frequency correction factor for ripple current

Freq. (Hz) / Cap. (μF)	60	120	1 k	10 k	100 k to
1.5 to 220	0.85	1.00	1.30	1.40	1.55

Dimensions

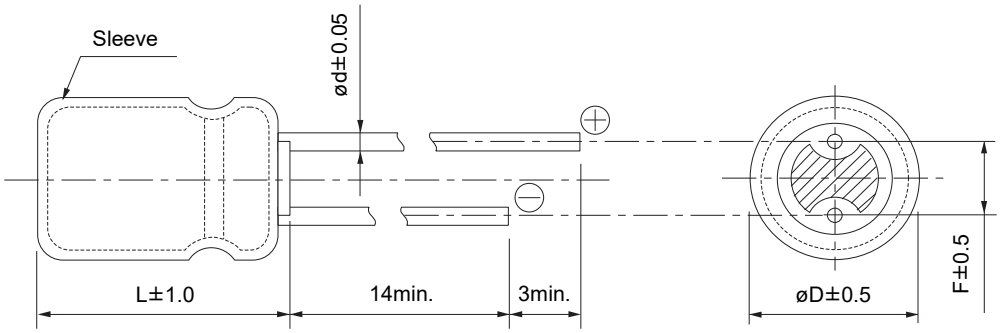

Unit : mm

øD	4.0	5.0	6.3	8.0
ød	0.45	0.45	0.45	0.45
F	1.5	2.0	2.5	2.5

Design and specifications are each subject to change without notice. Ask factory for the current technical specifications before purchase and/or use.
Should a safety concern arise regarding this product, please be sure to contact us immediately.

Characteristics list

Endurance : 105 ℃ 1000 h

Rated voltage (V)	Capacitance (±20 %) (μF)	Case size (mm)		Specification			Lead length (mm)				Part No.	Min. Packaging Q'ty (PCS)	
								Lead space					
		øD	L	Ripple current*1 (mA rms)	tan δ*2	Endu-rance (h)	Lead dia. (ød)	Straight	Taping ✻B	Taping ✻H		Straight leads	Taping
10	22	4.0	7.0	30	0.22	1000	0.45	1.5	5.0	2.5	EEAGA1A220( )	200	2000
	33	5.0	7.0	50	0.22	1000	0.45	2.0	5.0	2.5	EEAGA1A330( )	200	2000
	47	6.3	7.0	65	0.22	1000	0.45	2.5	5.0	2.5	EEAGA1A470( )	200	2000
	68	6.3	7.0	75	0.22	1000	0.45	2.5	5.0	2.5	EEAGA1A680( )	200	2000
	100	6.3	7.0	110	0.22	1000	0.45	2.5	5.0	2.5	EEAGA1A101( )	200	2000
	220	8.0	7.0	160	0.22	1000	0.45	2.5	5.0	2.5	EEAGA1A221( )	200	1000
16	10	4.0	7.0	30	0.18	1000	0.45	1.5	5.0	2.5	EEAGA1C100( )	200	2000
	15	4.0	7.0	33	0.18	1000	0.45	1.5	5.0	2.5	EEAGA1C150( )	200	2000
	22	5.0	7.0	50	0.18	1000	0.45	2.0	5.0	2.5	EEAGA1C220( )	200	2000
	33	6.3	7.0	65	0.18	1000	0.45	2.5	5.0	2.5	EEAGA1C330( )	200	2000
	47	6.3	7.0	77	0.18	1000	0.45	2.5	5.0	2.5	EEAGA1C470( )	200	2000
	100	8.0	7.0	120	0.18	1000	0.45	2.5	5.0	2.5	EEAGA1C101( )	200	1000
25	10	4.0	7.0	33	0.16	1000	0.45	1.5	5.0	2.5	EEAGA1E100( )	200	2000
	15	5.0	7.0	45	0.16	1000	0.45	2.0	5.0	2.5	EEAGA1E150( )	200	2000
	22	5.0	7.0	50	0.16	1000	0.45	2.0	5.0	2.5	EEAGA1E220( )	200	2000
	33	6.3	7.0	75	0.16	1000	0.45	2.5	5.0	2.5	EEAGA1E330( )	200	2000
	68	8.0	7.0	100	0.16	1000	0.45	2.5	5.0	2.5	EEAGA1E680( )	200	1000
35	6.8	4.0	7.0	33	0.13	1000	0.45	1.5	5.0	2.5	EEAGA1V6R8( )	200	2000
	10	5.0	7.0	35	0.13	1000	0.45	2.0	5.0	2.5	EEAGA1V100( )	200	2000
	15	6.3	7.0	50	0.13	1000	0.45	2.5	5.0	2.5	EEAGA1V150( )	200	2000
	22	6.3	7.0	70	0.13	1000	0.45	2.5	5.0	2.5	EEAGA1V220( )	200	2000
	47	8.0	7.0	96	0.13	1000	0.45	2.5	5.0	2.5	EEAGA1V470( )	200	1000
50	1.5	4.0	7.0	16	0.10	1000	0.45	1.5	5.0	2.5	EEAGA1H1R5( )	200	2000
	2.2	4.0	7.0	18	0.10	1000	0.45	1.5	5.0	2.5	EEAGA1H2R2( )	200	2000
	3.3	4.0	7.0	22	0.10	1000	0.45	1.5	5.0	2.5	EEAGA1H3R3( )	200	2000
	4.7	4.0	7.0	26	0.10	1000	0.45	1.5	5.0	2.5	EEAGA1H4R7( )	200	2000
	6.8	5.0	7.0	35	0.10	1000	0.45	2.0	5.0	2.5	EEAGA1H6R8( )	200	2000
	10	6.3	7.0	39	0.10	1000	0.45	2.5	5.0	2.5	EEAGA1H100( )	200	2000
	15	6.3	7.0	55	0.10	1000	0.45	2.5	5.0	2.5	EEAGA1H150( )	200	2000
	22	8.0	7.0	70	0.10	1000	0.45	2.5	5.0	2.5	EEAGA1H220( )	200	1000
	33	8.0	7.0	91	0.10	1000	0.45	2.5	5.0	2.5	EEAGA1H330( )	200	1000

*1: Ripple current (120 Hz / +105 ℃)
*2: tan δ (120 Hz / +20 ℃)
・When requesting taped product, please put the letter "B" or "H" between the "( )".
Lead wire pitch ✻B=5 mm, H=2.5 mm. Suffix "BQ" for ø8×7, 5 mm pitch products
・Please refer to the page of “Taping dimensions”.

Design and specifications are each subject to change without notice. Ask factory for the current technical specifications before purchase and/or use.
Should a safety concern arise regarding this product, please be sure to contact us immediately.

Panasonic
INDUSTRY

Aluminum Electrolytic Capacitors

Radial Lead Type

KA-A series

Low Profile

KA
7 mm hegiht
↑
M

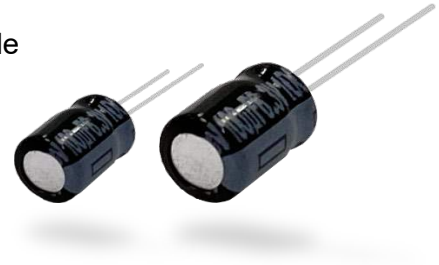

Features

- Endurance : 85 ℃ 1000 h
- 7 mm height
- RoHS compliant

Specifications

Category temp. range	−40 ℃ to +85 ℃	
Rated voltage range	4 V to 50 V	
Capacitance range	2.2 μF to 470 μF	
Capacitance tolerance	±20 % (120 Hz / +20℃)	
Leakage current	I ≦ 0.01 CV or 3 (μA) After 2 minutes (Whichever is greater)	
Dissipation factor (tan δ)	Please see the attached characteristics list	
Endurance	After applying rated working voltage for 1000 h at +85 ℃±2 ℃ when the capacitors are restored to 20 ℃, capacitors shall meet the following limits.	
	Capacitance change	Within ±20 % of the initial value
	Dissipation factor (tan δ)	≦ 200 % of the initial limit
	DC leakage current	Within the initial limit
Shelf life	After storage for 1000 h at +85 ℃±2 ℃ with no voltage applied and then being stabilized at +20 ℃, capacitors shall meet the limits specified in endurance. (With voltage treatment)	

Frequency correction factor for ripple current

Freq. (Hz) / Cap. (μF)	50, 60	120	1 k	10 k to
2.2 to 470	0.70	1.00	1.30	1.70

Dimensions

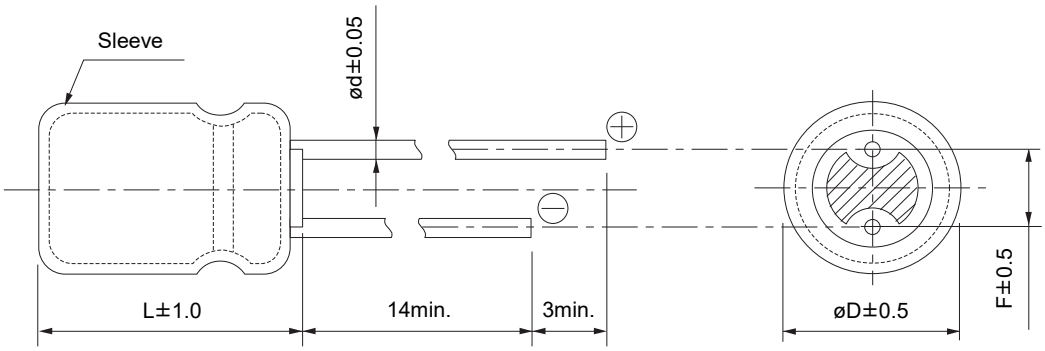

Unit : mm

øD	4.0	5.0	6.3	8.0
ød	0.45	0.45	0.45	0.45
F	1.5	2.0	2.5	2.5

Design and specifications are each subject to change without notice. Ask factory for the current technical specifications before purchase and/or use.
Should a safety concern arise regarding this product, please be sure to contact us immediately.

Characteristics list

Endurance : 85 ℃ 1000 h

Rated voltage (V)	Capacitance (±20 %) (μF)	Case size (mm)		Specification		Lead length (mm)				Part No.	Min. Packaging Q'ty (PCS)	
							Lead space					
		øD	L	Ripple current*1 (mA rms)	tan δ*2	Lead dia. (ød)	Straight	Taping ✻B	Taping ✻i		Straight leads	Taping
4	47	4.0	7.0	34	0.35	0.45	1.5	5.0	2.5	ECEA0GKA470( )	200	2000
	100	5.0	7.0	61	0.35	0.45	2.0	5.0	2.5	ECEA0GKA101( )	200	2000
	220	6.3	7.0	82	0.35	0.45	2.5	5.0	2.5	ECEA0GKA221( )	200	2000
	330	8.0	7.0	110	0.35	0.45	2.5	—	2.5	ECEA0GKA331( )	200	1000
		8.0	7.0	110	0.35	0.45	—	5.0	—	ECEA0GKA331Q	—	1000
	470	8.0	7.0	140	0.35	0.45	2.5	—	2.5	ECEA0GKA471( )	200	1000
		8.0	7.0	140	0.35	0.45	—	5.0	—	ECEA0GKA471Q	—	1000
6.3	47	4.0	7.0	46	0.24	0.45	1.5	5.0	2.5	ECEA0JKA470( )	200	2000
	100	5.0	7.0	71	0.24	0.45	2.0	5.0	2.5	ECEA0JKA101( )	200	2000
	220	6.3	7.0	103	0.24	0.45	2.5	5.0	2.5	ECEA0JKA221( )	200	2000
	330	8.0	7.0	130	0.24	0.45	2.5	—	2.5	ECEA0JKA331( )	200	1000
		8.0	7.0	130	0.24	0.45	—	5.0	—	ECEA0JKA331Q	—	1000
10	33	4.0	7.0	43	0.20	0.45	1.5	5.0	2.5	ECEA1AKA330( )	200	2000
	100	6.3	7.0	80	0.20	0.45	2.5	5.0	2.5	ECEA1AKA101( )	200	2000
	220	8.0	7.0	120	0.20	0.45	2.5	—	2.5	ECEA1AKA221( )	200	1000
		8.0	7.0	120	0.20	0.45	—	5.0	—	ECEA1AKA221Q	—	1000
16	10	4.0	7.0	28	0.16	0.45	1.5	5.0	2.5	ECEA1CKA100( )	200	2000
	22	4.0	7.0	39	0.16	0.45	1.5	5.0	2.5	ECEA1CKA220( )	200	2000
	33	5.0	7.0	60	0.16	0.45	2.0	5.0	2.5	ECEA1CKA330( )	200	2000
	47	5.0	7.0	70	0.16	0.45	2.0	5.0	2.5	ECEA1CKA470( )	200	2000
	100	6.3	7.0	91	0.16	0.45	2.5	5.0	2.5	ECEA1CKA101( )	200	2000
25	10	4.0	7.0	28	0.14	0.45	1.5	5.0	2.5	ECEA1EKA100( )	200	2000
	22	5.0	7.0	55	0.14	0.45	2.0	5.0	2.5	ECEA1EKA220( )	200	2000
	33	6.3	7.0	65	0.14	0.45	2.5	5.0	2.5	ECEA1EKA330( )	200	2000
	47	6.3	7.0	70	0.14	0.45	2.5	5.0	2.5	ECEA1EKA470( )	200	2000
35	10	5.0	7.0	30	0.12	0.45	2.0	5.0	2.5	ECEA1VKA100( )	200	2000
	22	6.3	7.0	60	0.12	0.45	2.5	5.0	2.5	ECEA1VKA220( )	200	2000
	33	6.3	7.0	65	0.12	0.45	2.5	5.0	2.5	ECEA1VKA330( )	200	2000
	47	8.0	7.0	85	0.12	0.45	2.5	—	2.5	ECEA1VKA470( )	200	1000
		8.0	7.0	85	0.12	0.45	—	5.0	—	ECEA1VKA470Q	—	1000
50	2.2	4.0	7.0	16	0.10	0.45	1.5	5.0	2.5	ECEA1HKA2R2( )	200	2000
	3.3	4.0	7.0	18	0.10	0.45	1.5	5.0	2.5	ECEA1HKA3R3( )	200	2000
	4.7	4.0	7.0	23	0.10	0.45	1.5	5.0	2.5	ECEA1HKA4R7( )	200	2000
	10	5.0	7.0	35	0.10	0.45	2.0	5.0	2.5	ECEA1HKA100( )	200	2000
	22	6.3	7.0	60	0.10	0.45	2.5	5.0	2.5	ECEA1HKA220( )	200	2000
	33	8.0	7.0	75	0.10	0.45	2.5	—	2.5	ECEA1HKA330( )	200	1000
		8.0	7.0	75	0.10	0.45	—	5.0	—	ECEA1HKA330Q	—	1000

*1: Ripple current (120 Hz / +85 ℃)
*2: tan δ (120 Hz / +20 ℃)
・When requesting taped product, please put the letter "B" or "i" between the "( )".
Lead wire pitch ✻B=5 mm, i=2.5 mm.
・Please refer to the page of “Taping dimensions”.

Design and specifications are each subject to change without notice. Ask factory for the current technical specifications before purchase and/or use.
Should a safety concern arise regarding this product, please be sure to contact us immediately.

Panasonic
INDUSTRY

Aluminum Electrolytic Capacitors

Radial Lead Type

KA-A (Bi-polar) series

Features

- Endurance : 85 ℃ 1000 h
- 7 mm height
- RoHS compliant

Specifications

Category temp. range	–40 ℃ to +85 ℃	
Rated voltage range	4 V to 50 V	
Capacitance range	2.2 μF to 100 μF	
Capacitance tolerance	±20 % (120 Hz / +20℃)	
Leakage current	I ≦ 0.05 CV or 10 (μA) After 2 minutes (Whichever is greater)	
Dissipation factor (tan δ)	Please see the attached characteristics list	
Endurance	After 1000 h application of DC working voltage (500 h for each polarity) at +85 ℃±2 ℃, when the capacitors are restored to 20 ℃, the capacitors shall meet the following limits.	
	Capacitance change	Within ±20 % of the initial value
	Dissipation factor (tan δ)	≦ 200 % of the initial limit
	DC leakage current	Within the initial limit
Shelf life	After storage for 1000 h at +85 ℃±2 ℃ with no voltage applied and then being stabilized at +20 ℃, capacitors shall meet the limits specified in endurance. (With voltage treatment)	

Frequency correction factor for ripple current

Freq. (Hz) / Cap. (μF)	50, 60	120	1 k	10 k to
2.2 to 100	0.70	1.00	1.30	1.70

Dimensions

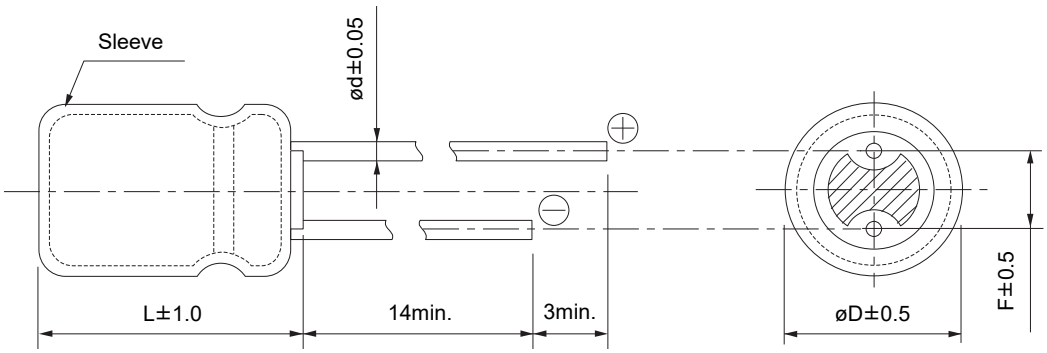

Unit : mm

øD	4.0	5.0	6.3
ød	0.45	0.45	0.45
F	1.5	2.0	2.5

Design and specifications are each subject to change without notice. Ask factory for the current technical specifications before purchase and/or use.
Should a safety concern arise regarding this product, please be sure to contact us immediately.

Characteristics list

Endurance : 85 ℃ 1000 h (500 h for each polarity)

Rated voltage (V)	Capacitance (±20 %) (μF)	Case size (mm)		Specification		Lead length (mm)				Part No.	Min. Packaging Q'ty (PCS)	
							Lead space					
		øD	L	Ripple current*1 (mA rms)	tan δ*2	Lead dia. (ød)	Straight	Taping ✻B	Taping ✻i		Strai-ght leads	Taping
4	100	6.3	7.0	61	0.35	0.45	2.5	5.0	2.5	ECEA0GKN101( )	200	2000
6.3	22	5.0	7.0	29	0.24	0.45	2.0	5.0	2.5	ECEA0JKN220( )	200	2000
	33	5.0	7.0	38	0.24	0.45	2.0	5.0	2.5	ECEA0JKN330( )	200	2000
	47	6.3	7.0	46	0.24	0.45	2.5	5.0	2.5	ECEA0JKN470( )	200	2000
10	10	4.0	7.0	25	0.20	0.45	1.5	5.0	2.5	ECEA1AKN100( )	200	2000
	22	5.0	7.0	35	0.20	0.45	2.0	5.0	2.5	ECEA1AKN220( )	200	2000
	33	6.3	7.0	43	0.20	0.45	2.5	5.0	2.5	ECEA1AKN330( )	200	2000
	47	6.3	7.0	65	0.20	0.45	2.5	5.0	2.5	ECEA1AKN470( )	200	2000
16	4.7	4.0	7.0	20	0.16	0.45	1.5	5.0	2.5	ECEA1CKN4R7( )	200	2000
	10	5.0	7.0	25	0.16	0.45	2.0	5.0	2.5	ECEA1CKN100( )	200	2000
	22	6.3	7.0	39	0.16	0.45	2.5	5.0	2.5	ECEA1CKN220( )	200	2000
	33	6.3	7.0	60	0.16	0.45	2.5	5.0	2.5	ECEA1CKN330( )	200	2000
25	3.3	4.0	7.0	16	0.16	0.45	1.5	5.0	2.5	ECEA1EKN3R3( )	200	2000
	4.7	5.0	7.0	21	0.16	0.45	2.0	5.0	2.5	ECEA1EKN4R7( )	200	2000
	10	6.3	7.0	28	0.16	0.45	2.5	5.0	2.5	ECEA1EKN100( )	200	2000
	22	6.3	7.0	55	0.16	0.45	2.5	5.0	2.5	ECEA1EKN220( )	200	2000
35	2.2	4.0	7.0	12	0.14	0.45	1.5	5.0	2.5	ECEA1VKN2R2( )	200	2000
	3.3	5.0	7.0	16	0.14	0.45	2.0	5.0	2.5	ECEA1VKN3R3( )	200	2000
	4.7	5.0	7.0	22	0.14	0.45	2.0	5.0	2.5	ECEA1VKN4R7( )	200	2000
	10	6.3	7.0	30	0.14	0.45	2.5	5.0	2.5	ECEA1VKN100( )	200	2000
50	2.2	5.0	7.0	16	0.12	0.45	2.0	5.0	2.5	ECEA1HKN2R2( )	200	2000
	3.3	5.0	7.0	16	0.12	0.45	2.0	5.0	2.5	ECEA1HKN3R3( )	200	2000
	4.7	6.3	7.0	23	0.12	0.45	2.5	5.0	2.5	ECEA1HKN4R7( )	200	2000

*1: Ripple current (120 Hz / +85 ℃)
*2: tan δ (120 Hz / +20 ℃)
・When requesting taped product, please put the letter "B" or "i" between the "( )".
Lead wire pitch ✻B=5 mm, i=2.5 mm.
・Please refer to the page of “Taping dimensions”.

Panasonic
INDUSTRY

Aluminum Electrolytic Capacitors

Radial Lead Type

KS-A series

Low Profile

KS — 5 mm hegiht
↑
KA — 7 mm hegiht
↑
M

Features

- Endurance : 85 ℃ 1000 h
- 5 mm height
- RoHS compliant

Specifications

Category temp. range	–40 ℃ to +85 ℃	
Rated voltage range	4 V to 50 V	
Capacitance range	2.2 μF to 330 μF	
Capacitance tolerance	±20 % (120 Hz / +20℃)	
Leakage current	I ≦ 0.01 CV or 3 (μA) After 2 minutes (Whichever is greater)	
Dissipation factor (tan δ)	Please see the attached characteristics list	
Endurance	After applying rated working voltage for 1000 h at +85 ℃±2 ℃ when the capacitors are restored to 20 ℃, capacitors shall meet the following limits.	
	Capacitance change	Within ±20 % of the initial value (4 V : ±30 %)
	Dissipation factor (tan δ)	≦ 200 % of the initial limit
	DC leakage current	Within the initial limit
Shelf life	After storage for 1000 h at +85 ℃±2 ℃ with no voltage applied and then being stabilized at +20 ℃, capacitors shall meet the limits specified in endurance. (With voltage treatment)	

Frequency correction factor for ripple current

Freq. (Hz) / Cap. (μF)	50, 60	120	1 k	10 k to
2.2 to 330	0.70	1.00	1.30	1.70

Dimensions

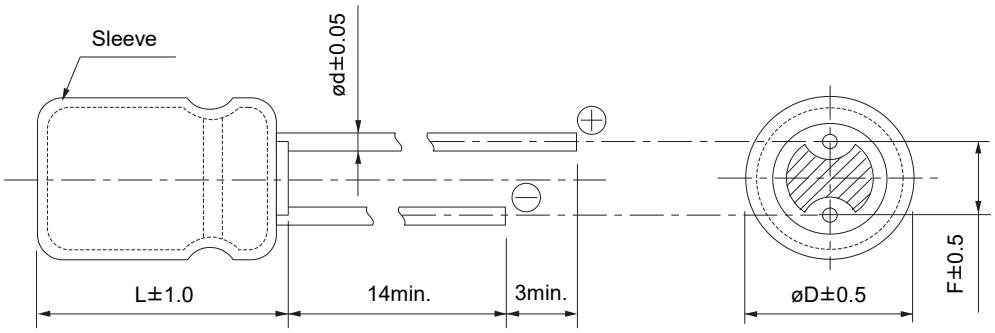

Unit : mm

øD	4.0	5.0	6.3	8.0
ød	0.45	0.45	0.45	0.45
F	1.5	2.0	2.5	2.5

Design and specifications are each subject to change without notice. Ask factory for the current technical specifications before purchase and/or use.
Should a safety concern arise regarding this product, please be sure to contact us immediately.

Characteristics list

Endurance : 85 ℃ 1000 h

Rated voltage (V)	Capacitance (±20 %) (μF)	Case size (mm)		Specification		Lead length (mm)				Part No.	Min. Packaging Q'ty (PCS)	
							Lead space					
		øD	L	Ripple current*1 (mA rms)	tan δ*2	Lead dia. (ød)	Straight	Taping ✻B	Taping ✻i		Straight leads	Taping
4	33	4.0	5.0	26	0.35	0.45	1.5	5.0	2.5	ECEA0GKS330( )	200	2000
	47	4.0	5.0	34	0.35	0.45	1.5	5.0	2.5	ECEA0GKS470( )	200	2000
	100	5.0	5.0	61	0.35	0.45	2.0	5.0	2.5	ECEA0GKS101( )	200	2000
	220	6.3	5.0	82	0.35	0.45	2.5	5.0	2.5	ECEA0GKS221( )	200	2000
6.3	22	4.0	5.0	29	0.24	0.45	1.5	5.0	2.5	ECEA0JKS220( )	200	2000
	33	5.0	5.0	38	0.24	0.45	2.0	5.0	2.5	ECEA0JKS330( )	200	2000
	47	5.0	5.0	46	0.24	0.45	2.0	5.0	2.5	ECEA0JKS470( )	200	2000
	100	6.3	5.0	71	0.24	0.45	2.5	5.0	2.5	ECEA0JKS101( )	200	2000
	330	8.0	5.0	130	0.24	0.45	2.5	—	2.5	ECEA0JKS331( )	200	1000
		8.0	5.0	130	0.24	0.45	—	5.0	—	ECEA0JKS331Q	—	1000
10	22	5.0	5.0	35	0.20	0.45	2.0	5.0	2.5	ECEA1AKS220( )	200	2000
	33	5.0	5.0	43	0.20	0.45	2.0	5.0	2.5	ECEA1AKS330( )	200	2000
	47	6.3	5.0	65	0.20	0.45	2.5	5.0	2.5	ECEA1AKS470( )	200	2000
	100	6.3	5.0	80	0.20	0.45	2.5	5.0	2.5	ECEA1AKS101( )	200	2000
	220	8.0	5.0	120	0.20	0.45	2.5	—	2.5	ECEA1AKS221( )	200	1000
		8.0	5.0	120	0.20	0.45	—	5.0	—	ECEA1AKS221Q	—	1000
16	10	4.0	5.0	28	0.16	0.45	1.5	5.0	2.5	ECEA1CKS100( )	200	2000
	22	5.0	5.0	39	0.16	0.45	2.0	5.0	2.5	ECEA1CKS220( )	200	2000
	33	6.3	5.0	60	0.16	0.45	2.5	5.0	2.5	ECEA1CKS330( )	200	2000
	47	6.3	5.0	70	0.16	0.45	2.5	5.0	2.5	ECEA1CKS470( )	200	2000
	100	8.0	5.0	91	0.16	0.45	2.5	—	2.5	ECEA1CKS101( )	200	1000
		8.0	5.0	91	0.16	0.45	—	5.0	—	ECEA1CKS101Q	—	1000
25	4.7	4.0	5.0	22	0.14	0.45	1.5	5.0	2.5	ECEA1EKS4R7( )	200	2000
	10	5.0	5.0	28	0.14	0.45	2.0	5.0	2.5	ECEA1EKS100( )	200	2000
	22	6.3	5.0	55	0.14	0.45	2.5	5.0	2.5	ECEA1EKS220( )	200	2000
	33	6.3	5.0	65	0.14	0.45	2.5	5.0	2.5	ECEA1EKS330( )	200	2000
	100	8.0	5.0	85	0.14	0.45	2.5	—	2.5	ECEA1EKS101( )	200	1000
		8.0	5.0	85	0.14	0.45	—	5.0	—	ECEA1EKS101Q	—	1000
35	3.3	4.0	5.0	16	0.12	0.45	1.5	5.0	2.5	ECEA1VKS3R3( )	200	2000
	4.7	4.0	5.0	22	0.12	0.45	1.5	5.0	2.5	ECEA1VKS4R7( )	200	2000
	10	5.0	5.0	30	0.12	0.45	2.0	5.0	2.5	ECEA1VKS100( )	200	2000
	22	6.3	5.0	60	0.12	0.45	2.5	5.0	2.5	ECEA1VKS220( )	200	2000
	33	8.0	5.0	65	0.12	0.45	2.5	—	2.5	ECEA1VKS330( )	200	1000
		8.0	5.0	65	0.12	0.45	—	5.0	—	ECEA1VKS330Q	—	1000
	47	8.0	5.0	85	0.12	0.45	2.5		2.5	ECEA1VKS470( )	200	1000
		8.0	5.0	85	0.12	0.45	—	5.0	—	ECEA1VKS470Q	—	1000
50	2.2	4.0	5.0	16	0.10	0.45	1.5	5.0	2.5	ECEA1HKS2R2( )	200	2000
	3.3	4.0	5.0	16	0.10	0.45	1.5	5.0	2.5	ECEA1HKS3R3( )	200	2000
	4.7	5.0	5.0	23	0.10	0.45	2.0	5.0	2.5	ECEA1HKS4R7( )	200	2000
	10	6.3	5.0	35	0.10	0.45	2.5	5.0	2.5	ECEA1HKS100( )	200	2000
	22	8.0	5.0	60	0.10	0.45	2.5	—	2.5	ECEA1HKS220( )	200	1000
		8.0	5.0	60	0.10	0.45	—	5.0	—	ECEA1HKS220Q	—	1000

*1: Ripple current (120 Hz / +85 ℃)
*2: tan δ (120 Hz / +20 ℃)
・When requesting taped product, please put the letter "B" or "i" between the "( )".
Lead wire pitch ✻B=5 mm, i=2.5 mm.
・Please refer to the page of “Taping dimensions”.

Design and specifications are each subject to change without notice. Ask factory for the current technical specifications before purchase and/or use.
Should a safety concern arise regarding this product, please be sure to contact us immediately.

Panasonic
INDUSTRY

Aluminum Electrolytic Capacitors

Radial Lead Type

KS-A (Bi-polar) series

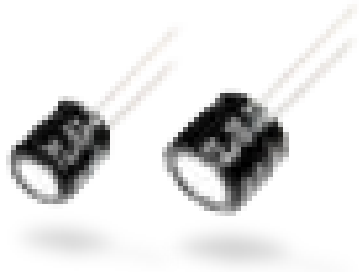

Features

- Endurance : 85 ℃ 1000 h
- 5 mm height
- RoHS compliant

Specifications

Category temp. range	–40 ℃ to +85 ℃	
Rated voltage range	6.3 V to 50 V	
Capacitance range	2.2 μF to 47 μF	
Capacitance tolerance	±20 % (120 Hz / +20℃)	
Leakage current	I ≦ 0.05 CV or 10 (μA) After 2 minutes (Whichever is greater)	
Dissipation factor (tan δ)	Please see the attached characteristics list	
Endurance	After 1000 h application of DC working voltage (500 h for each polarity) at +85 ℃±2 ℃, when the capacitors are restored to 20 ℃, the capacitors shall meet the following limits.	
	Capacitance change	Within ±20 % of the initial value
	Dissipation factor (tan δ)	≦ 200 % of the initial limit
	DC leakage current	Within the initial limit
Shelf life	After storage for 1000 h at +85 ℃±2 ℃ with no voltage applied and then being stabilized at +20 ℃, capacitors shall meet the limits specified in endurance. (With voltage treatment)	

Frequency correction factor for ripple current

Freq. (Hz) / Cap. (μF)	50, 60	120	1 k	10 k to
2.2 to 47	0.70	1.00	1.30	1.70

Dimensions

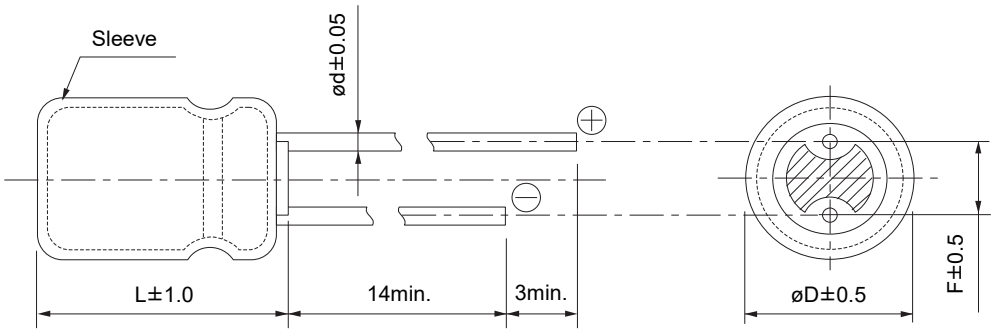

Unit : mm

øD	4	5	6.3
ød	0.45	0.45	0.45
F	1.5	2.0	2.5

Design and specifications are each subject to change without notice. Ask factory for the current technical specifications before purchase and/or use.
Should a safety concern arise regarding this product, please be sure to contact us immediately.

Characteristics list

Endurance : 85 ℃ 1000 h (500 h for each polarity)

Rated voltage (V)	Capacitance (±20 %) (μF)	Case size (mm)		Specification		Lead length (mm)				Part No.	Min. Packaging Q'ty (PCS)	
							Lead space					
		øD	L	Ripple current*1 (mA rms)	tan δ*2	Lead dia. (ød)	Straight	Taping ✻B	Taping ✻i		Strai-ght leads	Taping
6.3	22	5.0	5.0	29	0.24	0.45	2.0	5.0	2.5	ECEA0JSN220( )	200	2000
	33	6.3	5.0	38	0.24	0.45	2.5	5.0	2.5	ECEA0JSN330( )	200	2000
	47	6.3	5.0	46	0.24	0.45	2.5	5.0	2.5	ECEA0JSN470( )	200	2000
10	10	4.0	5.0	25	0.20	0.45	1.5	5.0	2.5	ECEA1ASN100( )	200	2000
	22	6.3	5.0	35	0.20	0.45	2.5	5.0	2.5	ECEA1ASN220( )	200	2000
	33	6.3	5.0	43	0.20	0.45	2.5	5.0	2.5	ECEA1ASN330( )	200	2000
16	4.7	4.0	5.0	20	0.20	0.45	1.5	5.0	2.5	ECEA1CSN4R7( )	200	2000
	10	5.0	5.0	25	0.20	0.45	2.0	5.0	2.5	ECEA1CSN100( )	200	2000
	22	6.3	5.0	39	0.20	0.45	2.5	5.0	2.5	ECEA1CSN220( )	200	2000
25	3.3	5.0	5.0	18	0.20	0.45	2.0	5.0	2.5	ECEA1ESN3R3( )	200	2000
	4.7	5.0	5.0	21	0.20	0.45	2.0	5.0	2.5	ECEA1ESN4R7( )	200	2000
	10	6.3	5.0	28	0.20	0.45	2.5	5.0	2.5	ECEA1ESN100( )	200	2000
35	2.2	4.0	5.0	12	0.20	0.45	1.5	5.0	2.5	ECEA1VSN2R2( )	200	2000
50	2.2	5.0	5.0	16	0.20	0.45	2.0	5.0	2.5	ECEA1HSN2R2( )	200	2000

*1: Ripple current (120 Hz / +85 ℃)
*2: tan δ (120 Hz / +20 ℃)
・When requesting taped product, please put the letter "B" or "i" between the "( )".
Lead wire pitch ✻B=5 mm, i=2.5 mm.
・Please refer to the page of “Taping dimensions”.

Panasonic INDUSTRY

⚠ Some part numbers are discontinued.

Aluminum Electrolytic Capacitors

Radial Lead Type

FC-A series

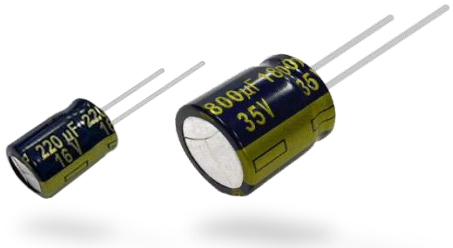

■Not available in Japan

Features

- Endurance : 105 ℃ 1000 h to 5000 h
- Low impedance
- AEC-Q200 compliant
- RoHS compliant

Specifications

Category temp. range	–55 ℃ to +105 ℃										
Rated voltage range	6.3 V to 100 V										
Capacitance range	2.2 μF to 15000 μF										
Capacitance tolerance	±20 % (120 Hz / +20℃)										
Leakage current	I ≦ 0.01 CV or 3 (μA) After 2 minutes (Whichever is greater)										
Dissipation factor (tan δ)	Rated voltage (V)	6.3	10	16	25	35	50	63	100	(120 Hz /+20℃)	
	Dissipation factor (tan δ)	0.22	0.19	0.16	0.14	0.12	0.10	0.08	0.07		
	For capacitance value ≧ 1000 μF, add 0.02 per every 1000 μF.										
Endurance	After following life test with DC voltage and +105 ℃±2 ℃ ripple current value applied (The sum of DC and ripple peak voltage shall not exceed the rated working voltage)when the capacitors are restored to 20 ℃, the capacitors shall meet the limits specified bellow. Duration ø4 to ø6.3 : 1000 h, ø8 : 2000 h, ø10 : 3000 h, ø12.5 to ø18 : 5000 h										
	Capacitance change	Within ±20 % of the initial value									
	Dissipation factor (tan δ)	≦ 200 % of the initial limit									
	DC leakage current	Within the initial limit									
Shelf life	After storage for 1000 h at +105 ℃±2 ℃ with no voltage applied and then being stabilized at +20 °C, capacitors shall meet the limits specified in endurance. (With voltage treatment)										

Frequency correction factor for ripple current

Cap. (μF) \ Freq. (Hz)	60	120	1 k	10 k	100 k
2.2 to 330	0.55	0.65	0.85	0.90	1.00
390 to 1000	0.70	0.75	0.90	0.95	1.00
1200 to 2200	0.75	0.80	0.90	0.95	1.00
2700 to 15000	0.80	0.85	0.95	1.00	1.00

Dimensions

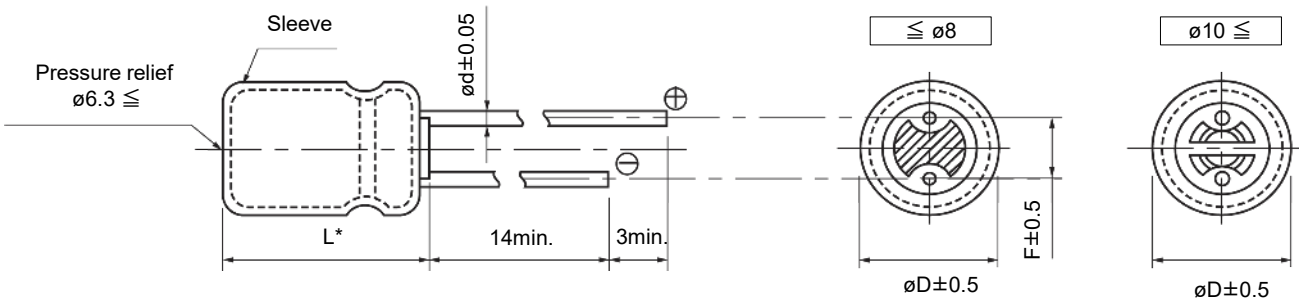

* L ≦ 16 : L±1.0 (ø8x15、ø16x15、ø18x15 : L±1.5)
L ≧ 20 : L±2.0

Unit : mm

	L≧11									L=7		
øD	4.0	5.0	6.3	8.0	10.0	12.5		16.0	18.0	4.0	5.0	6.3
L	—	—	—	—	—	15 to 25	30 to 35	—	—	—	—	—
ød	0.45	0.5	0.5	0.6	0.6	0.6	0.8	0.8	0.8	0.45	0.45	0.45
F	1.5	2.0	2.5	3.5	5.0	5.0	5.0	7.5	7.5	1.5	2.0	2.5

Design and specifications are each subject to change without notice. Ask factory for the current technical specifications before purchase and/or use.
Should a safety concern arise regarding this product, please be sure to contact us immediately.

Case size/ Impedance/ Ripple current

R. voltage / Case size (mm) (øD×L)	6.3 V to 35 V			50 V			63 V			100 V		
	Impedance*1 (Ω)		Ripple current*1 (mA rms)	Impedance*1 (Ω)		Ripple current*1 (mA rms)	Impedance*1 (Ω)		Ripple current*1 (mA rms)	Impedance*1 (Ω)		Ripple current*1 (mA rms)
	+20℃	-10℃		+20℃	-10℃		+20℃	-10℃		+20℃	-10℃	
4 × 7	2.00	5.00	65	—	—	—	—	—	—	—	—	—
5 × 7	0.950	2.40	120	—	—	—	—	—	—	—	—	—
6.3 × 7	0.450	1.20	200	—	—	—	—	—	—	—	—	—
5 × 11	0.800	1.60	175	*2	*2	*2	2.00	4.00	145	4.10	8.20	80
6.3 × 11.2	0.350	0.700	290	0.600	1.20	260	1.00	2.00	240	1.80	3.60	114
8 × 11.5	0.117	0.234	555	0.234	0.468	485	0.342	0.684	405	0.680	1.36	260
8 × 15	0.085	0.170	730	0.155	0.310	635	0.230	0.460	535	0.450	0.900	340
8 × 20	0.065	0.130	995	0.120	0.240	860	0.178	0.356	690	0.330	0.660	455
10 × 12.5	0.090	0.180	755	0.162	0.324	615	0.256	0.512	535	0.530	1.060	306
10 × 16	0.068	0.136	1050	0.119	0.238	850	0.194	0.388	600	0.360	0.720	400
10 × 20	0.052	0.104	1220	0.090	0.180	1030	0.147	0.294	885	0.240	0.480	463
10 × 25	0.045	0.090	1440	0.082	0.164	1200	0.130	0.260	1050	0.210	0.420	599
10 × 30	0.035	0.070	1815	0.060	0.120	1610	0.090	0.180	1300	0.150	0.300	698
12.5 × 15	0.065	0.130	1205	0.110	0.220	1150	0.150	0.300	1020	0.230	0.460	511
12.5 × 20	0.038	0.076	1655	0.063	0.126	1480	0.085	0.170	1285	0.180	0.360	671
12.5 × 25	0.030	0.060	1945	0.050	0.100	1832	0.070	0.140	1720	0.110	0.220	807
12.5 × 30	0.025	0.050	2310	0.040	0.080	2215	0.055	0.110	2090	0.098	0.196	937
12.5 × 35	0.022	0.044	2510	0.034	0.068	2285	0.047	0.094	2265	0.087	0.174	1040
12.5 × 40	0.018	0.036	2655	0.030	0.060	2590	0.042	0.084	2560	0.072	0.144	1130
16 × 15	0.043	0.086	1690	0.080	0.160	1610	0.090	0.180	1410	0.140	0.280	793
16 × 20	0.029	0.058	2205	0.048	0.096	1835	0.059	0.118	1765	0.110	0.220	995
16 × 25	0.022	0.044	2555	0.034	0.068	2235	0.050	0.100	2160	0.089	0.178	1170
16 × 31.5	0.018	0.036	3010	0.028	0.056	2700	0.043	0.086	2670	0.062	0.124	1520
16 × 35.5	0.016	0.032	3150	0.025	0.050	2790	0.036	0.072	2770	0.053	0.106	1730
16 × 40	0.015	0.030	3360	0.023	0.046	2845	0.030	0.060	2825	0.047	0.094	1920
18 × 15	0.038	0.076	2000	0.068	0.136	1900	0.086	0.172	1690	0.120	0.240	917
18 × 20	0.028	0.056	2490	0.042	0.084	2420	0.055	0.110	2290	0.080	0.160	1230
18 × 25	0.020	0.040	2740	0.029	0.058	2610	0.043	0.086	2585	0.070	0.140	1420
18 × 31.5	0.016	0.032	3635	0.025	0.050	3000	0.032	0.064	2950	0.062	0.124	1600
18 × 35.5	0.015	0.030	3680	0.023	0.046	3100	0.030	0.060	3095	0.041	0.082	1770
18 × 40	0.014	0.028	3735	—	—	—	0.025	0.050	3205	0.036	0.072	2300

*1: 100 kHz
*2

Case size (mm) (ø D×L)	Capacitance (μF)	Impedance (Ω) (100 kHz)		Ripple current (mA rms) (100 kHz)
		+20℃	-10℃	
5 × 11	2.2	1.80	3.60	45
	3.3	1.30	2.60	65
	4.7	1.30	2.60	95
	10	1.30	2.60	125
	12	1.30	2.60	135
	15	1.30	2.60	145
	18	1.30	2.60	155
	22	1.30	2.60	155

Characteristics list

Endurance : 105 ℃ 1000 h / ø4 to ø6.3, 105 ℃ 2000 h / ø8, 105 ℃ 3000 h / ø10, 105 ℃ 5000 h / ø12.5 to ø18

Rated voltage (V)	Capacitance (±20 %) (μF)	Case size (mm)		Specification			Lead length (mm)				Part No.	Min. Packaging Q'ty (PCS)	
		øD	L	Ripple current*1 (mA rms)	Impe-dance*2 (Ω)	Endu-rance (h)	Lead dia. (ød)	Lead space: Straight	Lead space: Taping ✻B	Lead space: Taping ✻H		Straight leads	Taping
6.3	27	4.0	7.0	65	2.000	1000	0.45	1.5	5.0	2.5	EEAFC0J270( )	200	2000
	56	5.0	7.0	120	0.950	1000	0.45	2.0	5.0	2.5	EEAFC0J560( )	200	2000
	100	5.0	11.0	175	0.800	1000	0.50	2.0	5.0	2.5	EEUFC0J101( )	200	2000
	120	6.3	7.0	200	0.450	1000	0.45	2.5	5.0	2.5	EEAFC0J121( )	200	2000
	220	6.3	11.2	290	0.350	1000	0.50	2.5	5.0	2.5	EEUFC0J221( )	200	2000
	270	6.3	11.2	290	0.350	1000	0.50	2.5	5.0	2.5	EEUFC0J271( )	200	2000
	330	6.3	11.2	290	0.350	1000	0.50	2.5	5.0	2.5	EEUFC0J331S( )	200	2000
	390	8.0	11.5	555	0.117	2000	0.60	3.5	5.0	—	EEUFC0J391( )	200	1000
	470	8.0	11.5	555	0.117	2000	0.60	3.5	5.0	—	EEUFC0J471( )	200	1000
	560	8.0	11.5	555	0.117	2000	0.60	3.5	5.0	—	EEUFC0J561( )	200	1000
	820	8.0	15.0	730	0.085	2000	0.60	3.5	5.0	—	EEUFC0J821L( )	200	1000
		10.0	12.5	755	0.090	3000	0.60	5.0	5.0	—	EEUFC0J821( )	200	500
	1000	10.0	12.5	755	0.090	3000	0.60	5.0	5.0	—	EEUFC0J102( )	200	500
	1200	8.0	20.0	995	0.065	2000	0.60	3.5	5.0	—	EEUFC0J122L( )	200	1000
		10.0	16.0	1050	0.068	3000	0.60	5.0	5.0	—	EEUFC0J122( )	200	500
	1500	10.0	20.0	1220	0.052	3000	0.60	5.0	5.0	—	EEUFC0J152( )	200	500
		12.5	15.0	1205	0.065	5000	0.60	5.0	5.0	—	EEUFC0J152S( )	200	500
	1800	10.0	25.0	1440	0.045	3000	0.60	5.0	5.0	—	EEUFC0J182( )	200	500
	2200	10.0	25.0	1440	0.045	3000	0.60	5.0	5.0	—	EEUFC0J222( )	200	500
		16.0	15.0	1690	0.043	5000	0.80	7.5	7.5	—	EEUFC0J222S( )	100	250
	2700	10.0	30.0	1815	0.035	3000	0.60	5.0	—	—	EEUFC0J272L	100	—
		12.5	20.0	1655	0.038	5000	0.60	5.0	5.0	—	EEUFC0J272( )	200	500
		16.0	15.0	1690	0.043	5000	0.80	7.5	7.5	—	EEUFC0J272S( )	100	250
	3300	12.5	20.0	1655	0.038	5000	0.60	5.0	5.0	—	EEUFC0J332( )	200	500
		18.0	15.0	2000	0.038	5000	0.80	7.5	7.5	—	EEUFC0J332S( )	100	250
	3900	12.5	25.0	1945	0.030	5000	0.60	5.0	5.0	—	EEUFC0J392( )	200	500
	4700	12.5	30.0	2310	0.025	5000	0.80	5.0	—	—	EEUFC0J472	100	—
		16.0	20.0	2205	0.029	5000	0.80	7.5	7.5	—	EEUFC0J472S( )	100	250
	5600	12.5	35.0	2510	0.022	5000	0.80	5.0	—	—	EEUFC0J562L	100	—
		16.0	20.0	2205	0.029	5000	0.80	7.5	7.5	—	EEUFC0J562( )	100	250
	EOL 6800	12.5	40.0	2655	0.018	5000	0.80	5.0	—	—	EEUFC0J682L	100	—
	6800	16.0	25.0	2555	0.022	5000	0.80	7.5	7.5	—	EEUFC0J682( )	100	250
		18.0	20.0	2490	0.028	5000	0.80	7.5	7.5	—	EEUFC0J682S( )	100	250
	8200	16.0	31.5	3010	0.018	5000	0.80	7.5	—	—	EEUFC0J822	100	—
	EOL 10000	16.0	35.5	3150	0.016	5000	0.80	7.5	—	—	EEUFC0J103	100	—
	10000	18.0	25.0	2740	0.020	5000	0.80	7.5	7.5	—	EEUFC0J103S( )	100	250
	EOL 12000	16.0	40.0	3360	0.015	5000	0.80	7.5	—	—	EEUFC0J123L	100	—
	12000	18.0	31.5	3635	0.016	5000	0.80	7.5	—	—	EEUFC0J123	50	—
	15000	18.0	35.5	3680	0.015	5000	0.80	7.5	—	—	EEUFC0J153	50	—

*1: Ripple current (100 kHz / +105 ℃)

*2: Impedance (100 kHz / +20 ℃)

EOL End of life

・When requesting taped product, please put the letter "B" or "H" be tween the "( )".
Lead wire pitch ✻B=5 mm, 7.5 mm, H=2.5 mm.

・Please refer to the page of “Taping dimensions”.

Characteristics list

Endurance : 105 ℃ 1000 h / ø4 to ø6.3, 105 ℃ 2000 h / ø8, 105 ℃ 3000 h / ø10, 105 ℃ 5000 h / ø12.5 to ø18

Rated voltage (V)	Capacitance (±20 %) (μF)	Case size (mm)		Specification			Lead length (mm)				Part No.	Min. Packaging Q'ty (PCS)	
		øD	L	Ripple current*1 (mA rms)	Impe-dance*2 (Ω)	Endu-rance (h)	Lead dia. (ød)	Lead space: Straight	Lead space: Taping ✻B	Lead space: Taping ✻H		Straight leads	Taping
10	22	4.0	7.0	65	2.000	1000	0.45	1.5	5.0	2.5	EEAFC1A220( )	200	2000
	39	5.0	7.0	120	0.950	1000	0.45	2.0	5.0	2.5	EEAFC1A390( )	200	2000
	82	5.0	11.0	175	0.800	1000	0.50	2.0	5.0	2.5	EEUFC1A820( )	200	2000
		6.3	7.0	200	0.450	1000	0.45	2.5	5.0	2.5	EEAFC1A820( )	200	2000
	100	5.0	11.0	175	0.800	1000	0.50	2.0	5.0	2.5	EEUFC1A101S( )	200	2000
	150	6.3	11.2	290	0.350	1000	0.50	2.5	5.0	2.5	EEUFC1A151( )	200	2000
	180	6.3	11.2	290	0.350	1000	0.50	2.5	5.0	2.5	EEUFC1A181( )	200	2000
	220	6.3	11.2	290	0.350	1000	0.50	2.5	5.0	2.5	EEUFC1A221S( )	200	2000
	330	8.0	11.5	555	0.117	2000	0.60	3.5	5.0	—	EEUFC1A331( )	200	1000
	390	8.0	11.5	555	0.117	2000	0.60	3.5	5.0	—	EEUFC1A391( )	200	1000
	470	8.0	11.5	555	0.117	2000	0.60	3.5	5.0	—	EEUFC1A471( )	200	1000
	560	10.0	12.5	755	0.090	3000	0.60	5.0	5.0	—	EEUFC1A561( )	200	500
	680	8.0	15.0	730	0.085	2000	0.60	3.5	5.0	—	EEUFC1A681L( )	200	1000
		10.0	12.5	755	0.090	3000	0.60	5.0	5.0	—	EEUFC1A681( )	200	500
	820	10.0	16.0	1050	0.068	3000	0.60	5.0	5.0	—	EEUFC1A821( )	200	500
	1000	8.0	20.0	995	0.065	2000	0.60	3.5	5.0	—	EEUFC1A102L( )	200	1000
		10.0	16.0	1050	0.068	3000	0.60	5.0	5.0	—	EEUFC1A102( )	200	500
	1200	10.0	20.0	1220	0.052	3000	0.60	5.0	5.0	—	EEUFC1A122( )	200	500
		12.5	15.0	1205	0.065	5000	0.60	5.0	5.0	—	EEUFC1A122S( )	200	500
	1500	10.0	25.0	1440	0.045	3000	0.60	5.0	5.0	—	EEUFC1A152( )	200	500
	1800	12.5	20.0	1655	0.038	5000	0.60	5.0	5.0	—	EEUFC1A182( )	200	500
		16.0	15.0	1690	0.043	5000	0.80	7.5	7.5	—	EEUFC1A182S( )	100	250
	2200	10.0	30.0	1815	0.035	3000	0.60	5.0	—	—	EEUFC1A222L	100	—
		12.5	20.0	1655	0.038	5000	0.60	5.0	5.0	—	EEUFC1A222( )	200	500
	2700	12.5	25.0	1945	0.030	5000	0.60	5.0	5.0	—	EEUFC1A272( )	200	500
		18.0	15.0	2000	0.038	5000	0.80	7.5	7.5	—	EEUFC1A272S( )	100	250
	3300	12.5	30.0	2310	0.025	5000	0.80	5.0	—	—	EEUFC1A332	100	—
		16.0	20.0	2205	0.029	5000	0.80	7.5	7.5	—	EEUFC1A332S( )	100	250
	3900	12.5	35.0	2510	0.022	5000	0.80	5.0	—	—	EEUFC1A392L	100	—
		16.0	20.0	2205	0.029	5000	0.80	7.5	7.5	—	EEUFC1A392( )	100	250
	EOL 4700	12.5	40.0	2655	0.018	5000	0.80	5.0	—	—	EEUFC1A472L	100	—
	4700	16.0	25.0	2555	0.022	5000	0.80	7.5	7.5	—	EEUFC1A472( )	100	250
	5600	16.0	25.0	2555	0.022	5000	0.80	7.5	7.5	—	EEUFC1A562( )	100	250
		18.0	20.0	2490	0.028	5000	0.80	7.5	7.5	—	EEUFC1A562S( )	100	250
	6800	16.0	31.5	3010	0.018	5000	0.80	7.5	—	—	EEUFC1A682	100	—
		18.0	25.0	2740	0.020	5000	0.80	7.5	7.5	—	EEUFC1A682S( )	100	250
	EOL 8200	16.0	35.5	3150	0.016	5000	0.80	7.5	—	—	EEUFC1A822L	100	—
	8200	18.0	31.5	3635	0.016	5000	0.80	7.5	—	—	EEUFC1A822	50	—
	10000	18.0	35.5	3680	0.015	5000	0.80	7.5	—	—	EEUFC1A103	50	—
	12000	18.0	40.0	3735	0.014	5000	0.80	7.5	—	—	EEUFC1A123	50	—

*1: Ripple current (100 kHz / +105 ℃)

*2: Impedance (100 kHz / +20 ℃)

EOL End of life

・When requesting taped product, please put the letter "B" or "H" be tween the "( )".
Lead wire pitch ✻B=5 mm, 7.5 mm, H=2.5 mm.

・Please refer to the page of “Taping dimensions”.

Design and specifications are each subject to change without notice. Ask factory for the current technical specifications before purchase and/or use.
Should a safety concern arise regarding this product, please be sure to contact us immediately.

Characteristics list

Endurance : 105 ℃ 1000 h / ø4 to ø6.3, 105 ℃ 2000 h / ø8, 105 ℃ 3000 h / ø10, 105 ℃ 5000 h / ø12.5 to ø18

Rated voltage (V)	Capacitance (±20 %) (μF)	Case size (mm)		Specification			Lead length (mm)				Part No.	Min. Packaging Q'ty (PCS)	
		øD	L	Ripple current*1 (mA rms)	Impe-dance*2 (Ω)	Endu-rance (h)	Lead dia. (ød)	Lead space: Straight	Lead space: Taping ✻B	Lead space: Taping ✻H		Straight leads	Taping
16	15	4.0	7.0	65	2.000	1000	0.45	1.5	5.0	2.5	EEAFC1C150( )	200	2000
	27	5.0	7.0	120	0.950	1000	0.45	2.0	5.0	2.5	EEAFC1C270( )	200	2000
	47	5.0	11.0	175	0.800	1000	0.50	2.0	5.0	2.5	EEUFC1C470( )	200	2000
	56	5.0	11.0	175	0.800	1000	0.50	2.0	5.0	2.5	EEUFC1C560( )	200	2000
		6.3	7.0	200	0.450	1000	0.45	2.5	5.0	2.5	EEAFC1C560( )	200	2000
	68	5.0	11.0	175	0.800	1000	0.50	2.0	5.0	2.5	EEUFC1C680( )	200	2000
	100	6.3	11.2	290	0.350	1000	0.50	2.5	5.0	2.5	EEUFC1C101( )	200	2000
	120	6.3	11.2	290	0.350	1000	0.50	2.5	5.0	2.5	EEUFC1C121( )	200	2000
	220	8.0	11.5	555	0.117	2000	0.60	3.5	5.0	—	EEUFC1C221( )	200	1000
	270	8.0	11.5	555	0.117	2000	0.60	3.5	5.0	—	EEUFC1C271( )	200	1000
	330	8.0	11.5	555	0.117	2000	0.60	3.5	5.0	—	EEUFC1C331( )	200	1000
	390	10.0	12.5	755	0.090	3000	0.60	5.0	5.0	—	EEUFC1C391( )	200	500
	470	8.0	15.0	730	0.085	2000	0.60	3.5	5.0	—	EEUFC1C471L( )	200	1000
		10.0	12.5	755	0.090	3000	0.60	5.0	5.0	—	EEUFC1C471( )	200	500
	560	10.0	16.0	1050	0.068	3000	0.60	5.0	5.0	—	EEUFC1C561( )	200	500
	680	8.0	20.0	995	0.065	2000	0.60	3.5	5.0	—	EEUFC1C681L( )	200	1000
		10.0	16.0	1050	0.068	3000	0.60	5.0	5.0	—	EEUFC1C681( )	200	500
	820	10.0	20.0	1220	0.052	3000	0.60	5.0	5.0	—	EEUFC1C821( )	200	500
		12.5	15.0	1205	0.065	5000	0.60	5.0	5.0	—	EEUFC1C821S( )	200	500
	1000	10.0	20.0	1220	0.052	3000	0.60	5.0	5.0	—	EEUFC1C102S( )	200	500
		10.0	25.0	1440	0.045	3000	0.60	5.0	5.0	—	EEUFC1C102( )	200	500
	1200	10.0	25.0	1440	0.045	3000	0.60	5.0	5.0	—	EEUFC1C122( )	200	500
		16.0	15.0	1690	0.043	5000	0.80	7.5	7.5	—	EEUFC1C122S( )	100	250
	1500	10.0	30.0	1815	0.035	3000	0.60	5.0	—	—	EEUFC1C152L	100	—
		12.5	20.0	1655	0.038	5000	0.60	5.0	5.0	—	EEUFC1C152( )	200	500
		16.0	15.0	1690	0.043	5000	0.80	7.5	7.5	—	EEUFC1C152S( )	100	250
	1800	12.5	25.0	1945	0.030	5000	0.60	5.0	5.0	—	EEUFC1C182( )	200	500
		18.0	15.0	2000	0.038	5000	0.80	7.5	7.5	—	EEUFC1C182S( )	100	250
	2200	12.5	25.0	1945	0.030	5000	0.60	5.0	5.0	—	EEUFC1C222( )	200	500
		16.0	20.0	2205	0.029	5000	0.80	7.5	7.5	—	EEUFC1C222S( )	100	250
	2700	12.5	30.0	2310	0.025	5000	0.80	5.0	—	—	EEUFC1C272L	100	—
		16.0	20.0	2205	0.029	5000	0.80	7.5	7.5	—	EEUFC1C272( )	100	250
	3300	12.5	35.0	2510	0.022	5000	0.80	5.0	—	—	EEUFC1C332	100	—
		18.0	20.0	2490	0.028	5000	0.80	7.5	7.5	—	EEUFC1C332S( )	100	250
	3900	16.0	25.0	2555	0.022	5000	0.80	7.5	7.5	—	EEUFC1C392( )	100	250
		18.0	20.0	2490	0.028	5000	0.80	7.5	7.5	—	EEUFC1C392S( )	100	250
	4700	16.0	31.5	3010	0.018	5000	0.80	7.5	—	—	EEUFC1C472	100	—
		18.0	25.0	2740	0.020	5000	0.80	7.5	7.5	—	EEUFC1C472S( )	100	250
	EOL 5600	16.0	35.5	3150	0.016	5000	0.80	7.5	—	—	EEUFC1C562L	100	—
	5600	18.0	31.5	3635	0.016	5000	0.80	7.5	—	—	EEUFC1C562	50	—
	EOL 6800	16.0	40.0	3360	0.015	5000	0.80	7.5	—	—	EEUFC1C682	100	—
	8200	18.0	35.5	3680	0.015	5000	0.80	7.5	—	—	EEUFC1C822	50	—

*1: Ripple current (100 kHz / +105 ℃)

*2: Impedance (100 kHz / +20 ℃)

EOL End of life

・When requesting taped product, please put the letter "B" or "H" be tween the "( )".
Lead wire pitch ✻B=5 mm, 7.5 mm, H=2.5 mm.

・Please refer to the page of “Taping dimensions”.

Design and specifications are each subject to change without notice. Ask factory for the current technical specifications before purchase and/or use.
Should a safety concern arise regarding this product, please be sure to contact us immediately.

Characteristics list

Endurance : 105 ℃ 1000 h / ø4 to ø6.3, 105 ℃ 2000 h / ø8, 105 ℃ 3000 h / ø10, 105 ℃ 5000 h / ø12.5 to ø18

Rated voltage (V)	Capacitance (±20 %) (μF)	Case size (mm)		Specification			Lead length (mm)				Part No.	Min. Packaging Q'ty (PCS)	
		øD	L	Ripple current*1 (mA rms)	Impe-dance*2 (Ω)	Endu-rance (h)	Lead dia. (ød)	Lead space: Straight	Lead space: Taping ✻B	Lead space: Taping ✻H		Straight leads	Taping
25	10	4.0	7.0	65	2.000	1000	0.45	1.5	5.0	2.5	EEAFC1E100( )	200	2000
	22	5.0	7.0	120	0.950	1000	0.45	2.0	5.0	2.5	EEAFC1E220( )	200	2000
	39	5.0	11.0	175	0.800	1000	0.50	2.0	5.0	2.5	EEUFC1E390( )	200	2000
		6.3	7.0	200	0.450	1000	0.45	2.5	5.0	2.5	EEAFC1E390( )	200	2000
	47	5.0	11.0	175	0.800	1000	0.50	2.0	5.0	2.5	EEUFC1E470( )	200	2000
	82	6.3	11.2	290	0.350	1000	0.50	2.5	5.0	2.5	EEUFC1E820( )	200	2000
	100	6.3	11.2	290	0.350	1000	0.50	2.5	5.0	2.5	EEUFC1E101S( )	200	2000
	180	8.0	11.5	555	0.117	2000	0.60	3.5	5.0	—	EEUFC1E181( )	200	1000
	220	8.0	11.5	555	0.117	2000	0.60	3.5	5.0	—	EEUFC1E221( )	200	1000
	270	10.0	12.5	755	0.090	3000	0.60	5.0	5.0	—	EEUFC1E271( )	200	500
	330	8.0	15.0	730	0.085	2000	0.60	3.5	5.0	—	EEUFC1E331L( )	200	1000
		10.0	12.5	755	0.090	3000	0.60	5.0	5.0	—	EEUFC1E331( )	200	500
	390	10.0	16.0	1050	0.068	3000	0.60	5.0	5.0	—	EEUFC1E391( )	200	500
	470	8.0	20.0	995	0.065	2000	0.60	3.5	5.0	—	EEUFC1E471L( )	200	1000
		10.0	16.0	1050	0.068	3000	0.60	5.0	5.0	—	EEUFC1E471( )	200	500
	560	10.0	20.0	1220	0.052	3000	0.60	5.0	5.0	—	EEUFC1E561( )	200	500
		12.5	15.0	1205	0.065	5000	0.60	5.0	5.0	—	EEUFC1E561S( )	200	500
	680	10.0	20.0	1220	0.052	3000	0.60	5.0	5.0	—	EEUFC1E681( )	200	500
	820	10.0	25.0	1440	0.045	3000	0.60	5.0	5.0	—	EEUFC1E821( )	200	500
		12.5	20.0	1655	0.038	5000	0.60	5.0	5.0	—	EEUFC1E821S( )	200	500
	1000	10.0	30.0	1815	0.035	3000	0.60	5.0	—	—	EEUFC1E102L	100	—
		12.5	20.0	1655	0.038	5000	0.60	5.0	5.0	—	EEUFC1E102( )	200	500
		16.0	15.0	1690	0.043	5000	0.80	7.5	7.5	—	EEUFC1E102S( )	100	250
	1200	12.5	25.0	1945	0.030	5000	0.60	5.0	5.0	—	EEUFC1E122( )	200	500
		18.0	15.0	2000	0.038	5000	0.80	7.5	7.5	—	EEUFC1E122S( )	100	250
	1500	12.5	25.0	1945	0.030	5000	0.60	5.0	5.0	—	EEUFC1E152( )	200	500
		16.0	20.0	2205	0.029	5000	0.80	7.5	7.5	—	EEUFC1E152S( )	100	250
	1800	12.5	30.0	2310	0.025	5000	0.80	5.0	—	—	EEUFC1E182L	100	—
		16.0	20.0	2205	0.029	5000	0.80	7.5	7.5	—	EEUFC1E182( )	100	250
	2200	12.5	35.0	2510	0.022	5000	0.80	5.0	—	—	EEUFC1E222	100	—
		18.0	20.0	2490	0.028	5000	0.80	7.5	7.5	—	EEUFC1E222S( )	100	250
	2700	16.0	25.0	2555	0.022	5000	0.80	7.5	7.5	—	EEUFC1E272( )	100	250
	3300	16.0	31.5	3010	0.018	5000	0.80	7.5	—	—	EEUFC1E332	100	—
		18.0	25.0	2740	0.020	5000	0.80	7.5	7.5	—	EEUFC1E332S( )	100	250
	EOL 3900	16.0	35.5	3150	0.016	5000	0.80	7.5	—	—	EEUFC1E392L	100	—
	3900	18.0	31.5	3635	0.016	5000	0.80	7.5	—	—	EEUFC1E392	50	—
	4700	18.0	35.5	3680	0.015	5000	0.80	7.5	—	—	EEUFC1E472	50	—
	5600	18.0	40.0	3735	0.014	5000	0.80	7.5	—	—	EEUFC1E562	50	—

*1: Ripple current (100 kHz / +105 ℃)

*2: Impedance (100 kHz / +20 ℃)

EOL End of life

・When requesting taped product, please put the letter "B" or "H" be tween the "( )".
Lead wire pitch ✻B=5 mm, 7.5 mm, H=2.5 mm.

・Please refer to the page of “Taping dimensions”.

Characteristics list

Endurance : 105 ℃ 1000 h / ø4 to ø6.3, 105 ℃ 2000 h / ø8, 105 ℃ 3000 h / ø10, 105 ℃ 5000 h / ø12.5 to ø18

Rated voltage (V)	Capacitance (±20 %) (μF)	Case size (mm)		Specification			Lead length (mm)				Part No.	Min. Packaging Q'ty (PCS)	
		øD	L	Ripple current*1 (mA rms)	Impe-dance*2 (Ω)	Endu-rance (h)	Lead dia. (ød)	Lead space: Straight	Lead space: Taping ✻B	Lead space: Taping ✻H		Straight leads	Taping
35	6.8	4.0	7.0	65	2.000	1000	0.45	1.5	5.0	2.5	EEAFC1V6R8( )	200	2000
	12	5.0	7.0	120	0.950	1000	0.45	2.0	5.0	2.5	EEAFC1V120( )	200	2000
	22	5.0	11.0	175	0.800	1000	0.50	2.0	5.0	2.5	EEUFC1V220( )	200	2000
	27	5.0	11.0	175	0.800	1000	0.50	2.0	5.0	2.5	EEUFC1V270( )	200	2000
		6.3	7.0	200	0.450	1000	0.45	2.5	5.0	2.5	EEAFC1V270( )	200	2000
	33	5.0	11.0	175	0.800	1000	0.50	2.0	5.0	2.5	EEUFC1V330( )	200	2000
	47	6.3	11.2	290	0.350	1000	0.50	2.5	5.0	2.5	EEUFC1V470( )	200	2000
	56	6.3	11.2	290	0.350	1000	0.50	2.5	5.0	2.5	EEUFC1V560( )	200	2000
	68	6.3	11.2	290	0.350	1000	0.50	2.5	5.0	2.5	EEUFC1V680( )	200	2000
	100	8.0	11.5	555	0.117	2000	0.60	3.5	5.0	—	EEUFC1V101( )	200	1000
	120	8.0	11.5	555	0.117	2000	0.60	3.5	5.0	—	EEUFC1V121( )	200	1000
	150	8.0	11.5	555	0.117	2000	0.60	3.5	5.0	—	EEUFC1V151( )	200	1000
	180	10.0	12.5	755	0.090	3000	0.60	5.0	5.0	—	EEUFC1V181( )	200	500
	220	8.0	15.0	730	0.085	2000	0.60	3.5	5.0	—	EEUFC1V221L( )	200	1000
		10.0	12.5	755	0.090	3000	0.60	5.0	5.0	—	EEUFC1V221( )	200	500
	270	10.0	16.0	1050	0.068	3000	0.60	5.0	5.0	—	EEUFC1V271( )	200	500
	330	8.0	20.0	995	0.065	2000	0.60	3.5	5.0	—	EEUFC1V331L( )	200	1000
		10.0	16.0	1050	0.068	3000	0.60	5.0	5.0	—	EEUFC1V331( )	200	500
	390	10.0	20.0	1220	0.052	3000	0.60	5.0	5.0	—	EEUFC1V391( )	200	500
		12.5	15.0	1205	0.065	5000	0.60	5.0	5.0	—	EEUFC1V391S( )	200	500
	470	10.0	20.0	1220	0.052	3000	0.60	5.0	5.0	—	EEUFC1V471( )	200	500
	560	10.0	25.0	1440	0.045	3000	0.60	5.0	5.0	—	EEUFC1V561( )	200	500
		12.5	20.0	1655	0.038	5000	0.60	5.0	5.0	—	EEUFC1V561S( )	200	500
	680	10.0	30.0	1815	0.035	3000	0.60	5.0	—	—	EEUFC1V681L	100	—
		12.5	20.0	1655	0.038	5000	0.60	5.0	5.0	—	EEUFC1V681( )	200	500
		16.0	15.0	1690	0.043	5000	0.80	7.5	7.5	—	EEUFC1V681S( )	100	250
	820	12.5	25.0	1945	0.030	5000	0.60	5.0	5.0	—	EEUFC1V821L( )	200	500
		18.0	15.0	2000	0.038	5000	0.80	7.5	7.5	—	EEUFC1V821( )	100	250
	1000	12.5	25.0	1945	0.030	5000	0.60	5.0	5.0	—	EEUFC1V102( )	200	500
		16.0	20.0	2205	0.029	5000	0.80	7.5	7.5	—	EEUFC1V102S( )	100	250
	1200	12.5	30.0	2310	0.025	5000	0.80	5.0	—	—	EEUFC1V122L	100	—
		16.0	20.0	2205	0.029	5000	0.80	7.5	7.5	—	EEUFC1V122( )	100	250
	1500	12.5	35.0	2510	0.022	5000	0.80	5.0	—	—	EEUFC1V152L	100	—
		16.0	25.0	2555	0.022	5000	0.80	7.5	7.5	—	EEUFC1V152( )	100	250
		18.0	20.0	2490	0.028	5000	0.80	7.5	7.5	—	EEUFC1V152S( )	100	250
	EOL 1800	12.5	40.0	2655	0.018	5000	0.80	5.0	—	—	EEUFC1V182L	100	—
	1800	16.0	25.0	2555	0.022	5000	0.80	7.5	7.5	—	EEUFC1V182( )	100	250
		18.0	20.0	2490	0.028	5000	0.80	7.5	7.5	—	EEUFC1V182S( )	100	250
	2200	16.0	31.5	3010	0.018	5000	0.80	7.5	—	—	EEUFC1V222	100	—
		18.0	25.0	2740	0.020	5000	0.80	7.5	7.5	—	EEUFC1V222S( )	100	250
	EOL 2700	16.0	35.5	3150	0.016	5000	0.80	7.5	—	—	EEUFC1V272L	100	—
	2700	18.0	31.5	3635	0.016	5000	0.80	7.5	—	—	EEUFC1V272	50	—
	3300	18.0	35.5	3680	0.015	5000	0.80	7.5	—	—	EEUFC1V332	50	—
	3900	18.0	40.0	3735	0.014	5000	0.80	7.5	—	—	EEUFC1V392	50	—

*1: Ripple current (100 kHz / +105 ℃)

*2: Impedance (100 kHz / +20 ℃)

EOL End of life

・When requesting taped product, please put the letter "B" or "H" be tween the "( )".
Lead wire pitch ✻B=5 mm, 7.5 mm, H=2.5 mm.

・Please refer to the page of “Taping dimensions”.

Design and specifications are each subject to change without notice. Ask factory for the current technical specifications before purchase and/or use.
Should a safety concern arise regarding this product, please be sure to contact us immediately.

Characteristics list

Endurance : 105 ℃ 1000 h / ø4 to ø6.3, 105 ℃ 2000 h / ø8, 105 ℃ 3000 h / ø10, 105 ℃ 5000 h / ø12.5 to ø18

Rated voltage (V)	Capacitance (±20 %) (μF)	Case size (mm)		Specification			Lead length (mm)				Part No.	Min. Packaging Q'ty (PCS)	
		øD	L	Ripple current*1 (mA rms)	Impe-dance*2 (Ω)	Endu-rance (h)	Lead dia. (ød)	Lead space: Straight	Lead space: Taping ✻B	Lead space: Taping ✻H		Straight leads	Taping
50	2.2	5.0	11.0	45	1.800	1000	0.50	2.0	5.0	2.5	EEUFC1H2R2( )	200	2000
	3.3	5.0	11.0	65	1.300	1000	0.50	2.0	5.0	2.5	EEUFC1H3R3( )	200	2000
	4.7	5.0	11.0	95	1.300	1000	0.50	2.0	5.0	2.5	EEUFC1H4R7( )	200	2000
	10	5.0	11.0	125	1.300	1000	0.50	2.0	5.0	2.5	EEUFC1H100L( )	200	2000
	12	5.0	11.0	135	1.300	1000	0.50	2.0	5.0	2.5	EEUFC1H120( )	200	2000
	15	5.0	11.0	145	1.300	1000	0.50	2.0	5.0	2.5	EEUFC1H150( )	200	2000
	18	5.0	11.0	155	1.300	1000	0.50	2.0	5.0	2.5	EEUFC1H180( )	200	2000
	22	5.0	11.0	155	1.300	1000	0.50	2.0	5.0	2.5	EEUFC1H220( )	200	2000
	33	6.3	11.2	260	0.600	1000	0.50	2.5	5.0	2.5	EEUFC1H330( )	200	2000
	39	6.3	11.2	260	0.600	1000	0.50	2.5	5.0	2.5	EEUFC1H390( )	200	2000
	47	6.3	11.2	260	0.600	1000	0.50	2.5	5.0	2.5	EEUFC1H470( )	200	2000
	68	8.0	11.5	485	0.234	2000	0.60	3.5	5.0	—	EEUFC1H680( )	200	1000
	82	8.0	11.5	485	0.234	2000	0.60	3.5	5.0	—	EEUFC1H820( )	200	1000
	100	10.0	12.5	615	0.162	3000	0.60	5.0	5.0	—	EEUFC1H101( )	200	500
	120	8.0	15.0	635	0.155	2000	0.60	3.5	5.0	—	EEUFC1H121L( )	200	1000
		10.0	12.5	615	0.162	3000	0.60	5.0	5.0	—	EEUFC1H121( )	200	500
	150	10.0	16.0	850	0.119	3000	0.60	5.0	5.0	—	EEUFC1H151( )	200	500
	180	8.0	20.0	860	0.120	2000	0.60	3.5	5.0	—	EEUFC1H181L( )	200	1000
		10.0	16.0	850	0.119	3000	0.60	5.0	5.0	—	EEUFC1H181( )	200	500
	220	10.0	20.0	1030	0.090	3000	0.60	5.0	5.0	—	EEUFC1H221( )	200	500
		12.5	15.0	1150	0.110	5000	0.60	5.0	5.0	—	EEUFC1H221S( )	200	500
	270	10.0	25.0	1200	0.082	3000	0.60	5.0	5.0	—	EEUFC1H271( )	200	500
	330	10.0	30.0	1610	0.060	3000	0.60	5.0	—	—	EEUFC1H331L	100	—
		12.5	20.0	1480	0.063	5000	0.60	5.0	5.0	—	EEUFC1H331( )	200	500
	390	12.5	20.0	1480	0.063	5000	0.60	5.0	5.0	—	EEUFC1H391( )	200	500
		16.0	15.0	1610	0.080	5000	0.80	7.5	7.5	—	EEUFC1H391S( )	100	250
	470	10.0	30.0	1610	0.060	3000	0.60	5.0	—	—	EEUFC1H471L	100	—
		12.5	25.0	1832	0.050	5000	0.60	5.0	5.0	—	EEUFC1H471( )	200	500
	560	12.5	25.0	1832	0.050	5000	0.60	5.0	5.0	—	EEUFC1H561( )	200	500
		18.0	15.0	1900	0.068	5000	0.80	7.5	7.5	—	EEUFC1H561S( )	100	250
	680	12.5	30.0	2215	0.040	5000	0.80	5.0	—	—	EEUFC1H681L	100	—
		16.0	20.0	1835	0.048	5000	0.80	7.5	7.5	—	EEUFC1H681( )	100	250
	820	12.5	35.0	2285	0.034	5000	0.80	5.0	—	—	EEUFC1H821L	100	—
		18.0	20.0	2420	0.042	5000	0.80	7.5	7.5	—	EEUFC1H821( )	100	250
	EOL 1000	12.5	40.0	2590	0.030	5000	0.80	5.0	—	—	EEUFC1H102L	100	—
	1000	16.0	25.0	2235	0.034	5000	0.80	7.5	7.5	—	EEUFC1H102( )	100	250
	1200	16.0	31.5	2700	0.028	5000	0.80	7.5	—	—	EEUFC1H122	100	—
		18.0	25.0	2610	0.029	5000	0.80	7.5	7.5	—	EEUFC1H122S( )	100	250
	EOL 1500	16.0	35.5	2790	0.025	5000	0.80	7.5	—	—	EEUFC1H152L	100	—
	EOL 1800	16.0	40.0	2845	0.023	5000	0.80	7.5	—	—	EEUFC1H182L	100	—
	1800	18.0	31.5	3000	0.025	5000	0.80	7.5	—	—	EEUFC1H182	50	—
	2200	18.0	35.5	3100	0.023	5000	0.80	7.5	—	—	EEUFC1H222	50	—

*1: Ripple current (100 kHz / +105 ℃)

*2: Impedance (100 kHz / +20 ℃)

EOL End of life

・When requesting taped product, please put the letter "B" or "H" be tween the "( )".
Lead wire pitch ✻B=5 mm, 7.5 mm, H=2.5 mm.

・Please refer to the page of “Taping dimensions”.

Design and specifications are each subject to change without notice. Ask factory for the current technical specifications before purchase and/or use.
Should a safety concern arise regarding this product, please be sure to contact us immediately.

Characteristics list

Endurance : 105 ℃ 1000 h / ø4 to ø6.3, 105 ℃ 2000 h / ø8, 105 ℃ 3000 h / ø10, 105 ℃ 5000 h / ø12.5 to ø18

Rated voltage (V)	Capacitance (±20 %) (μF)	Case size (mm)		Specification			Lead length (mm)				Part No.	Min. Packaging Q'ty (PCS)	
		øD	L	Ripple current*1 (mA rms)	Impe-dance*2 (Ω)	Endu-rance (h)	Lead dia. (ød)	Lead space: Straight	Lead space: Taping ✻B	Lead space: Taping ✻H		Straight leads	Taping
63	12	5.0	11.0	145	2.000	1000	0.50	2.0	5.0	2.5	EEUFC1J120( )	200	2000
	22	6.3	11.2	240	1.000	1000	0.50	2.5	5.0	2.5	EEUFC1J220( )	200	2000
	33	6.3	11.2	240	1.000	1000	0.50	2.5	5.0	2.5	EEUFC1J330( )	200	2000
	47	8.0	11.5	405	0.342	2000	0.60	3.5	5.0	—	EEUFC1J470( )	200	1000
	56	8.0	11.5	405	0.342	2000	0.60	3.5	5.0	—	EEUFC1J560( )	200	1000
	68	8.0	11.5	405	0.342	2000	0.60	3.5	5.0	—	EEUFC1J680( )	200	1000
	82	10.0	12.5	535	0.256	3000	0.60	5.0	5.0	—	EEUFC1J820( )	200	500
	100	8.0	15.0	535	0.230	2000	0.60	3.5	5.0	—	EEUFC1J101L( )	200	1000
		10.0	12.5	535	0.256	3000	0.60	5.0	5.0	—	EEUFC1J101( )	200	500
	120	10.0	16.0	600	0.194	3000	0.60	5.0	5.0	—	EEUFC1J121( )	200	500
	150	8.0	20.0	690	0.178	2000	0.60	3.5	5.0	—	EEUFC1J151( )	200	1000
	180	10.0	20.0	885	0.147	3000	0.60	5.0	5.0	—	EEUFC1J181( )	200	500
		12.5	15.0	1020	0.150	5000	0.60	5.0	5.0	—	EEUFC1J181S( )	200	500
	220	10.0	20.0	885	0.147	3000	0.60	5.0	5.0	—	EEUFC1J221X( )	200	500
		10.0	25.0	1050	0.130	3000	0.60	5.0	5.0	—	EEUFC1J221( )	200	500
		12.5	20.0	1285	0.085	5000	0.60	5.0	5.0	—	EEUFC1J221S( )	200	500
	270	16.0	15.0	1410	0.090	5000	0.80	7.5	7.5	—	EEUFC1J271( )	100	250
	330	10.0	30.0	1300	0.090	3000	0.60	5.0	—	—	EEUFC1J331L	100	—
		12.5	20.0	1285	0.085	5000	0.60	5.0	5.0	—	EEUFC1J331( )	200	500
	390	12.5	25.0	1720	0.070	5000	0.60	5.0	5.0	—	EEUFC1J391( )	200	500
		18.0	15.0	1690	0.086	5000	0.80	7.5	7.5	—	EEUFC1J391S( )	100	250
	470	12.5	30.0	2090	0.055	5000	0.80	5.0	—	—	EEUFC1J471L	100	—
		16.0	20.0	1765	0.059	5000	0.80	7.5	7.5	—	EEUFC1J471( )	100	250
	560	16.0	25.0	2160	0.050	5000	0.80	7.5	7.5	—	EEUFC1J561( )	100	250
	680	12.5	35.0	2265	0.047	5000	0.80	5.0	—	—	EEUFC1J681L	100	—
		16.0	25.0	2160	0.050	5000	0.80	7.5	7.5	—	EEUFC1J681( )	100	250
		18.0	20.0	2290	0.055	5000	0.80	7.5	7.5	—	EEUFC1J681S( )	100	250
	EOL 820	12.5	40.0	2560	0.042	5000	0.80	5.0	—	—	EEUFC1J821L	100	—
	820	16.0	31.5	2670	0.043	5000	0.80	7.5	—	—	EEUFC1J821	100	—
		18.0	25.0	2585	0.043	5000	0.80	7.5	7.5	—	EEUFC1J821S( )	100	250
	1000	16.0	31.5	2670	0.043	5000	0.80	7.5	—	—	EEUFC1J102U	100	—
	EOL 1000	16.0	35.5	2770	0.036	5000	0.80	7.5	—	—	EEUFC1J102	100	—
	EOL 1200	16.0	40.0	2825	0.030	5000	0.80	7.5	—	—	EEUFC1J122L	100	—
	1200	18.0	31.5	2950	0.032	5000	0.80	7.5	—	—	EEUFC1J122	50	—
	1500	18.0	35.5	3095	0.030	5000	0.80	7.5	—	—	EEUFC1J152	50	—
	1800	18.0	40.0	3205	0.025	5000	0.80	7.5	—	—	EEUFC1J182	50	—

*1: Ripple current (100 kHz / +105 ℃)
*2: Impedance (100 kHz / +20 ℃)

EOL End of life

・When requesting taped product, please put the letter "B" or "H" be tween the "( )".
Lead wire pitch ✻B=5 mm, 7.5 mm, H=2.5 mm.
・Please refer to the page of “Taping dimensions”.

Design and specifications are each subject to change without notice. Ask factory for the current technical specifications before purchase and/or use.
Should a safety concern arise regarding this product, please be sure to contact us immediately.

Characteristics list

Endurance : 105 ℃ 1000 h / ø4 to ø6.3, 105 ℃ 2000 h / ø8, 105 ℃ 3000 h / ø10, 105 ℃ 5000 h / ø12.5 to ø18

Rated voltage (V)	Capacitance (±20 %) (μF)	Case size (mm)		Specification			Lead length (mm)				Part No.	Min. Packaging Q'ty (PCS)	
		øD	L	Ripple current*1 (mA rms)	Impe-dance*2 (Ω)	Endu-rance (h)	Lead dia. (ød)	Lead space: Straight	Lead space: Taping ✻B	Lead space: Taping ✻H		Straight leads	Taping
100	5.6	5.0	11.0	80	4.100	1000	0.5	2.0	5.0	2.5	EEUFC2A5R6( )	200	2000
	12	6.3	11.2	114	1.800	1000	0.5	2.5	5.0	2.5	EEUFC2A120( )	200	2000
	22	8.0	11.5	260	0.680	2000	0.6	3.5	5.0	—	EEUFC2A220( )	200	1000
	33	8.0	15.0	340	0.450	2000	0.6	3.5	5.0	—	EEUFC2A330L( )	200	1000
		10.0	12.5	306	0.530	3000	0.6	5.0	5.0	—	EEUFC2A330( )	200	500
	39	8.0	20.0	455	0.330	2000	0.6	5.0	5.0	—	EEUFC2A390L( )	200	1000
		10.0	16.0	400	0.360	3000	0.6	5.0	5.0	—	EEUFC2A390( )	200	500
	47	10.0	20.0	463	0.240	3000	0.6	5.0	5.0	—	EEUFC2A470( )	200	500
	56	10.0	20.0	463	0.240	3000	0.6	5.0	5.0	—	EEUFC2A560( )	200	500
	68	10.0	25.0	599	0.210	3000	0.6	5.0	5.0	—	EEUFC2A680L( )	200	500
		12.5	15.0	511	0.230	5000	0.6	5.0	5.0	—	EEUFC2A680( )	200	500
	100	10.0	30.0	698	0.150	3000	0.6	5.0	—	—	EEUFC2A101L	100	—
		12.5	20.0	671	0.180	5000	0.6	5.0	5.0	—	EEUFC2A101( )	200	500
	120	16.0	15.0	793	0.140	5000	0.8	7.5	7.5	—	EEUFC2A121S( )	100	250
	150	12.5	25.0	807	0.110	5000	0.6	5.0	5.0	—	EEUFC2A151( )	200	500
		18.0	15.0	917	0.120	5000	0.8	7.5	7.5	—	EEUFC2A151S( )	100	250
	180	12.5	30.0	937	0.098	5000	0.8	5.0	—	—	EEUFC2A181L	100	—
		16.0	20.0	995	0.110	5000	0.8	7.5	7.5	—	EEUFC2A181( )	100	250
	220	12.5	35.0	1040	0.087	5000	0.8	5.0	—	—	EEUFC2A221L	100	—
		16.0	25.0	1170	0.089	5000	0.8	7.5	7.5	—	EEUFC2A221( )	100	250
	EOL 270	12.5	40.0	1130	0.072	5000	0.8	5.0	—	—	EEUFC2A271L	100	—
	270	18.0	20.0	1230	0.080	5000	0.8	7.5	7.5	—	EEUFC2A271S( )	100	250
	330	16.0	31.5	1520	0.062	5000	0.8	7.5	—	—	EEUFC2A331	100	—
		18.0	25.0	1420	0.070	5000	0.8	7.5	7.5	—	EEUFC2A331S( )	100	250
	EOL 390	16.0	35.5	1730	0.053	5000	0.8	7.5	—	—	EEUFC2A391L	100	—
	390	18.0	31.5	1600	0.062	5000	0.8	7.5	—	—	EEUFC2A391	50	—
	EOL 470	16.0	40.0	1920	0.047	5000	0.8	7.5	—	—	EEUFC2A471	100	—
	560	18.0	35.5	1770	0.041	5000	0.8	7.5	—	—	EEUFC2A561	50	—
	680	18.0	40.0	2300	0.036	5000	0.8	7.5	—	—	EEUFC2A681	50	—

*1: Ripple current (100 kHz / +105 ℃)

*2: Impedance (100 kHz / +20 ℃)

EOL End of life

・When requesting taped product, please put the letter "B" or "H" be tween the "( )".
Lead wire pitch ✻B=5 mm, 7.5 mm, H=2.5 mm.

・Please refer to the page of “Taping dimensions”.

Panasonic INDUSTRY

⚠ Some part numbers are discontinued.

Aluminum Electrolytic Capacitors

Radial Lead Type

FK-A series

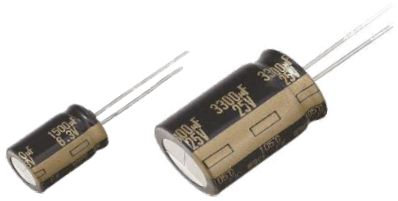

■Not available in Japan

Features

- Endurance : 105 ℃ 3000 h to 5000 h
- Low impedance (10 % to 30 % less than FC Series)
- Miniaturization (30 % to 40 % less than FC Series)
- AEC-Q200 compliant
- RoHS compliant

Specifications

Category temp. range	–55 ℃ to +105 ℃						
Rated voltage range	6.3 V to 35 V						
Capacitance range	180 μF to 12000 μF						
Capacitance tolerance	±20 % (120 Hz / +20℃)						
Leakage current	I ≦ 0.01 CV (μA) After 2 minutes						
Dissipation factor (tan δ)	Rated voltage (V)	6.3	10	16	25	35	(120 Hz /+20℃)
	Dissipation factor (tan δ)	0.22	0.19	0.16	0.14	0.12	
	For capacitance value ≧ 1000 μF , add 0.02 per every 1000 μF.						
Endurance	After following life test with DC voltage and +105 ℃±2 ℃ ripple current value applied (The sum of DC and ripple peak voltage shall not exceed the rated working voltage)when the capacitors are restored to 20 ℃, the capacitors shall meet the limits specified bellow. Duration ø8 : 3000 h, ø10 : 4000 h, ø12.5 to ø18 : 5000 h						
	Capacitance change	Within ±20 % of the initial value					
	Dissipation factor（tan δ)	≦ 200 % of the initial limit					
	DC leakage current	Within the initial limit					
Shelf life	After storage for 1000 h at +105 ℃±2 ℃ with no voltage applied and then being stabilized at +20 °C, capacitors shall meet the limits specified in endurance. (With voltage treatment)						

Frequency correction factor for ripple current

Cap. (μF) \ Freq. (Hz)	60	120	1 k	10 k	100 k
180 to 330	0.60	0.70	0.85	0.95	1.00
390 to 1000	0.65	0.75	0.90	0.98	1.00
1200 to 12000	0.75	0.80	0.95	1.00	1.00

Dimensions

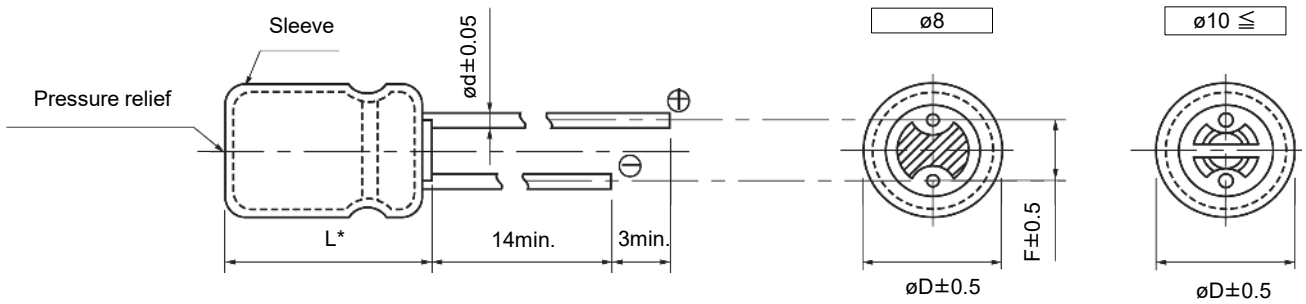

* L ≦ 16 : L±1.5
  L ≧ 20 : L±2.0

Unit : mm

øD	8.0	10.0	12.5		16.0	18.0
L	—	—	12.5 to 25	30 to 35	—	—
ød	0.6	0.6	0.6	0.8	0.8	0.8
F	3.5	5.0	5.0	5.0	7.5	7.5

Design and specifications are each subject to change without notice. Ask factory for the current technical specifications before purchase and/or use.
Should a safety concern arise regarding this product, please be sure to contact us immediately.

Case size / Impedance / Ripple current

Casecsize (mm) (øD×L)	Impedance (Ω) (100 kHz)		Ripple current (mA rms) (100 kHz)
	+20 ℃	-10 ℃	+105 ℃
8 × 11.5	0.090	0.180	630
8 × 15	0.062	0.124	860
8 × 20	0.044	0.088	1220
10 × 12.5	0.063	0.126	900
10 × 16	0.049	0.098	1240
10 × 20	0.035	0.070	1490
10 × 25	0.033	0.066	1680
10 × 30	0.025	0.050	2140
12.5 × 15	0.048	0.096	1400
12.5 × 20	0.029	0.058	1890
12.5 × 25	0.022	0.044	2280
12.5 × 30	0.018	0.036	2720
12.5 × 35	0.016	0.032	2940
12.5 × 40	0.014	0.028	3010
16 × 15	0.038	0.076	1800
16 × 20	0.026	0.052	2330
16 × 25	0.019	0.038	2760
18 × 15	0.036	0.072	2060
18 × 20	0.025	0.050	2640
18 × 25	0.018	0.036	2850

Design and specifications are each subject to change without notice. Ask factory for the current technical specifications before purchase and/or use.
Should a safety concern arise regarding this product, please be sure to contact us immediately.

Characteristics list

Endurance : 105 ℃ 3000 h / ø8, 105 ℃ 4000 h / ø10, 105 ℃ 5000 h / ø12.5 to ø18

Rated voltage (V)	Capacitance (±20 %) (μF)	Case size (mm)		Specification			Lead length (mm)			Part No.	Min. Packaging Q'ty (PCS)	
								Lead space				
		øD	L	Ripple current*1 (mA rms)	Impe-dance*2 (Ω)	Endu-rance (h)	Lead dia. (ød)	Straight	Taping ✻B		Straight leads	Taping
6.3	680	8.0	11.5	630	0.090	3000	0.6	3.5	5.0	EEUFK0J681( )	200	1000
	1000	8.0	15.0	860	0.062	3000	0.6	3.5	5.0	EEUFK0J102L( )	200	1000
		10.0	12.5	900	0.063	4000	0.6	5.0	5.0	EEUFK0J102( )	200	500
	1500	8.0	20.0	1220	0.044	3000	0.6	3.5	5.0	EEUFK0J152L( )	200	1000
		10.0	16.0	1240	0.049	4000	0.6	5.0	5.0	EEUFK0J152( )	200	500
	1800	12.5	15.0	1400	0.048	5000	0.6	5.0	5.0	EEUFK0J182S( )	200	500
	2200	10.0	20.0	1490	0.035	4000	0.6	5.0	5.0	EEUFK0J222( )	200	500
		10.0	25.0	1680	0.033	4000	0.6	5.0	5.0	EEUFK0J222L( )	200	500
	3300	10.0	30.0	2140	0.025	4000	0.6	5.0	—	EEUFK0J332L	100	—
		12.5	20.0	1890	0.029	5000	0.6	5.0	5.0	EEUFK0J332( )	200	500
		16.0	15.0	1800	0.038	5000	0.8	7.5	7.5	EEUFK0J332S( )	100	250
	4700	12.5	25.0	2280	0.022	5000	0.6	5.0	5.0	EEUFK0J472( )	200	500
		18.0	15.0	2060	0.036	5000	0.8	7.5	7.5	EEUFK0J472S( )	100	250
	5600	12.5	30.0	2720	0.018	5000	0.8	5.0	—	EEUFK0J562L	100	—
		16.0	20.0	2330	0.026	5000	0.8	7.5	7.5	EEUFK0J562S( )	100	250
	6800	12.5	35.0	2940	0.016	5000	0.8	5.0	—	EEUFK0J682L	100	—
	EOL 8200	12.5	40.0	3010	0.014	5000	0.8	5.0	—	EEUFK0J822L	100	—
	8200	16.0	25.0	2760	0.019	5000	0.8	7.5	7.5	EEUFK0J822( )	100	250
		18.0	20.0	2640	0.025	5000	0.8	7.5	7.5	EEUFK0J822S( )	100	250
	12000	18.0	25.0	2850	0.018	5000	0.8	7.5	7.5	EEUFK0J123S( )	100	250
10	560	8.0	11.5	630	0.090	3000	0.6	3.5	5.0	EEUFK1A561( )	200	1000
	820	8.0	15.0	860	0.062	3000	0.6	3.5	5.0	EEUFK1A821L( )	200	1000
		10.0	12.5	900	0.063	4000	0.6	5.0	5.0	EEUFK1A821( )	200	500
	1200	8.0	20.0	1220	0.044	3000	0.6	3.5	5.0	EEUFK1A122L( )	200	1000
		10.0	16.0	1240	0.049	4000	0.6	5.0	5.0	EEUFK1A122( )	200	500
	1500	12.5	15.0	1400	0.048	5000	0.6	5.0	5.0	EEUFK1A152S( )	200	500
	1800	10.0	20.0	1490	0.035	4000	0.6	5.0	5.0	EEUFK1A182( )	200	500
		10.0	25.0	1680	0.033	4000	0.6	5.0	5.0	EEUFK1A182L( )	200	500
	2700	10.0	30.0	2140	0.025	4000	0.6	5.0	—	EEUFK1A272L	100	—
		12.5	20.0	1890	0.029	5000	0.6	5.0	5.0	EEUFK1A272( )	200	500
		16.0	15.0	1800	0.038	5000	0.8	7.5	7.5	EEUFK1A272S( )	100	250
	3900	12.5	25.0	2280	0.022	5000	0.6	5.0	5.0	EEUFK1A392( )	200	500
		18.0	15.0	2060	0.036	5000	0.8	7.5	7.5	EEUFK1A392S( )	100	250
	4700	12.5	30.0	2720	0.018	5000	0.8	5.0	—	EEUFK1A472L	100	—
		16.0	20.0	2330	0.026	5000	0.8	7.5	7.5	EEUFK1A472S( )	100	250
	5600	12.5	35.0	2940	0.016	5000	0.8	5.0	—	EEUFK1A562L	100	—
	EOL 6800	12.5	40.0	3010	0.014	5000	0.8	5.0	—	EEUFK1A682L	100	—
	6800	16.0	25.0	2760	0.019	5000	0.8	7.5	7.5	EEUFK1A682( )	100	250
		18.0	20.0	2640	0.025	5000	0.8	7.5	7.5	EEUFK1A682S( )	100	250
	8200	18.0	25.0	2850	0.018	5000	0.8	7.5	7.5	EEUFK1A822S( )	100	250

*1: Ripple current (100 kHz / +105 ℃)

*2: Impedance (100 kHz / +20 ℃)

EOL End of life

・When requesting taped product, please put the letter "B" be tween the "( )". Lead wire pitch ✻B=5 mm, 7.5 mm.

・Please refer to the page of “Taping dimensions”.

Design and specifications are each subject to change without notice. Ask factory for the current technical specifications before purchase and/or use.
Should a safety concern arise regarding this product, please be sure to contact us immediately.

Characteristics list

Endurance : 105 ℃ 3000 h / ø8, 105 ℃ 4000 h / ø10, 105 ℃ 5000 h / ø12.5 to ø18

Rated voltage (V)	Capacitance (±20 %) (μF)	Case size (mm)		Specification			Lead length (mm)			Part No.	Min. Packaging Q'ty (PCS)	
								Lead space				
		øD	L	Ripple current*1 (mA rms)	Impe-dance*2 (Ω)	Endu-rance (h)	Lead dia. (ød)	Straight	Taping ✻B		Straight leads	Taping
16	390	8.0	11.5	630	0.090	3000	0.6	3.5	5.0	EEUFK1C391( )	200	1000
	680	8.0	15.0	860	0.062	3000	0.6	3.5	5.0	EEUFK1C681L( )	200	1000
		10.0	12.5	900	0.063	4000	0.6	5.0	5.0	EEUFK1C681( )	200	500
	820	8.0	20.0	1220	0.044	3000	0.6	3.5	5.0	EEUFK1C821L( )	200	1000
	1000	10.0	16.0	1240	0.049	4000	0.6	5.0	5.0	EEUFK1C102( )	200	500
	1200	10.0	20.0	1490	0.035	4000	0.6	5.0	5.0	EEUFK1C122( )	200	500
		12.5	15.0	1400	0.048	5000	0.6	5.0	5.0	EEUFK1C122S( )	200	500
	1500	10.0	25.0	1680	0.033	4000	0.6	5.0	5.0	EEUFK1C152L( )	200	500
	2200	10.0	30.0	2140	0.025	4000	0.6	5.0	—	EEUFK1C222L	100	—
		12.5	20.0	1890	0.029	5000	0.6	5.0	5.0	EEUFK1C222( )	200	500
		16.0	15.0	1800	0.038	5000	0.8	7.5	7.5	EEUFK1C222S( )	100	250
	2700	12.5	25.0	2280	0.022	5000	0.6	5.0	5.0	EEUFK1C272( )	200	500
		18.0	15.0	2060	0.036	5000	0.8	7.5	7.5	EEUFK1C272S( )	100	250
	3300	12.5	30.0	2720	0.018	5000	0.8	5.0	—	EEUFK1C332L	100	—
	3900	12.5	35.0	2940	0.016	5000	0.8	5.0	—	EEUFK1C392L	100	—
		16.0	20.0	2330	0.026	5000	0.8	7.5	7.5	EEUFK1C392S( )	100	250
	EOL 4700	12.5	40.0	3010	0.014	5000	0.8	5.0	—	EEUFK1C472L	100	—
	4700	18.0	20.0	2640	0.025	5000	0.8	7.5	7.5	EEUFK1C472S( )	100	250
	5600	16.0	25.0	2760	0.019	5000	0.8	7.5	7.5	EEUFK1C562( )	100	250
	6800	18.0	25.0	2850	0.018	5000	0.8	7.5	7.5	EEUFK1C682S( )	100	250
25	270	8.0	11.5	630	0.090	3000	0.6	3.5	5.0	EEUFK1E271( )	200	1000
	390	8.0	15.0	860	0.062	3000	0.6	3.5	5.0	EEUFK1E391L( )	200	1000
	470	10.0	12.5	900	0.063	4000	0.6	5.0	5.0	EEUFK1E471( )	200	500
	560	8.0	20.0	1220	0.044	3000	0.6	3.5	5.0	EEUFK1E561L( )	200	1000
		10.0	16.0	1240	0.049	4000	0.6	5.0	5.0	EEUFK1E561( )	200	500
	820	10.0	20.0	1490	0.035	4000	0.6	5.0	5.0	EEUFK1E821( )	200	500
		12.5	15.0	1400	0.048	5000	0.6	5.0	5.0	EEUFK1E821S( )	200	500
	1000	10.0	25.0	1680	0.033	4000	0.6	5.0	5.0	EEUFK1E102L( )	200	500
	1200	12.5	20.0	1890	0.029	5000	0.6	5.0	5.0	EEUFK1E122( )	200	500
	1500	10.0	30.0	2140	0.025	4000	0.6	5.0	—	EEUFK1E152L	100	—
		16.0	15.0	1800	0.038	5000	0.8	7.5	7.5	EEUFK1E152S( )	100	250
	1800	12.5	25.0	2280	0.022	5000	0.6	5.0	5.0	EEUFK1E182( )	200	500
		18.0	15.0	2060	0.036	5000	0.8	7.5	7.5	EEUFK1E182S( )	100	250
	2200	12.5	30.0	2720	0.018	5000	0.8	5.0	—	EEUFK1E222L	100	—
		16.0	20.0	2330	0.026	5000	0.8	7.5	7.5	EEUFK1E222S( )	100	250
	2700	12.5	35.0	2940	0.016	5000	0.8	5.0	—	EEUFK1E272L	100	—
	EOL 3300	12.5	40.0	3010	0.014	5000	0.8	5.0	—	EEUFK1E332L	100	—
	3300	16.0	25.0	2760	0.019	5000	0.8	7.5	7.5	EEUFK1E332( )	100	250
		18.0	20.0	2640	0.025	5000	0.8	7.5	7.5	EEUFK1E332S( )	100	250
	4700	18.0	25.0	2850	0.018	5000	0.8	7.5	7.5	EEUFK1E472S( )	100	250

*1: Ripple current (100 kHz / +105 ℃)

*2: Impedance (100 kHz / +20 ℃)

EOL End of life

・When requesting taped product, please put the letter "B" be tween the "( )". Lead wire pitch ✻B=5 mm, 7.5 mm.

・Please refer to the page of “Taping dimensions”.

Characteristics list

Endurance : 105 ℃ 3000 h / ø8, 105 ℃ 4000 h / ø10, 105 ℃ 5000 h / ø12.5 to ø18

Rated voltage (V)	Capacitance (±20 %) (μF)	Case size (mm)		Specification			Lead length (mm)			Part No.	Min. Packaging Q'ty (PCS)	
								Lead space				
		øD	L	Ripple current*1 (mA rms)	Impe-dance*2 (Ω)	Endu-rance (h)	Lead dia. (ød)	Straight	Taping ✻B		Straight leads	Taping
35	180	8.0	11.5	630	0.090	3000	0.6	3.5	5.0	EEUFK1V181( )	200	1000
	270	8.0	15.0	860	0.062	3000	0.6	3.5	5.0	EEUFK1V271L( )	200	1000
		10.0	12.5	900	0.063	4000	0.6	5.0	5.0	EEUFK1V271( )	200	500
	390	8.0	20.0	1220	0.044	3000	0.6	3.5	5.0	EEUFK1V391L( )	200	1000
		10.0	16.0	1240	0.049	4000	0.6	5.0	5.0	EEUFK1V391( )	200	500
	560	10.0	20.0	1490	0.035	4000	0.6	5.0	5.0	EEUFK1V561( )	200	500
		12.5	15.0	1400	0.048	5000	0.6	5.0	5.0	EEUFK1V561S( )	200	500
	680	10.0	25.0	1680	0.033	4000	0.6	5.0	5.0	EEUFK1V681L( )	200	500
	820	12.5	20.0	1890	0.029	5000	0.6	5.0	5.0	EEUFK1V821( )	200	500
	1000	10.0	30.0	2140	0.025	4000	0.6	5.0	—	EEUFK1V102L	100	—
		16.0	15.0	1800	0.038	5000	0.8	7.5	7.5	EEUFK1V102S( )	100	250
	1200	12.5	25.0	2280	0.022	5000	0.6	5.0	5.0	EEUFK1V122( )	200	500
		18.0	15.0	2060	0.036	5000	0.8	7.5	7.5	EEUFK1V122S( )	100	250
	1500	12.5	30.0	2720	0.018	5000	0.8	5.0	—	EEUFK1V152L	100	—
	1800	12.5	35.0	2940	0.016	5000	0.8	5.0	—	EEUFK1V182L	100	—
		16.0	20.0	2330	0.026	5000	0.8	7.5	7.5	EEUFK1V182S( )	100	250
	EOL 2200	12.5	40.0	3010	0.014	5000	0.8	5.0	—	EEUFK1V222L	100	—
	2200	16.0	25.0	2760	0.019	5000	0.8	7.5	7.5	EEUFK1V222( )	100	250
		18.0	20.0	2640	0.025	5000	0.8	7.5	7.5	EEUFK1V222S( )	100	250
	3300	18.0	25.0	2850	0.018	5000	0.8	7.5	7.5	EEUFK1V332S( )	100	250

*1: Ripple current (100 kHz / +105 ℃)

*2: Impedance (100 kHz / +20 ℃)

EOL End of life

・When requesting taped product, please put the letter "B" be tween the "( )". Lead wire pitch ✻B=5 mm, 7.5 mm.

・Please refer to the page of “Taping dimensions”.

Panasonic INDUSTRY

⚠ This Series is no longer available for purchase in the country of Japan.

Aluminum Electrolytic Capacitors

Radial Lead Type

FM-A series

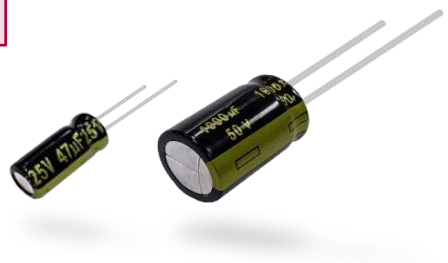

Features

- Endurance : 105 ℃ 2000 h to 7000 h
- Low impedance (40 % to 70 % less than FC series)
- RoHS compliant

Specifications

Category temp. range	–40 ℃ to +105 ℃								
Rated voltage range	6.3 V to 50 V								
Capacitance range	22 μF to 6800 μF								
Capacitance tolerance	±20 % (120 Hz / +20℃)								
Leakage current	I ≦ 0.01 CV (μA) After 2 minutes								
Dissipation factor (tan δ)	Rated voltage (V)	6.3	10	16	25	35	50	(120 Hz /+20℃)	
	Dissipation factor (tan δ)	0.22	0.19	0.16	0.14	0.12	0.10		
	For capacitance value ≧ 1000 μF, add 0.02 per every 1000 μF.								
Endurance	After following life test with DC voltage and +105 ℃±2 ℃ ripple current value applied (The sum of DC and ripple peak voltage shall not exceed the rated working voltage)when the capacitors are restored to 20 ℃, the capacitors shall meet the limits specified bellow. Duration ø5 to ø6.3 : 2000 h, ø8×11.5 to ø8×15: 3000 h ø8×20 to ø10×16 : 4000 h, ø10×20 to ø12.5×20/ ø16×20 : 5000 h ø12.5×25 to ø12.5×35/ ø16×25 : 7000 h								
	Capacitance change	Within ±25 % of the initial value (6.3 V to 10 V : ±30 %)							
	Dissipation factor (tan δ)	≦ 200 % of the initial limit							
	DC leakage current	Within the initial limit							
Shelf life	After storage for 1000 h at +105 ℃±2 ℃ with no voltage applied and then being stabilized at +20 °C, capacitors shall meet the limits specified in endurance. (With voltage treatment)								

Frequency correction factor for ripple current

Cap. (μF) \ Freq. (Hz)	60	120	1 k	10 k	100 k
2.2 to 33	0.45	0.55	0.75	0.90	1.00
47 to 330	0.60	0.70	0.85	0.95	1.00
390 to 1000	0.65	0.75	0.90	0.98	1.00
1200 to 6800	0.75	0.80	0.95	1.00	1.00

Dimensions

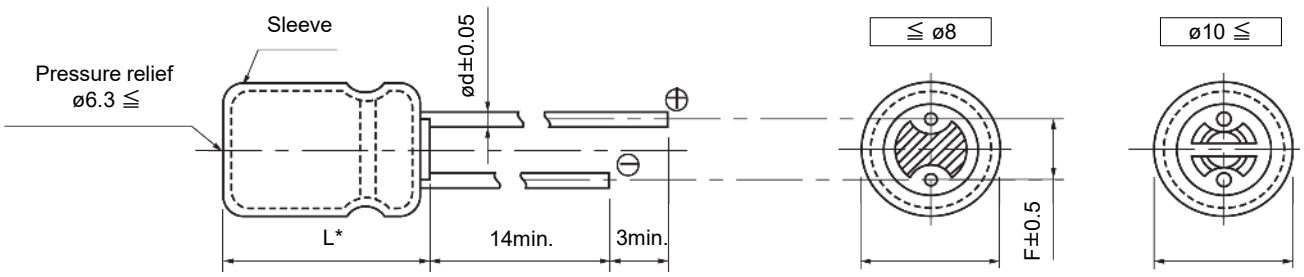

* L ≦ 16 : L±1.5
  L ≧ 20 : L±2.0

Unit : mm

øD	5.0	6.3	8.0	10.0	12.5		16.0
L	—	—	—	—	12.5 to 25	30 to 40	—
ød	0.5	0.5	0.6	0.6	0.6	0.8	0.8
F	2.0	2.5	3.5	5.0	5.0	5.0	7.5

Design and specifications are each subject to change without notice. Ask factory for the current technical specifications before purchase and/or use.
Should a safety concern arise regarding this product, please be sure to contact us immediately.

Case size / Impedance / Ripple current

R. voltage (V) / Case size (mm) (øD×L)	6.3 to 35			50		
	Impedance*1 (Ω)		Ripple current*1 (mA rms)	Impedance*1 (Ω)		Ripple current*1 (mA rms)
	+20 ℃	-10 ℃	+105 ℃	+20 ℃	-10 ℃	+105 ℃
5 × 11	0.300	1.000	280	0.340	1.130	250
6.3 × 11.2	0.130	0.430	455	0.140	0.460	405
8 × 11.5	0.056	0.168	950	0.061	0.183	870
8 × 15	0.041	0.123	1240	0.045	0.135	1140
8 × 20	0.030	0.090	1560	0.033	0.099	1430
10 × 12.5	0.038	0.114	1290	0.042	0.126	1170
10 × 16	0.026	0.078	1790	0.030	0.090	1650
10 × 20	0.019	0.057	2180	0.023	0.069	1890
10 × 25	0.018	0.054	2470	0.022	0.066	2150
12.5 × 20	0.018	0.045	2600	0.022	0.055	2260
12.5 × 25	0.015	0.038	3190	0.018	0.045	2660
12.5 × 30	0.013	0.033	3630	0.016	0.040	3160
12.5 × 35	0.012	0.030	3750	0.014	0.035	3270
16 × 20	0.017	0.043	3300	0.019	0.048	2870
16 × 25	0.014	0.035	3820	0.016	0.040	3320

*1: 100 kHz

Design and specifications are each subject to change without notice. Ask factory for the current technical specifications before purchase and/or use.
Should a safety concern arise regarding this product, please be sure to contact us immediately.

Characteristics list

Rated voltage (V)	Capacitance (±20 %) (μF)	Case size (mm)		Specification			Lead length (mm)				Part No.	Min. Packaging Q'ty (PCS)	
								Lead space					
		øD	L	Ripple current*1 (mA rms)	Impe-dance*2 (Ω)	Endu-rance (h)	Lead dia. (ød)	Straight	Taping ✻B	Taping ✻H		Straight leads	Taping
6.3	150	5.0	11.0	280	0.300	2000	0.5	2.0	5.0	2.5	EEUFM0J151( )	200	2000
	330	6.3	11.2	455	0.130	2000	0.5	2.5	5.0	2.5	EEUFM0J331( )	200	2000
	560	8.0	11.5	950	0.056	3000	0.6	3.5	5.0	—	EEUFM0J561( )	200	1000
	820	8.0	15.0	1240	0.041	3000	0.6	3.5	5.0	—	EEUFM0J821L( )	200	1000
	1000	10.0	12.5	1290	0.038	4000	0.6	5.0	5.0	—	EEUFM0J102( )	200	500
	1200	8.0	20.0	1560	0.030	4000	0.6	3.5	5.0	—	EEUFM0J122L( )	200	1000
		10.0	16.0	1790	0.026	4000	0.6	5.0	5.0	—	EEUFM0J122( )	200	500
	1500	10.0	20.0	2180	0.019	5000	0.6	5.0	5.0	—	EEUFM0J152( )	200	500
	2200	10.0	25.0	2470	0.018	5000	0.6	5.0	5.0	—	EEUFM0J222L( )	200	500
	3300	12.5	20.0	2600	0.018	5000	0.6	5.0	5.0	—	EEUFM0J332( )	200	500
	3900	12.5	25.0	3190	0.015	7000	0.6	5.0	5.0	—	EEUFM0J392( )	200	500
	4700	12.5	30.0	3630	0.013	7000	0.8	5.0	—	—	EEUFM0J472L	100	—
	5600	12.5	35.0	3750	0.012	7000	0.8	5.0	—	—	EEUFM0J562L	100	—
		16.0	20.0	3300	0.017	5000	0.8	7.5	7.5	—	EEUFM0J562S( )	100	250
	6800	16.0	25.0	3820	0.014	7000	0.8	7.5	7.5	—	EEUFM0J682( )	100	250
10	100	5.0	11.0	280	0.300	2000	0.5	2.0	5.0	2.5	EEUFM1A101( )	200	2000
	220	6.3	11.2	455	0.130	2000	0.5	2.5	5.0	2.5	EEUFM1A221( )	200	2000
	470	8.0	11.5	950	0.056	3000	0.6	3.5	5.0	—	EEUFM1A471( )	200	1000
	680	8.0	15.0	1240	0.041	3000	0.6	3.5	5.0	—	EEUFM1A681L( )	200	1000
		10.0	12.5	1290	0.038	4000	0.6	5.0	5.0	—	EEUFM1A681( )	200	500
	1000	8.0	20.0	1560	0.030	4000	0.6	3.5	5.0	—	EEUFM1A102L( )	200	1000
		10.0	16.0	1790	0.026	4000	0.6	5.0	5.0	—	EEUFM1A102( )	200	500
	1200	10.0	20.0	2180	0.019	5000	0.6	5.0	5.0	—	EEUFM1A122( )	200	500
	1500	10.0	25.0	2470	0.018	5000	0.6	5.0	5.0	—	EEUFM1A152L( )	200	500
	2200	12.5	20.0	2600	0.018	5000	0.6	5.0	5.0	—	EEUFM1A222( )	200	500
	3300	12.5	25.0	3190	0.015	7000	0.6	5.0	5.0	—	EEUFM1A332( )	200	500
	3900	12.5	30.0	3630	0.013	7000	0.8	5.0	—	—	EEUFM1A392L	100	—
		16.0	20.0	3300	0.017	5000	0.8	7.5	7.5	—	EEUFM1A392S( )	100	250
	4700	12.5	35.0	3750	0.012	7000	0.8	5.0	—	—	EEUFM1A472L	100	—
	5600	16.0	25.0	3820	0.014	7000	0.8	7.5	7.5	—	EEUFM1A562( )	100	250
16	68	5.0	11.0	280	0.300	2000	0.5	2.0	5.0	2.5	EEUFM1C680( )	200	2000
	120	6.3	11.2	455	0.130	2000	0.5	2.5	5.0	2.5	EEUFM1C121( )	200	2000
	330	8.0	11.5	950	0.056	3000	0.6	3.5	5.0	—	EEUFM1C331( )	200	1000
	470	8.0	15.0	1240	0.041	3000	0.6	3.5	5.0	—	EEUFM1C471L( )	200	1000
		10.0	12.5	1290	0.038	4000	0.6	5.0	5.0	—	EEUFM1C471( )	200	500
	680	8.0	20.0	1560	0.030	4000	0.6	3.5	5.0	—	EEUFM1C681L( )	200	1000
		10.0	16.0	1790	0.026	4000	0.6	5.0	5.0	—	EEUFM1C681( )	200	500
	1000	10.0	20.0	2180	0.019	5000	0.6	5.0	5.0	—	EEUFM1C102( )	200	500
	1200	10.0	25.0	2470	0.018	5000	0.6	5.0	5.0	—	EEUFM1C122L( )	200	500
	1500	12.5	20.0	2600	0.018	5000	0.6	5.0	5.0	—	EEUFM1C152( )	200	500
	2200	12.5	25.0	3190	0.015	7000	0.6	5.0	5.0	—	EEUFM1C222( )	200	500
	2700	12.5	30.0	3630	0.013	7000	0.8	5.0	—	—	EEUFM1C272L	100	—
		16.0	20.0	3300	0.017	5000	0.8	7.5	7.5	—	EEUFM1C272S( )	100	250
	3300	12.5	35.0	3750	0.012	7000	0.8	5.0	—	—	EEUFM1C332L	100	—
	3900	16.0	25.0	3820	0.014	7000	0.8	7.5	7.5	—	EEUFM1C392( )	100	250

*1: Ripple current (100 kHz / +105 ℃)
*2: Impedance (100 kHz / +20 ℃)
・When requesting taped product, please put the letter "B" or "H" be tween the "( )".
Lead wire pitch ✻B=5 mm, 7.5 mm, H=2.5 mm.
・Please refer to the page of “Taping dimensions”.

Design and specifications are each subject to change without notice. Ask factory for the current technical specifications before purchase and/or use.
Should a safety concern arise regarding this product, please be sure to contact us immediately.

Characteristics list

Rated voltage (V)	Capacitance (±20 %) (μF)	Case size (mm)		Specification			Lead length (mm)				Part No.	Min. Packaging Q'ty (PCS)	
								Lead space					
		øD	L	Ripple current*1 (mA rms)	Impe-dance*2 (Ω)	Endu-rance (h)	Lead dia. (ød)	Straight	Taping ✻B	Taping ✻H		Straight leads	Taping
25	47	5.0	11.0	280	0.300	2000	0.5	2.0	5.0	2.5	EEUFM1E470( )	200	2000
	100	6.3	11.2	455	0.130	2000	0.5	2.5	5.0	2.5	EEUFM1E101( )	200	2000
	220	8.0	11.5	950	0.056	3000	0.6	3.5	5.0	—	EEUFM1E221( )	200	1000
	330	8.0	15.0	1240	0.041	3000	0.6	3.5	5.0	—	EEUFM1E331L( )	200	1000
		10.0	12.5	1290	0.038	4000	0.6	5.0	5.0	—	EEUFM1E331( )	200	500
	470	8.0	20.0	1560	0.030	4000	0.6	3.5	5.0	—	EEUFM1E471L( )	200	1000
		10.0	16.0	1790	0.026	4000	0.6	5.0	5.0	—	EEUFM1E471( )	200	500
	680	10.0	20.0	2180	0.019	5000	0.6	5.0	5.0	—	EEUFM1E681( )	200	500
	820	10.0	25.0	2470	0.018	5000	0.6	5.0	5.0	—	EEUFM1E821L( )	200	500
	1000	12.5	20.0	2600	0.018	5000	0.6	5.0	5.0	—	EEUFM1E102( )	200	500
	1500	12.5	25.0	3190	0.015	7000	0.6	5.0	5.0	—	EEUFM1E152( )	200	500
	1800	12.5	30.0	3630	0.013	7000	0.8	5.0	—	—	EEUFM1E182L	100	—
		16.0	20.0	3300	0.017	5000	0.8	7.5	7.5	—	EEUFM1E182S( )	100	250
	2200	12.5	35.0	3750	0.012	7000	0.8	5.0	—	—	EEUFM1E222L	100	—
	2700	16.0	25.0	3820	0.014	7000	0.8	7.5	7.5	—	EEUFM1E272( )	100	250
35	33	5.0	11.0	280	0.300	2000	0.5	2.0	5.0	2.5	EEUFM1V330( )	200	2000
	68	6.3	11.2	455	0.130	2000	0.5	2.5	5.0	2.5	EEUFM1V680( )	200	2000
	150	8.0	11.5	950	0.056	3000	0.6	3.5	5.0	—	EEUFM1V151( )	200	1000
	220	8.0	15.0	1240	0.041	3000	0.6	3.5	5.0	—	EEUFM1V221L( )	200	1000
		10.0	12.5	1290	0.038	4000	0.6	5.0	5.0	—	EEUFM1V221( )	200	500
	330	8.0	20.0	1560	0.030	4000	0.6	3.5	5.0	—	EEUFM1V331L( )	200	1000
		10.0	16.0	1790	0.026	4000	0.6	5.0	5.0	—	EEUFM1V331( )	200	500
	470	10.0	20.0	2180	0.019	5000	0.6	5.0	5.0	—	EEUFM1V471( )	200	500
	560	10.0	25.0	2470	0.018	5000	0.6	5.0	5.0	—	EEUFM1V561L( )	200	500
	680	12.5	20.0	2600	0.018	5000	0.6	5.0	5.0	—	EEUFM1V681( )	200	500
	1000	12.5	25.0	3190	0.015	7000	0.6	5.0	5.0	—	EEUFM1V102( )	200	500
	1200	12.5	30.0	3630	0.013	7000	0.8	5.0	—	—	EEUFM1V122L	100	—
		16.0	20.0	3300	0.017	5000	0.8	7.5	7.5	—	EEUFM1V122S( )	100	250
	1500	12.5	35.0	3750	0.012	7000	0.8	5.0	—	—	EEUFM1V152L	100	—
	1800	16.0	25.0	3820	0.014	7000	0.8	7.5	7.5	—	EEUFM1V182( )	100	250
50	22	5.0	11.0	250	0.340	2000	0.5	2.0	5.0	2.5	EEUFM1H220( )	200	2000
	56	6.3	11.2	405	0.140	2000	0.5	2.5	5.0	2.5	EEUFM1H560( )	200	2000
	100	8.0	11.5	870	0.061	3000	0.6	3.5	5.0	—	EEUFM1H101( )	200	1000
	120	8.0	15.0	1140	0.045	3000	0.6	3.5	5.0	—	EEUFM1H121L( )	200	1000
	150	10.0	12.5	1170	0.042	4000	0.6	5.0	5.0	—	EEUFM1H151( )	200	500
	180	8.0	20.0	1430	0.033	4000	0.6	3.5	5.0	—	EEUFM1H181L( )	200	1000
	220	10.0	16.0	1650	0.030	4000	0.6	5.0	5.0	—	EEUFM1H221( )	200	500
	270	10.0	20.0	1890	0.023	5000	0.6	5.0	5.0	—	EEUFM1H271( )	200	500
	330	10.0	25.0	2150	0.022	5000	0.6	5.0	5.0	—	EEUFM1H331L( )	200	500
	470	12.5	20.0	2260	0.022	5000	0.6	5.0	5.0	—	EEUFM1H471( )	200	500
	560	12.5	25.0	2660	0.018	7000	0.6	5.0	5.0	—	EEUFM1H561( )	200	500
	680	12.5	30.0	3160	0.016	7000	0.8	5.0	—	—	EEUFM1H681L	100	—
	820	12.5	35.0	3270	0.014	7000	0.8	5.0	—	—	EEUFM1H821L	100	—
		16.0	20.0	2870	0.019	5000	0.8	7.5	7.5	—	EEUFM1H821S( )	100	250
	1000	16.0	25.0	3320	0.016	7000	0.8	7.5	7.5	—	EEUFM1H102( )	100	250

*1: Ripple current (100 kHz / +105 ℃)
*2: Impedance (100 kHz / +20 ℃)
・When requesting taped product, please put the letter "B" or "H" be tween the "( )".
Lead wire pitch ✻B=5 mm, 7.5 mm, H=2.5 mm.
・Please refer to the page of “Taping dimensions”.

Design and specifications are each subject to change without notice. Ask factory for the current technical specifications before purchase and/or use.
Should a safety concern arise regarding this product, please be sure to contact us immediately.

Panasonic INDUSTRY

⚠ Some part numbers are discontinued.

Aluminum Electrolytic Capacitors

Radial Lead Type

EB-A series

■Not available in Japan

Features

- Endurance : 105 ℃ 5000 h to 10000 h
- Hight ripple hight frequency (Hight voltage)
- RoHS compliant

Specifications

Category temp. range	−40 ℃ to +105 ℃	−25 ℃ to +105 ℃
Rated voltage range	10 V to 63 V	160 V to 450 V
Capacitance range	2.2 μF to 3300 μF	10 μF to 330 μF
Capacitance tolerance	±20 % (120 Hz / +20℃)	
Leakage current	I ≦ 0.01 CV or 3 (μA) After 2 minutes (Whichever is greater)	I ≦ 0.06 CV + 10 (μA) After 2 minutes
Dissipation factor (tan δ)	Please see the attached characteristics list	
Endurance	After following life test with DC voltage and +105 ℃±2 ℃ ripple current value applied (The sum of DC and ripple peak voltage shall not exceed the rated working voltage), when the capacitors are restored to 20 ℃, the capacitors shall meet the limits specified bellow.	
	(10 V to 63 V) Duration : ø5×11 to ø8×11.5 : 5000 h, ø8×15 to ø12.5×25 : 10000 h	
	Capacitance change	Within ±30 % of the initial value
	Dissipation factor (tan δ)	≦ 300 % of the initial limit
	DC leakage current	Within the initial limit
	(160 V to 450 V) Duration : 5000 h	
	Capacitance change	Within ±20 % of the initial value
	Dissipation factor (tan δ)	≦ 200 % of the initial limit
	DC leakage current	Within the initial limit
Shelf life	After storage for 1000 h at +105 ℃±2 ℃ with no voltage applied and then being stabilized at +20 ℃, capacitors shall meet the limits specified in endurance. (With voltage treatment)	

Frequency correction factor for ripple current

■ 10 V to 63 V

Cap.(μF) \ Freq.(Hz)	60	120	1 k	10 k	100 k
2.2 to 10	0.75	1.00	1.40	1.55	1.65
22 to 470	0.85	1.00	1.20	1.25	1.30
1000 to 3300	0.95	1.00	1.05	1.10	1.15

■ 160 V to 450 V

R. volt.(V) \ Freq.(Hz)	120	1 k	10k to 30k	30k to 100k
160 to 250	0.55	0.85	0.90	1.00
350 to 450	0.50	0.80	0.90	1.00

Dimensions

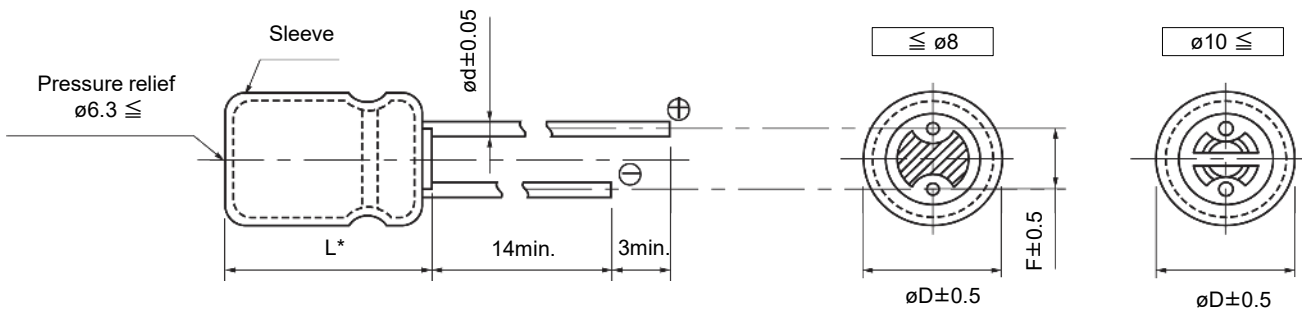

* L ≦ 16 : L±1.0 (ø8x15 only L±1.5)
L ≧ 20 : L±2.0

Unit : mm

øD	5.0	6.3	8.0	10.0	12.5	16.0	18.0
ød	0.5	0.5	0.6	0.6	0.6	0.8	0.8
F	2.0	2.5	3.5	5.0	5.0	7.5	7.5

Design and specifications are each subject to change without notice. Ask factory for the current technical specifications before purchase and/or use.
Should a safety concern arise regarding this product, please be sure to contact us immediately.

Characteristics list

Endurance : 105 ℃ 5000 h / ø5×11 to ø8×11.5, 105 ℃ 10000 h / ø8×15 to ø12.5×25

Rated voltage (V)	Capacitance (±20 %) (μF)	Case size (mm)		Specification			Lead length (mm)				Part No.	Min. Packaging Q'ty (PCS)	
								Lead space					
		øD	L	Ripple current*1 (mA rms)	tan δ*2	Endu-rance (h)	Lead dia. (ød)	Straight	Taping ✻B	Taping ✻H		Straight leads	Taping
10	100	5.0	11.0	66	0.30	5000	0.5	2.0	5.0	2.5	EEUEB1A101S( )	200	2000
	220	6.3	11.2	100	0.30	5000	0.5	2.5	5.0	2.5	EEUEB1A221S( )	200	2000
	470	8.0	15.0	278	0.30	10000	0.6	3.5	5.0	—	EEUEB1A471( )	200	1000
		8.0	11.5	180	0.30	5000	0.6	3.5	5.0	—	EEUEB1A471S( )	200	1000
	2200	12.5	20.0	540	0.32	10000	0.6	5.0	5.0	—	EEUEB1A222( )	200	500
	3300	12.5	25.0	802	0.34	10000	0.6	5.0	5.0	—	EEUEB1A332( )	200	500
16	1000	10.0	20.0	430	0.25	10000	0.6	5.0	5.0	—	EEUEB1C102( )	200	500
	2200	12.5	25.0	706	0.27	10000	0.6	5.0	5.0	—	EEUEB1C222( )	200	500
25	47	5.0	11.0	55	0.22	5000	0.5	2.0	5.0	2.5	EEUEB1E470S( )	200	2000
	100	6.3	11.2	95	0.22	5000	0.5	2.5	5.0	2.5	EEUEB1E101S( )	200	2000
	220	8.0	11.5	125	0.22	5000	0.6	3.5	5.0	—	EEUEB1E221S( )	200	1000
	330	8.0	15.0	255	0.22	10000	0.6	3.5	5.0	—	EEUEB1E331( )	200	1000
	470	10.0	16.0	321	0.22	10000	0.6	5.0	5.0	—	EEUEB1E471( )	200	500
	1000	12.5	20.0	498	0.22	10000	0.6	5.0	5.0	—	EEUEB1E102( )	200	500
35	33	5.0	11.0	46	0.18	5000	0.5	2.0	5.0	2.5	EEUEB1V330S( )	200	2000
	220	8.0	15.0	197	0.18	10000	0.6	3.5	5.0	—	EEUEB1V221( )	200	1000
	330	10.0	16.0	278	0.18	10000	0.6	5.0	5.0	—	EEUEB1V331( )	200	500
	470	10.0	20.0	349	0.18	10000	0.6	5.0	5.0	—	EEUEB1V471( )	200	500
	1000	12.5	25.0	586	0.18	10000	0.6	5.0	5.0	—	EEUEB1V102( )	200	500
50	2.2	5.0	11.0	15	0.15	5000	0.5	2.0	5.0	2.5	EEUEB1H2R2S( )	200	2000
	3.3	5.0	11.0	18	0.15	5000	0.5	2.0	5.0	2.5	EEUEB1H3R3S( )	200	2000
	4.7	5.0	11.0	18	0.15	5000	0.5	2.0	5.0	2.5	EEUEB1H4R7S( )	200	2000
	10	5.0	11.0	27	0.15	5000	0.5	2.0	5.0	2.5	EEUEB1H100S( )	200	2000
	22	5.0	11.0	39	0.15	5000	0.5	2.0	5.0	2.5	EEUEB1H220S( )	200	2000
	47	6.3	11.2	61	0.15	5000	0.5	2.5	5.0	2.5	EEUEB1H470S( )	200	2000
	100	8.0	11.5	99	0.15	5000	0.6	3.5	5.0	—	EEUEB1H101S( )	200	1000
	220	10.0	16.0	234	0.15	10000	0.6	5.0	5.0	—	EEUEB1H221( )	200	500
	330	10.0	20.0	293	0.15	10000	0.6	5.0	5.0	—	EEUEB1H331( )	200	500
	470	12.5	20.0	370	0.15	10000	0.6	5.0	5.0	—	EEUEB1H471( )	200	500
63	2.2	5.0	11.0	16.5	0.12	5000	0.5	2.0	5.0	2.5	EEUEB1J2R2S( )	200	2000
	3.3	5.0	11.0	20	0.12	5000	0.5	2.0	5.0	2.5	EEUEB1J3R3S( )	200	2000
	4.7	5.0	11.0	23	0.12	5000	0.5	2.0	5.0	2.5	EEUEB1J4R7S( )	200	2000
	10	5.0	11.0	30	0.12	5000	0.5	2.0	5.0	2.5	EEUEB1J100S( )	200	2000
	22	6.3	11.2	40	0.12	5000	0.5	2.5	5.0	2.5	EEUEB1J220S( )	200	2000
	33	6.3	11.2	50	0.12	5000	0.5	2.5	5.0	2.5	EEUEB1J330S( )	200	2000
	47	8.0	15.0	94	0.12	10000	0.6	3.5	5.0	—	EEUEB1J470( )	200	1000
		8.0	11.5	80	0.12	5000	0.6	3.5	5.0	—	EEUEB1J470S( )	200	1000
	100	8.0	15.0	180	0.12	10000	0.6	3.5	5.0	—	EEUEB1J101( )	200	1000
	220	10.0	20.0	292	0.12	10000	0.6	5.0	5.0	—	EEUEB1J221( )	200	500
	330	12.5	20.0	381	0.12	10000	0.6	5.0	5.0	—	EEUEB1J331( )	200	500
	470	12.5	25.0	454	0.12	10000	0.6	5.0	5.0	—	EEUEB1J471( )	200	500

*1: Ripple current (120 Hz / +105 ℃)
*2: tan δ (120 Hz / +20 ℃)
・When requesting taped product, please put the letter "B" or "H" be tween the "( )".
Lead wire pitch ✻B=5 mm, H=2.5 mm.
・Please refer to the page of “Taping dimensions”.

Characteristics list

Endurance : 105 ℃ 5000 h

Rated voltage (V)	Capacitance (±20 %) (μF)	Case size (mm) øD	Case size (mm) L	Specification Ripple current*1 (mA rms)	Specification tan δ*2	Specification Endu-rance (h)	Lead length (mm) Lead dia. (ød)	Lead length (mm) Lead space Straight	Lead length (mm) Lead space Taping ✻B	Part No.	Min. Packaging Q'ty (PCS) Straight leads	Min. Packaging Q'ty (PCS) Taping
160	22	10.0	20.0	470	0.15	5000	0.6	5.0	5.0	EEUEB2C220( )	200	500
	33	10.0	20.0	470	0.15	5000	0.6	5.0	5.0	EEUEB2C330( )	200	500
	47	12.5	20.0	600	0.15	5000	0.6	5.0	5.0	EEUEB2C470( )	200	500
	68	12.5	25.0	750	0.15	5000	0.6	5.0	5.0	EEUEB2C680( )	200	500
		16.0	20.0	750	0.15	5000	0.8	7.5	7.5	EEUEB2C680S( )	100	250
	100	16.0	25.0	1060	0.15	5000	0.8	7.5	7.5	EEUEB2C101( )	100	250
		18.0	20.0	1060	0.15	5000	0.8	7.5	7.5	EEUEB2C101S( )	100	250
	150	16.0	31.5	1280	0.15	5000	0.8	7.5	—	EEUEB2C151	100	—
		18.0	25.0	1280	0.15	5000	0.8	7.5	7.5	EEUEB2C151S( )	100	250
	220	16.0	31.5	1280	0.15	5000	0.8	7.5	—	EEUEB2C221	100	—
		18.0	25.0	1280	0.15	5000	0.8	7.5	7.5	EEUEB2C221S( )	100	250
EOL	330	18.0	31.5	1690	0.15	5000	0.8	7.5	—	EEUEB2C331	50	—
200	22	10.0	20.0	470	0.15	5000	0.6	5.0	5.0	EEUEB2D220( )	200	500
	33	12.5	20.0	600	0.15	5000	0.6	5.0	5.0	EEUEB2D330( )	200	500
	47	12.5	20.0	600	0.15	5000	0.6	5.0	5.0	EEUEB2D470( )	200	500
	68	12.5	25.0	750	0.15	5000	0.6	5.0	5.0	EEUEB2D680( )	200	500
		16.0	20.0	750	0.15	5000	0.8	7.5	7.5	EEUEB2D680S( )	100	250
	100	16.0	25.0	1060	0.15	5000	0.8	7.5	7.5	EEUEB2D101( )	100	250
		18.0	20.0	1060	0.15	5000	0.8	7.5	7.5	EEUEB2D101S( )	100	250
	150	16.0	31.5	1280	0.15	5000	0.8	7.5	—	EEUEB2D151	100	—
		18.0	25.0	1280	0.15	5000	0.8	7.5	7.5	EEUEB2D151S( )	100	250
EOL	220	18.0	31.5	1690	0.15	5000	0.8	7.5	—	EEUEB2D221	50	—
250	22	12.5	20.0	560	0.15	5000	0.6	5.0	5.0	EEUEB2E220( )	200	500
	33	12.5	20.0	560	0.15	5000	0.6	5.0	5.0	EEUEB2E330( )	200	500
	47	12.5	25.0	710	0.15	5000	0.6	5.0	5.0	EEUEB2E470( )	200	500
		16.0	20.0	710	0.15	5000	0.8	7.5	7.5	EEUEB2E470S( )	100	250
	68	16.0	25.0	990	0.15	5000	0.8	7.5	7.5	EEUEB2E680( )	100	250
		18.0	20.0	990	0.15	5000	0.8	7.5	7.5	EEUEB2E680S( )	100	250
	100	16.0	31.5	1200	0.15	5000	0.8	7.5	—	EEUEB2E101	100	—
		18.0	25.0	1200	0.15	5000	0.8	7.5	7.5	EEUEB2E101S( )	100	250
EOL	150	18.0	31.5	1470	0.15	5000	0.8	7.5	—	EEUEB2E151	50	—
350	10	10.0	20.0	270	0.20	5000	0.6	5.0	5.0	EEUEB2V100( )	200	500
	22	12.5	20.0	350	0.20	5000	0.6	5.0	5.0	EEUEB2V220( )	200	500
	33	16.0	20.0	480	0.20	5000	0.8	7.5	7.5	EEUEB2V330S( )	100	250
	47	16.0	25.0	640	0.20	5000	0.8	7.5	7.5	EEUEB2V470( )	100	250
		18.0	20.0	640	0.20	5000	0.8	7.5	7.5	EEUEB2V470S( )	100	250
	68	16.0	31.5	780	0.20	5000	0.8	7.5	—	EEUEB2V680	100	—
		18.0	25.0	780	0.20	5000	0.8	7.5	7.5	EEUEB2V680S( )	100	250
EOL	100	18.0	31.5	970	0.20	5000	0.8	7.5	—	EEUEB2V101	50	—
400	10	10.0	20.0	250	0.24	5000	0.6	5.0	5.0	EEUEB2G100( )	200	500
	22	12.5	25.0	410	0.24	5000	0.6	5.0	5.0	EEUEB2G220( )	200	500
		16.0	20.0	410	0.24	5000	0.8	7.5	7.5	EEUEB2G220S( )	100	250
	33	16.0	25.0	600	0.24	5000	0.8	7.5	7.5	EEUEB2G330( )	100	250
		18.0	20.0	600	0.24	5000	0.8	7.5	7.5	EEUEB2G330S( )	100	250
	47	16.0	31.5	730	0.24	5000	0.8	7.5	—	EEUEB2G470	100	—
		18.0	25.0	730	0.24	5000	0.8	7.5	7.5	EEUEB2G470S( )	100	250
450	10	12.5	20.0	310	0.24	5000	0.6	5.0	5.0	EEUEB2W100( )	200	500
	22	16.0	25.0	560	0.24	5000	0.8	7.5	7.5	EEUEB2W220( )	100	250
		18.0	20.0	560	0.24	5000	0.8	7.5	7.5	EEUEB2W220S( )	100	250
	33	16.0	31.5	680	0.24	5000	0.8	7.5	—	EEUEB2W330( )	100	—
		18.0	25.0	680	0.24	5000	0.8	7.5	7.5	EEUEB2W330S( )	100	250
EOL	47	18.0	31.5	850	0.24	5000	0.8	7.5	—	EEUEB2W470	50	—

*1: Ripple current (100 kHz / +105 ℃)

*2: tan δ (120 Hz / +20 ℃)

EOL End of life

・When requesting taped product, please put the letter "B" be tween the "( )".
Lead wire pitch ✻B=5 mm.

・Please refer to the page of “Taping dimensions”.

Design and specifications are each subject to change without notice. Ask factory for the current technical specifications before purchase and/or use.
Should a safety concern arise regarding this product, please be sure to contact us immediately.

Panasonic INDUSTRY

⚠ Some part numbers are discontinued.

Aluminum Electrolytic Capacitors

Radial Lead Type

EE-A series

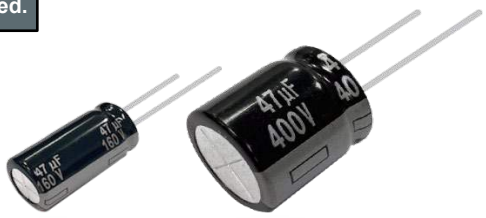

■ Not available in Japan

Features

- Endurance : 105 ℃ 8000 h to 10000 h
- High ripple current (at high frequency) : 40 % higher than ED series
- RoHS compliant

Specifications

Category temp. range	–25 ℃ to +105 ℃							
Rated voltage range	160 V to 450 V							
Capacitance range	10 µF to 330 µF							
Capacitance tolerance	±20 % (120 Hz / +20℃)							
Leakage current	I ≦ 0.06 CV +10 (µA) After 2 minutes							
Dissipation factor (tan δ)	Rated voltage (V)	160	200	250	350	400	450	(120 Hz /+20℃)
	Dissipation factor (tan δ)	0.15	0.15	0.15	0.20	0.24	0.24	
Endurance	After following life test with DC voltage and +105 ℃±2 ℃ ripple current value applied (The sum of DC and ripple peak voltage shall not exceed the rated working voltage), when the capacitors are restored to 20 ℃, the capacitors shall meet the limits specified bellow. ø10 : 8000 h ø12.5 to ø18 : 10000 h							
	Capacitance change	Within ±20 % of the initial value						
	Dissipation factor (tan δ)	≦ 200 % of the initial limit						
	DC leakage current	Within the initial limit						
Shelf life	After storage for 1000 h at +105 ℃±2 ℃ with no voltage applied and then being stabilized at +20 ℃, capacitors shall meet the limits specified in endurance. (With voltage treatment)							

Frequency correction factor for ripple current

Cap. (µF) \ Freq.(Hz)	60	120	300	1 k	10 k	100 k
10 to 82	0.25	0.35	0.50	0.65	0.90	1.00
100 to 330	0.30	0.40	0.55	0.70	0.90	1.00

Dimensions

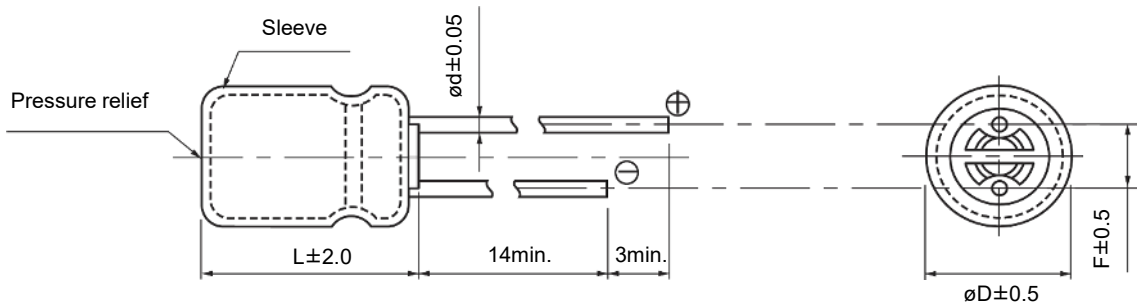

Unit : mm

øD	10.0	12.5	16.0	18.0
ød	0.6	0.6	0.8	0.8
F	5.0	5.0	7.5	7.5

Design and specifications are each subject to change without notice. Ask factory for the current technical specifications before purchase and/or use.
Should a safety concern arise regarding this product, please be sure to contact us immediately.

Case size / Ripple current

Capacitance (μF)	160 V			200 V		
	Case size (mm) (øD×L)	Ripple current (mA rms) (105 ℃)		Case size (mm) (øD×L)	Ripple current (mA rms) (105 ℃)	
		120 Hz	100 kHz		120 Hz	100 kHz
22	10 x 20	245	700	10 x 20	300	850
33	10 x 20	280	810	10 x 20	320	920
47	10 x 20	370	1065	12.5 x 20	385	1100
68	12.5 x 20	470	1350	12.5 x 25	465	1330
				16 x 20S	465	1330
82	12.5 x 25	520	1480	16 x 20S	510	1460
100	12.5 x 25	660	1660	16 x 25	690	1730
	16 x 20S	680	1700	18 x 20S	670	1665
150	16 x 25	755	1890	16 x 25	740	1860
	18 x 20S	730	1820			
220	16 x 31.5	910	2280	18 x 31.5	1175	2600
	18 x 25S	780	1950			
330	18 x 31.5	1040	2600	18 x 40	1250	3120

Capacitance (μF)	250 V			350 V		
	Case size (mm) (øD×L)	Ripple current (mA rms) (105 ℃)		Case size (mm) (øD×L)	Ripple current (mA rms) (105 ℃)	
		120 Hz	100 kHz		120 Hz	100 kHz
15	—			10 x 20	170	480
22	10 x 20	275	785	12.5 x 20	230	660
33	12.5 x 20	350	995	12.5 x 25	275	790
				16 x 20S	315	900
47	12.5 x 25	450	1290	16 x 25	375	1070
	16 x 20S	490	1400	18 x 20S	375	1070
68	16 x 20S	490	1400	16 x 31.5	535	1530
				18 x 25S	465	1330
82	16 x 25	590	1680	18 x 25S	535	1530
	18 x 20S	590	1680			
100	16 x 31.5	840	2100	18 x 31.5	640	1600
	18 x 25S	840	2100			
150	18 x 31.5	1010	2520	—	—	—
220	18 x 40	1175	2940	—	—	—

Capacitance (μF)	400 V			450 V		
	Case size (mm) (øD×L)	Ripple current (mA rms) (105 ℃)		Case size (mm) (øD×L)	Ripple current (mA rms) (105 ℃)	
		120 Hz	100 kHz		120 Hz	100 kHz
10	10 x 20	150	430	10 x 20U	115	330
				12.5 x 20	170	490
15	12.5 x 20	205	590	12.5 x 25	270	780
22	12.5 x 25	265	760	16 x 20S	330	945
	16 x 20S	300	860			
33	16 x 20S	355	1020	16 x 25	350	1000
				18 x 20S	350	1000
47	16 x 25	410	1180	16 x 31.5	420	1200
	18 x 20S	410	1180	18 x 25S	420	1200
56	—	—	—	18 x 31.5	480	1380
68	18 x 25	515	1470	18 x 40	630	1800
82	18 x 31.5	575	1645	—	—	—
100	18 x 40	825	2060	—	—	—

Design and specifications are each subject to change without notice. Ask factory for the current technical specifications before purchase and/or use.
Should a safety concern arise regarding this product, please be sure to contact us immediately.

Characteristics list

Endurance : 105 ℃ 8000 h / ø10, 105 ℃ 10000 h / ø12.5 to ø18

Rated voltage (V)	Capacitance (±20 %) (μF)	Case size (mm)		Specification			Lead length (mm)			Part No.	Min. Packaging Q'ty (PCS)	
								Lead space				
		øD	L	Ripple current*1 (mA rms)	tan δ*2	Endu-rance (h)	Lead dia. (ød)	Straight	Taping ✻B		Straight leads	Taping
160	22	10.0	20.0	700	0.15	8000	0.6	5.0	5.0	EEUEE2C220( )	200	500
	33	10.0	20.0	810	0.15	8000	0.6	5.0	5.0	EEUEE2C330( )	200	500
	47	10.0	20.0	1065	0.15	8000	0.6	5.0	5.0	EEUEE2C470( )	200	500
	68	12.5	20.0	1350	0.15	10000	0.6	5.0	5.0	EEUEE2C680( )	200	500
	82	12.5	25.0	1480	0.15	10000	0.6	5.0	5.0	EEUEE2C820( )	200	500
	100	12.5	25.0	1660	0.15	10000	0.6	5.0	5.0	EEUEE2C101( )	200	500
		16.0	20.0	1700	0.15	10000	0.8	7.5	7.5	EEUEE2C101S( )	100	250
	150	16.0	25.0	1890	0.15	10000	0.8	7.5	7.5	EEUEE2C151( )	100	250
		18.0	20.0	1820	0.15	10000	0.8	7.5	7.5	EEUEE2C151S( )	100	250
	220	16.0	31.5	2280	0.15	10000	0.8	7.5	—	EEUEE2C221	100	—
		18.0	25.0	1950	0.15	10000	0.8	7.5	7.5	EEUEE2C221S( )	100	250
EOL	330	18.0	31.5	2600	0.15	10000	0.8	7.5	—	EEUEE2C331	50	—
200	22	10.0	20.0	850	0.15	8000	0.6	5.0	5.0	EEUEE2D220( )	200	500
	33	10.0	20.0	920	0.15	8000	0.6	5.0	5.0	EEUEE2D330( )	200	500
	47	12.5	20.0	1100	0.15	10000	0.6	5.0	5.0	EEUEE2D470( )	200	500
	68	12.5	25.0	1330	0.15	10000	0.6	5.0	5.0	EEUEE2D680( )	200	500
		16.0	20.0	1330	0.15	10000	0.8	7.5	7.5	EEUEE2D680S( )	100	250
	82	16.0	20.0	1460	0.15	10000	0.8	7.5	7.5	EEUEE2D820S( )	100	250
	100	16.0	25.0	1730	0.15	10000	0.8	7.5	7.5	EEUEE2D101( )	100	250
		18.0	20.0	1665	0.15	10000	0.8	7.5	7.5	EEUEE2D101S( )	100	250
	150	16.0	25.0	1860	0.15	10000	0.8	7.5	7.5	EEUEE2D151( )	100	250
EOL	220	18.0	31.5	2600	0.15	10000	0.8	7.5	—	EEUEE2D221	50	—
EOL	330	18.0	40.0	3120	0.15	10000	0.8	7.5	—	EEUEE2D331	50	—
250	22	10.0	20.0	785	0.15	8000	0.6	5.0	5.0	EEUEE2E220( )	200	500
	33	12.5	20.0	995	0.15	10000	0.6	5.0	5.0	EEUEE2E330( )	200	500
	47	12.5	25.0	1290	0.15	10000	0.6	5.0	5.0	EEUEE2E470( )	200	500
		16.0	20.0	1400	0.15	10000	0.8	7.5	7.5	EEUEE2E470S( )	100	250
	68	16.0	20.0	1400	0.15	10000	0.8	7.5	7.5	EEUEE2E680S( )	100	250
	82	16.0	25.0	1680	0.15	10000	0.8	7.5	7.5	EEUEE2E820( )	100	250
		18.0	20.0	1680	0.15	10000	0.8	7.5	7.5	EEUEE2E820S( )	100	250
	100	16.0	31.5	2100	0.15	10000	0.8	7.5	—	EEUEE2E101	100	—
		18.0	25.0	2100	0.15	10000	0.8	7.5	7.5	EEUEE2E101S( )	100	250
EOL	150	18.0	31.5	2520	0.15	10000	0.8	7.5	—	EEUEE2E151	50	—
EOL	220	18.0	40.0	2940	0.15	10000	0.8	7.5	—	EEUEE2E221	50	—
350	15	10.0	20.0	480	0.20	8000	0.6	5.0	5.0	EEUEE2V150( )	200	500
	22	12.5	20.0	660	0.20	10000	0.6	5.0	5.0	EEUEE2V220( )	200	500
	33	12.5	25.0	790	0.20	10000	0.6	5.0	5.0	EEUEE2V330( )	200	500
		16.0	20.0	900	0.20	10000	0.8	7.5	7.5	EEUEE2V330S( )	100	250
	47	16.0	25.0	1070	0.20	10000	0.8	7.5	7.5	EEUEE2V470( )	100	250
		18.0	20.0	1070	0.20	10000	0.8	7.5	7.5	EEUEE2V470S( )	100	250
	68	16.0	31.5	1530	0.20	10000	0.8	7.5	—	EEUEE2V680	100	—
		18.0	25.0	1330	0.20	10000	0.8	7.5	7.5	EEUEE2V680S( )	100	250
	82	18.0	25.0	1530	0.20	10000	0.8	7.5	7.5	EEUEE2V820S( )	100	250
EOL	100	18.0	31.5	1600	0.20	10000	0.8	7.5	—	EEUEE2V101	50	—

*1: Ripple current (100 kHz / +105 ℃)

*2: tan δ (120 Hz / +20 ℃)

EOL End of life

・When requesting taped product, please put the letter "B" be tween the "( )".
Lead wire pitch ✻B=5 mm, 7.5 mm.

・Please refer to the page of “Taping dimensions”.

Design and specifications are each subject to change without notice. Ask factory for the current technical specifications before purchase and/or use.
Should a safety concern arise regarding this product, please be sure to contact us immediately.

Characteristics list

Endurance : 105 ℃ 8000 h / ø10, 105 ℃ 10000 h / ø12.5 to ø18

Rated voltage (V)	Capacitance (±20 %) (μF)	Case size (mm)		Specification			Lead length (mm)			Part No.	Min. Packaging Q'ty (PCS)	
								Lead space				
		øD	L	Ripple current*1 (mA rms)	tan δ*2	Endu-rance (h)	Lead dia. (ød)	Straight	Taping ✻B		Straight leads	Taping
400	10	10.0	20.0	430	0.24	8000	0.6	5.0	5.0	EEUEE2G100( )	200	500
	15	12.5	20.0	590	0.24	10000	0.6	5.0	5.0	EEUEE2G150( )	200	500
	22	12.5	25.0	760	0.24	10000	0.6	5.0	5.0	EEUEE2G220( )	200	500
		16.0	20.0	860	0.24	10000	0.8	7.5	7.5	EEUEE2G220S( )	100	250
	33	16.0	20.0	1020	0.24	10000	0.8	7.5	7.5	EEUEE2G330S( )	100	250
	47	16.0	25.0	1180	0.24	10000	0.8	7.5	7.5	EEUEE2G470( )	100	250
		18.0	20.0	1180	0.24	10000	0.8	7.5	7.5	EEUEE2G470S( )	100	250
	68	18.0	25.0	1470	0.24	10000	0.8	7.5	7.5	EEUEE2G680( )	100	250
EOL	82	18.0	31.5	1645	0.24	10000	0.8	7.5	—	EEUEE2G820	50	—
EOL	100	18.0	40.0	2060	0.24	10000	0.8	7.5	—	EEUEE2G101	50	—
450	10	10.0	20.0	330	0.24	8000	0.6	5.0	5.0	EEUEE2W100U( )	200	500
		12.5	20.0	490	0.24	10000	0.6	5.0	5.0	EEUEE2W100( )	200	500
	15	12.5	25.0	780	0.24	10000	0.6	5.0	5.0	EEUEE2W150( )	200	500
	22	16.0	20.0	945	0.24	10000	0.8	7.5	7.5	EEUEE2W220S( )	100	250
	33	16.0	25.0	1000	0.24	10000	0.8	7.5	7.5	EEUEE2W330( )	100	250
		18.0	20.0	1000	0.24	10000	0.8	7.5	7.5	EEUEE2W330S( )	100	250
	47	16.0	31.5	1200	0.24	10000	0.8	7.5	—	EEUEE2W470	100	—
		18.0	25.0	1200	0.24	10000	0.8	7.5	7.5	EEUEE2W470S( )	100	250
EOL	56	18.0	31.5	1380	0.24	10000	0.8	7.5	—	EEUEE2W560	50	—
EOL	68	18.0	40.0	1800	0.24	10000	0.8	7.5	—	EEUEE2W680	50	—

*1: Ripple current (100 kHz / +105 ℃)

*2: tan δ (120 Hz / +20 ℃)

EOL End of life

・When requesting taped product, please put the letter "B" be tween the "( )".
Lead wire pitch ✻B=5 mm, 7.5 mm.

・Please refer to the page of “Taping dimensions”.

Panasonic INDUSTRY

⚠ This Series is no longer available for purchase in the country of Japan.

Aluminum Electrolytic Capacitors

Radial Lead Type

TA-A series

Features

- Endurance : 125 ℃ 2000 h
- Heat cycle: 1000 cycle –40 ℃ to +125 ℃
- AEC-Q200 compliant
- RoHS compliant

Specifications

Category temp. range	–40 ℃ to +125 ℃							
Rated voltage range	10 V to 63 V							
Capacitance range	2.2 μF to 4700 μF							
Capacitance tolerance	±20 % (120 Hz / +20℃)							
Leakage current	I ≦ 0.01 CV or 3 (μA) After 2 minutes (Whichever is greater)							
Dissipation factor (tan δ)	Rated voltage（V）	10	16	25	35	50	63	(120 Hz /+20℃)
	Dissipation factor（tan δ）	0.20	0.16	0.14	0.12	0.10	0.09	
	For capacitance value ≧ 1000 μF , add 0.02 per every 1000 μF.							
Endurance	After following life test with DC voltage and +125 ℃±2 ℃ ripple current value applied (The sum of DC and ripple peak voltage shall not exceed the rated working voltage) for 2000 h, when the capacitors are restored to 20 ℃, the capacitors shall meet the limits specified bellow.							
	Capacitance change	Within ±30 % of the initial value						
	Dissipation factor (tan δ)	≦ 300 % of the initial limit						
	DC leakage current	Within the initial limit						
Shelf life	After storage for 1000 h at +125 ℃±2 ℃ with no voltage applied and then being stabilized at +20 ℃, capacitors shall meet the limits specified in endurance. (With voltage treatment)							

Frequency correction factor for ripple current

Freq.（Hz） / Cap.（μF）	60	120	1 k	10 k	100 k
2.2 to 330	0.55	0.65	0.85	0.90	1.00
470 to 1000	0.70	0.75	0.90	0.95	1.00
2200 to 4700	0.75	0.80	0.90	0.95	1.00

Dimensions

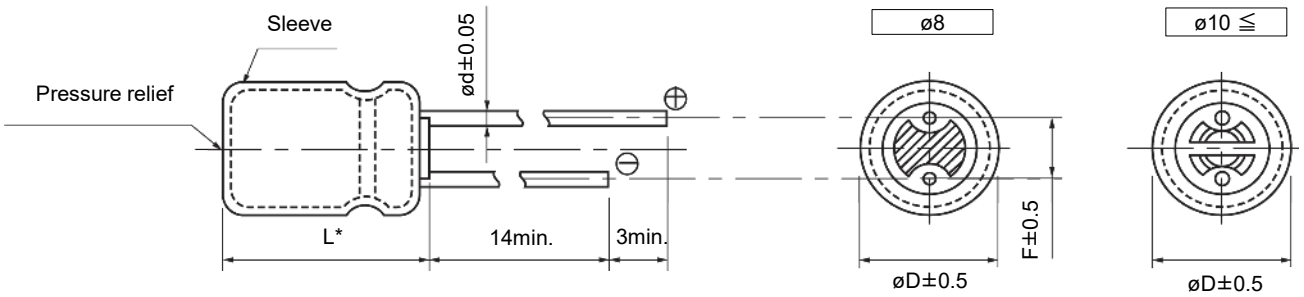

* L ≦ 16 : L±1.0（ø16x15, ø18x15 : L±1.5）
L ≧ 20 : L±2.0

Unit : mm

øD	8.0	10.0	12.5	16.0	18.0
ød	0.6	0.6	0.6	0.8	0.8
F	3.5	5.0	5.0	7.5	7.5

Design and specifications are each subject to change without notice. Ask factory for the current technical specifications before purchase and/or use.
Should a safety concern arise regarding this product, please be sure to contact us immediately.

Characteristics list

Endurance : 125 ℃ 2000 h

Rated voltage (V)	Capacitance (±20 %) (μF)	Case size (mm)		Specification		Lead length (mm)			Part No.	Min. Packaging Q'ty (PCS)	
							Lead space				
		øD	L	Ripple current*1 (mA rms)	Impe-dance*2 (Ω)	Lead dia. (ød)	Straight	Taping ✻B		Strai-ght leads	Taping
10	330	8.0	11.5	500	0.130	0.6	3.5	5.0	EEUTA1A331( )	200	1000
	470	10.0	12.5	680	0.100	0.6	5.0	5.0	EEUTA1A471( )	200	500
	1000	10.0	20.0	1100	0.057	0.6	5.0	5.0	EEUTA1A102( )	200	500
		12.5	15.0	1085	0.070	0.6	5.0	5.0	EEUTA1A102S( )	200	500
	2200	12.5	25.0	1750	0.033	0.6	5.0	5.0	EEUTA1A222L( )	200	500
		16.0	20.0	1985	0.032	0.8	7.5	7.5	EEUTA1A222( )	100	250
		18.0	15.0	1800	0.042	0.8	7.5	7.5	EEUTA1A222S( )	100	250
	3300	16.0	25.0	2300	0.024	0.8	7.5	7.5	EEUTA1A332( )	100	250
		18.0	20.0	2250	0.031	0.8	7.5	7.5	EEUTA1A332S( )	100	250
	4700	16.0	31.5	2710	0.020	0.8	7.5	—	EEUTA1A472	100	—
		18.0	25.0	2470	0.022	0.8	7.5	7.5	EEUTA1A472S( )	100	250
16	220	8.0	11.5	500	0.130	0.6	3.5	5.0	EEUTA1C221( )	200	1000
	330	10.0	12.5	680	0.100	0.6	5.0	5.0	EEUTA1C331( )	200	500
	470	10.0	16.0	945	0.075	0.6	5.0	5.0	EEUTA1C471( )	200	500
	1000	12.5	20.0	1490	0.042	0.6	5.0	5.0	EEUTA1C102( )	200	500
		16.0	15.0	1520	0.047	0.8	7.5	7.5	EEUTA1C102S( )	100	250
	2200	16.0	25.0	2300	0.024	0.8	7.5	7.5	EEUTA1C222( )	100	250
		18.0	20.0	2250	0.031	0.8	7.5	7.5	EEUTA1C222S( )	100	250
	3300	16.0	31.5	2710	0.020	0.8	7.5	—	EEUTA1C332	100	—
		18.0	25.0	2470	0.022	0.8	7.5	7.5	EEUTA1C332S( )	100	250
	4700	18.0	31.5	3270	0.018	0.8	7.5	—	EEUTA1C472	50	—
25	100	8.0	11.5	500	0.130	0.6	3.5	5.0	EEUTA1E101( )	200	1000
	220	10.0	12.5	680	0.100	0.6	5.0	5.0	EEUTA1E221( )	200	500
	330	10.0	16.0	945	0.075	0.6	5.0	5.0	EEUTA1E331( )	200	500
	470	10.0	20.0	1100	0.057	0.6	5.0	5.0	EEUTA1E471( )	200	500
		12.5	15.0	1085	0.070	0.6	5.0	5.0	EEUTA1E471S( )	200	500
	1000	12.5	25.0	1750	0.033	0.6	5.0	5.0	EEUTA1E102L( )	200	500
		16.0	20.0	1985	0.032	0.8	7.5	7.5	EEUTA1E102( )	100	250
		18.0	15.0	1800	0.042	0.8	7.5	7.5	EEUTA1E102S( )	100	250
	2200	16.0	31.5	2710	0.020	0.8	7.5	—	EEUTA1E222	100	—
		18.0	25.0	2470	0.022	0.8	7.5	7.5	EEUTA1E222S( )	100	250
	3300	18.0	35.5	3310	0.017	0.8	7.5	—	EEUTA1E332	50	—
35	100	10.0	12.5	555	0.180	0.6	5.0	5.0	EEUTA1V101( )	200	500
	220	10.0	16.0	765	0.130	0.6	5.0	5.0	EEUTA1V221( )	200	500
	330	10.0	20.0	930	0.100	0.6	5.0	5.0	EEUTA1V331( )	200	500
	470	12.5	20.0	1330	0.070	0.6	5.0	5.0	EEUTA1V471( )	200	500
		16.0	15.0	1450	0.088	0.8	7.5	7.5	EEUTA1V471S( )	100	250
	1000	16.0	25.0	2010	0.037	0.8	7.5	7.5	EEUTA1V102( )	100	250
		18.0	20.0	2180	0.046	0.8	7.5	7.5	EEUTA1V102S( )	100	250
	2200	18.0	35.5	2790	0.025	0.8	7.5	—	EEUTA1V222	50	—

*1: Ripple current (100 kHz / +125 ℃)
*2: Impedance (100 kHz / +20 ℃)
・When requesting taped product, please put the letter "B" be tween the "( )".
Lead wire pitch ✻B=5 mm, 7.5 mm.
・Please refer to the page of “Taping dimensions”.

Design and specifications are each subject to change without notice. Ask factory for the current technical specifications before purchase and/or use.
Should a safety concern arise regarding this product, please be sure to contact us immediately.

Characteristics list

Endurance : 125 ℃ 2000 h

Rated voltage (V)	Capacitance (±20 %) (μF)	Case size (mm)		Specification		Lead length (mm)			Part No.	Min. Packaging Q'ty (PCS)	
							Lead space				
		øD	L	Ripple current*1 (mA rms)	Impe-dance*2 (Ω)	Lead dia. (ød)	Straight	Taping ✻B		Strai-ght leads	Taping
50	10	8.0	11.5	180	0.950	0.6	3.5	5.0	EEUTA1H100( )	200	1000
	22	8.0	11.5	250	0.650	0.6	3.5	5.0	EEUTA1H220( )	200	1000
	33	8.0	11.5	300	0.450	0.6	3.5	5.0	EEUTA1H330( )	200	1000
	47	8.0	11.5	440	0.350	0.6	3.5	5.0	EEUTA1H470S( )	200	1000
	100	10.0	12.5	555	0.180	0.6	5.0	5.0	EEUTA1H101( )	200	500
	220	10.0	20.0	930	0.100	0.6	5.0	5.0	EEUTA1H221( )	200	500
	330	12.5	20.0	1330	0.070	0.6	5.0	5.0	EEUTA1H331( )	200	500
		16.0	15.0	1450	0.088	0.8	7.5	7.5	EEUTA1H331S( )	100	250
	470	12.5	25.0	1650	0.055	0.6	5.0	5.0	EEUTA1H471L( )	200	500
		16.0	20.0	1650	0.053	0.8	7.5	7.5	EEUTA1H471( )	100	250
		18.0	15.0	1710	0.075	0.8	7.5	7.5	EEUTA1H471S( )	100	250
	1000	16.0	31.5	2430	0.031	0.8	7.5	—	EEUTA1H102	100	—
		18.0	25.0	2350	0.032	0.8	7.5	7.5	EEUTA1H102S( )	100	250
63	22	8.0	11.5	310	0.470	0.6	3.5	5.0	EEUTA1J220( )	200	1000
	33	10.0	12.5	410	0.360	0.6	5.0	5.0	EEUTA1J330( )	200	500
	47	10.0	16.0	460	0.270	0.6	5.0	5.0	EEUTA1J470( )	200	500
	100	10.0	20.0	680	0.205	0.6	5.0	5.0	EEUTA1J101( )	200	500
	220	12.5	25.0	1325	0.100	0.6	5.0	5.0	EEUTA1J221L( )	200	500
		16.0	20.0	1360	0.085	0.8	7.5	7.5	EEUTA1J221( )	100	250
		18.0	15.0	1300	0.120	0.8	7.5	7.5	EEUTA1J221S( )	100	250
	330	16.0	25.0	1660	0.070	0.8	7.5	7.5	EEUTA1J331( )	100	250
		18.0	20.0	1760	0.077	0.8	7.5	7.5	EEUTA1J331S( )	100	250
	470	16.0	31.5	2055	0.060	0.8	7.5	—	EEUTA1J471	100	—
		18.0	25.0	1990	0.060	0.8	7.5	7.5	EEUTA1J471S( )	100	250

*1: Ripple current (100 kHz / +125 ℃)
*2: Impedance (100 kHz / +20 ℃)
・When requesting taped product, please put the letter "B" be tween the "( )".
Lead wire pitch ✻B=5 mm, 7.5 mm.
・Please refer to the page of “Taping dimensions”.

Panasonic INDUSTRY

⚠ This Series is no longer available for purchase in the country of Japan.

Aluminum Electrolytic Capacitors

Radial Lead Type

TP-A series

Features

- Endurance : 125 ℃ 2000 h to 5000 h or 135 ℃ 1000 h to 2000 h
- Smaller than series TA
- High ripple current (at high frequency) : 20 to 40% higher than TA series
- AEC-Q200 compliant
- RoHS compliant

Specifications

Category temp. range	–40 ℃ to +135 ℃			
Rated voltage range	25 V to 35 V			
Capacitance range	100 μF to 5100 μF			
Capacitance tolerance	±20 % (120 Hz / +20℃)			
Leakage current	I ≦ 0.01 CV (μA) After 2 minutes			
Dissipation factor（tan δ）	Rated voltage（V）	25	35	(120 Hz /+20℃)
	Dissipation factor（tan δ）	0.14	0.12	
	For capacitance value ≧ 1000 μF , add 0.02 per every 1000 μF.			
Endurance 1	After following life test with DC voltage and +125 ℃±2 ℃ ripple current value applied (The sum of DC and ripple peak voltage shall not exceed the rated working voltage)when the capacitors are restored to 20 ℃, the capacitors shall meet the limits specified bellow. Duration ø8 : 2000 h, ø10 : 3000 h, ø12.5 : 4000 h, ø16 to ø18 : 5000 h			
	Capacitance change	Within ±30 % of the initial value		
	Dissipation factor（tan δ）	≦ 300 % of the initial limit		
	DC leakage current	Within the initial limit		
Endurance 2	After following life test with DC voltage and +135 ℃±2 ℃ ripple current value applied (The sum of DC and ripple peak voltage shall not exceed the rated working voltage)when the capacitors are restored to 20 ℃, the capacitors shall meet the limits specified bellow. Duration ø8: 1000 h, ø10 to ø18: 2000 h			
	Capacitance change	Within ±30 % of the initial value		
	Dissipation factor（tan δ）	≦ 300 % of the initial limit		
	DC leakage current	Within the initial limit		
Shelf life 1	After storage for 1000 h at +125 ℃±2 ℃ with no voltage applied and then being stabilized at +20 ℃, capacitors shall meet the limits specified in endurance. (With voltage treatment)			
Shelf life 2	After storage for 1000 h at +135 ℃±2 ℃ with no voltage applied and then being stabilized at +20 ℃, capacitors shall meet the limits specified in endurance. (With voltage treatment)			

Frequency correction factor for ripple current

Cap. (μF) \ Freq. (Hz)	60	120	1 k	10 k	100 k
100 to 330	0.55	0.65	0.85	0.90	1.00
390 to 1000	0.70	0.75	0.90	0.95	1.00
1200 to 5100	0.75	0.80	0.90	0.95	1.00

Dimensions

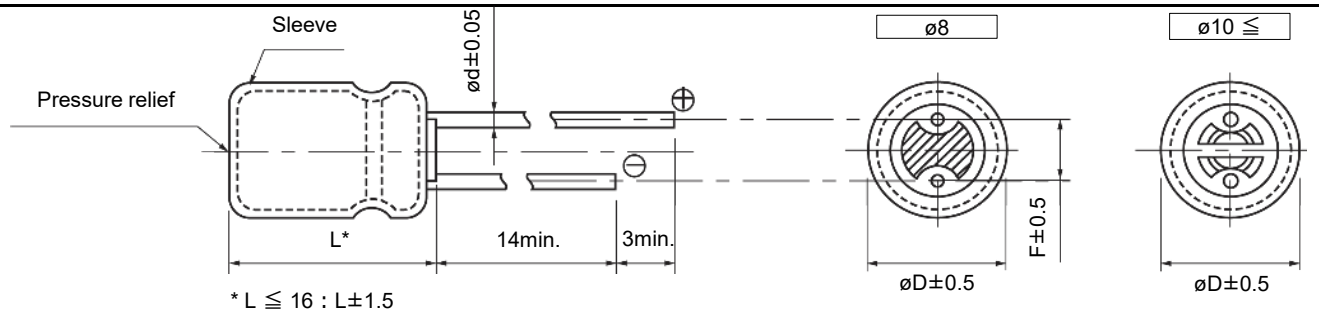

Unit : mm

øD	8.0	10.0	12.5	16.0	18.0
ød	0.6	0.6	0.6	0.8	0.8
F	3.5	5.0	5.0	7.5	7.5

Design and specifications are each subject to change without notice. Ask factory for the current technical specifications before purchase and/or use.
Should a safety concern arise regarding this product, please be sure to contact us immediately.

Characteristics list

Endurance : 125℃ 2000 h / ø8, 125℃ 3000 h / ø10, 125℃ 4000 h / ø12.5, 125℃ 5000 h / ø16 to ø18

Rated voltage (V)	Capacitance (±20 %) (μF)	Case size (mm)		Specification						Lead length (mm)			Part No. ★:Substandard (E24 series numbers)	Min. Packaging Q'ty (PCS)	
				Ripple current*1 (mA rms)		ESR*2 (Ω)	tan δ*3	Endurance (h)		Lead dia. (ød)	Lead space				
		øD	L	125℃	135℃			125℃	135℃		Straight	Taping ✻B		Straight leads	Taping
25	220	10.0	12.5	580	500	0.190	0.14	3000	2000	0.6	5.0	5.0	EEUTP1E221( )	200	500
	330	10.0	16.0	1100	945	0.130	0.14	3000	2000	0.6	5.0	5.0	EEUTP1E331( )	200	500
	470	8.0	20.0	1060	760	0.067	0.14	2000	1000	0.6	3.5	5.0	EEUTP1E471L( )	200	1000
		10.0	16.0	1100	945	0.130	0.14	3000	2000	0.6	5.0	5.0	EEUTP1E471( )	200	500
	510	10.0	16.0	1100	945	0.130	0.14	3000	2000	0.6	5.0	5.0	EEUTP1E511( )★	200	500
	820	10.0	20.0	1540	1100	0.052	0.14	3000	2000	0.6	5.0	5.0	EEUTP1E821( )	200	500
	1000	12.5	20.0	1860	1490	0.038	0.14	4000	2000	0.6	5.0	5.0	EEUTP1E102( )	200	500
	1200	12.5	20.0	1860	1490	0.038	0.14	4000	2000	0.6	5.0	5.0	EEUTP1E122( )	200	500
	1800	12.5	25.0	2180	1750	0.030	0.14	4000	2000	0.6	5.0	5.0	EEUTP1E182( )	200	500
		16.0	20.0	2380	1985	0.029	0.14	5000	2000	0.8	7.5	7.5	EEUTP1E182S( )	100	250
	2000	16.0	20.0	2380	1985	0.029	0.16	5000	2000	0.8	7.5	7.5	EEUTP1E202S( )★	100	250
	2200	16.0	25.0	2760	2300	0.022	0.16	5000	2000	0.8	7.5	7.5	EEUTP1E222( )	100	250
		18.0	20.0	2700	2250	0.028	0.16	5000	2000	0.8	7.5	7.5	EEUTP1E222S( )	100	250
	2700	16.0	25.0	2760	2300	0.022	0.16	5000	2000	0.8	7.5	7.5	EEUTP1E272( )	100	250
		18.0	20.0	2700	2250	0.028	0.16	5000	2000	0.8	7.5	7.5	EEUTP1E272S( )	100	250
	3300	16.0	31.5	3250	2710	0.018	0.18	5000	2000	0.8	7.5	—	EEUTP1E332	100	—
		18.0	25.0	2960	2470	0.020	0.18	5000	2000	0.8	7.5	7.5	EEUTP1E332S( )	100	250
	3900	16.0	31.5	3250	2710	0.018	0.18	5000	2000	0.8	7.5	—	EEUTP1E392	100	—
		18.0	25.0	2960	2470	0.020	0.18	5000	2000	0.8	7.5	7.5	EEUTP1E392S( )	100	250
	4700	18.0	31.5	3480	2900	0.016	0.20	5000	2000	0.8	7.5	—	EEUTP1E472	50	—
	5100	18.0	31.5	3480	2900	0.016	0.22	5000	2000	0.8	7.5	—	EEUTP1E512★	50	—
35	100	10.0	12.5	580	500	0.190	0.12	3000	2000	0.6	5.0	5.0	EEUTP1V101( )	200	500
	120	10.0	12.5	580	500	0.190	0.12	3000	2000	0.6	5.0	5.0	EEUTP1V121( )	200	500
	220	8.0	20.0	1060	760	0.067	0.12	2000	1000	0.6	3.5	5.0	EEUTP1V221L( )	200	1000
		10.0	16.0	1100	945	0.130	0.12	3000	2000	0.6	5.0	5.0	EEUTP1V221( )	200	500
	270	8.0	16.0	1060	760	0.067	0.12	2000	1000	0.6	3.5	5.0	EEUTP1V271L( )	200	1000
		10.0	16.0	1100	945	0.130	0.12	3000	2000	0.6	5.0	5.0	EEUTP1V271( )	200	500
	330	10.0	20.0	1540	1100	0.052	0.12	3000	2000	0.6	5.0	5.0	EEUTP1V331( )	200	500
	390	10.0	20.0	1540	1100	0.052	0.12	3000	2000	0.6	5.0	5.0	EEUTP1V391( )	200	500
	470	12.5	20.0	1860	1490	0.038	0.12	4000	2000	0.6	5.0	5.0	EEUTP1V471( )	200	500
	560	12.5	20.0	1860	1490	0.038	0.12	4000	2000	0.6	5.0	5.0	EEUTP1V561( )	200	500
	620	12.5	20.0	1860	1490	0.038	0.12	4000	2000	0.6	5.0	5.0	EEUTP1V621( )★	200	500
	820	12.5	25.0	2180	1750	0.030	0.12	4000	2000	0.6	5.0	5.0	EEUTP1V821( )	200	500
	1000	16.0	20.0	2380	1985	0.029	0.12	5000	2000	0.8	7.5	7.5	EEUTP1V102( )	100	250
	1200	16.0	20.0	2380	1985	0.029	0.12	5000	2000	0.8	7.5	7.5	EEUTP1V122( )	100	250
	1500	16.0	25.0	2760	2300	0.022	0.12	5000	2000	0.8	7.5	7.5	EEUTP1V152( )	100	250
		18.0	20.0	2700	2250	0.028	0.12	5000	2000	0.8	7.5	7.5	EEUTP1V152S( )	100	250
	1600	16.0	25.0	2760	2300	0.022	0.12	5000	2000	0.8	7.5	7.5	EEUTP1V162( )★	100	250
	1800	16.0	31.5	3250	2710	0.018	0.12	5000	2000	0.8	7.5	—	EEUTP1V182	100	—
		18.0	25.0	2960	2470	0.020	0.12	5000	2000	0.8	7.5	7.5	EEUTP1V182S( )	100	250
	2000	16.0	31.5	3250	2710	0.018	0.14	5000	2000	0.8	7.5	—	EEUTP1V202★	100	
		18.0	25.0	2960	2470	0.020	0.14	5000	2000	0.8	7.5	7.5	EEUTP1V202S( )★	100	250
	2200	18.0	31.5	3480	2900	0.016	0.14	5000	2000	0.8	7.5	—	EEUTP1V222	50	—
	2700	18.0	31.5	3480	2900	0.016	0.14	5000	2000	0.8	7.5	—	EEUTP1V272	50	—

*1: Ripple current (100 kHz / +125 ℃ or 135 ℃)
*2: ESR (100 kHz / +20 ℃)
*3: tan δ (120 Hz / +20 ℃)
・When requesting taped product, please put the letter "B" be tween the "( )".
Lead wire pitch ✻B=5 mm, 7.5 mm.
・Please refer to the page of “Taping dimensions”.

Panasonic INDUSTRY

⚠ This Series is no longer available for purchase in the country of Japan.

Aluminum Electrolytic Capacitors

Radial Lead Type

HD-A series

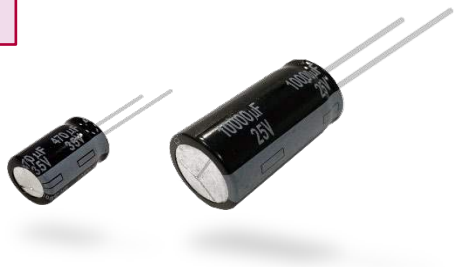

Features

- Endurance : 105 ℃ 1000 h to 2000 h
- Minaturize, Higher Capacitance : 1 Size miniturized product of current A-NHG
- AEC-Q200 compliant
- RoHS compliant

Specifications

Category temp. range	–55 ℃ to +105 ℃	
Rated voltage range	10 V to 50 V	
Capacitance range	2.2 μF to 22000 μF	
Capacitance tolerance	±20 % (120 Hz / +20℃)	
Leakage current	I ≦ 0.01 CV or 3 (μA) After 2 minutes (Whichever is greater)	
Dissipation factor (tan δ)	Please see the attached characteristics list	
Endurance	After following life test with DC voltage and +105 ℃±2 ℃ ripple current value applied (The sum of DC and ripple peak voltage shall not exceed the rated working voltage)when the capacitors are restored to 20 ℃, the capacitors shall meet the limits specified bellow. Duration ø5 to ø8 : 1000 h, ø10 to ø18 : 2000 h	
	Capacitance change	Within ±20 % of the initial value
	Dissipation factor (tan δ)	≦ 200 % of the initial limit
	DC leakage current	Within the initial limit
Shelf life	After storage for 1000 h at +105 ℃±2 ℃ with no voltage applied and then being stabilized at +20 °C, capacitors shall meet the limits specified in endurance. (With voltage treatment)	

Frequency correction factor for ripple current

Cap. (μF) \ Freq. (Hz)	60	120	1 k	10 k	100 k
2.2 to 33	0.75	1.00	1.55	1.80	2.00
47 to 470	0.80	1.00	1.35	1.50	1.50
1000 to 22000	0.85	1.00	1.10	1.15	1.15

Dimensions

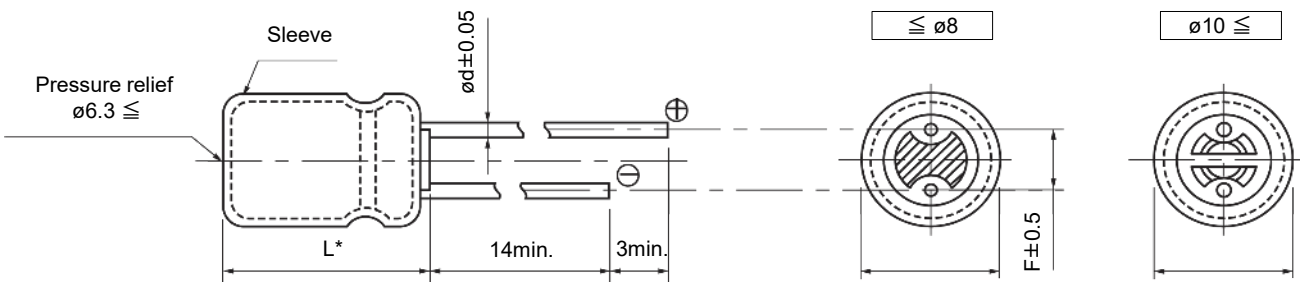

* L ≦ 16 : L±1.5
L ≧ 20 : L±2.0

Unit : mm

øD	5.0	6.3	8.0	10.0	12.5	16.0	18.0
ød	0.5	0.5	0.6	0.6	0.6	0.8	0.8
F	2.0	2.5	3.5	5.0	5.0	7.5	7.5

Design and specifications are each subject to change without notice. Ask factory for the current technical specifications before purchase and/or use.
Should a safety concern arise regarding this product, please be sure to contact us immediately.

Characteristics list

Endurance : 105 ℃ 1000 h / ø5 to ø8, 105 ℃ 2000 h / ø10 to ø18

Rated voltage (V)	Capacitance (±20 %) (μF)	Case size (mm)		Specification			Lead length (mm)				Part No.	Min. Packaging Q'ty (PCS)	
								Lead space					
		øD	L	Ripple current*1 (mA rms)	tan δ*2	Endu-rance (h)	Lead dia. (ød)	Straight	Taping ✻B	Taping ✻H		Straight leads	Taping
10	330	6.3	11.2	200	0.24	1000	0.5	2.5	5.0	2.5	EEUHD1A331( )	200	2000
	470	8.0	11.5	250	0.24	1000	0.6	3.5	5.0	—	EEUHD1A471( )	200	1000
	1000	10.0	12.5	460	0.24	2000	0.6	5.0	5.0	—	EEUHD1A102( )	200	500
	2200	10.0	16.0	760	0.26	2000	0.6	5.0	5.0	—	EEUHD1A222( )	200	500
	4700	12.5	20.0	1260	0.30	2000	0.6	5.0	5.0	—	EEUHD1A472( )	200	500
	6800	12.5	25.0	1570	0.34	2000	0.6	5.0	5.0	—	EEUHD1A682( )	200	500
	10000	16.0	25.0	1890	0.42	2000	0.8	7.5	7.5	—	EEUHD1A103( )	100	250
	15000	16.0	31.5	2180	0.52	2000	0.8	7.5	—	—	EEUHD1A153	100	—
	22000	18.0	35.5	2400	0.66	2000	0.8	7.5	—	—	EEUHD1A223	50	—
16	100	5.0	11.0	110	0.20	1000	0.5	2.0	5.0	2.5	EEUHD1C101( )	200	2000
	220	6.3	11.2	180	0.20	1000	0.5	2.5	5.0	2.5	EEUHD1C221( )	200	2000
	330	8.0	11.5	260	0.20	1000	0.6	3.5	5.0	—	EEUHD1C331( )	200	1000
	470	8.0	11.5	310	0.20	1000	0.6	3.5	5.0	—	EEUHD1C471( )	200	1000
	3300	12.5	20.0	1170	0.24	2000	0.6	5.0	5.0	—	EEUHD1C332( )	200	500
	4700	12.5	25.0	1480	0.26	2000	0.6	5.0	5.0	—	EEUHD1C472( )	200	500
	6800	16.0	25.0	1780	0.30	2000	0.8	7.5	7.5	—	EEUHD1C682( )	100	250
	8200	16.0	25.0	1780	0.34	2000	0.8	7.5	7.5	—	EEUHD1C822( )	100	250
	10000	16.0	31.5	2060	0.38	2000	0.8	7.5	—	—	EEUHD1C103	100	—
	15000	18.0	35.5	2210	0.48	2000	0.8	7.5	—	—	EEUHD1C153	50	—
25	47	5.0	11.0	91	0.16	1000	0.5	2.0	5.0	2.5	EEUHD1E470( )	200	2000
	68	5.0	11.0	91	0.16	1000	0.5	2.0	5.0	2.5	EEUHD1E680( )	200	2000
	100	6.3	11.2	130	0.16	1000	0.5	2.5	5.0	2.5	EEUHD1E101( )	200	2000
	220	8.0	11.5	230	0.16	1000	0.6	3.5	5.0	—	EEUHD1E221( )	200	1000
	330	8.0	11.5	310	0.16	1000	0.6	3.5	5.0	—	EEUHD1E331( )	200	1000
	470	10.0	12.5	380	0.16	2000	0.6	5.0	5.0	—	EEUHD1E471( )	200	500
	1000	10.0	16.0	680	0.16	2000	0.6	5.0	5.0	—	EEUHD1E102( )	200	500
	2200	12.5	20.0	1090	0.18	2000	0.6	5.0	5.0	—	EEUHD1E222( )	200	500
	3300	12.5	25.0	1400	0.20	2000	0.6	5.0	5.0	—	EEUHD1E332( )	200	500
	4700	16.0	25.0	1750	0.22	2000	0.8	7.5	7.5	—	EEUHD1E472( )	100	250
	5600	16.0	25.0	1750	0.24	2000	0.8	7.5	7.5	—	EEUHD1E562( )	100	250
	6800	16.0	31.5	2040	0.26	2000	0.8	7.5	—	—	EEUHD1E682	100	—
	10000	18.0	35.5	2200	0.34	2000	0.8	7.5	—	—	EEUHD1E103	50	—
35	47	5.0	11.0	90	0.14	1000	0.5	2.0	5.0	2.5	EEUHD1V470( )	200	2000
	100	6.3	11.2	150	0.14	1000	0.5	2.5	5.0	2.5	EEUHD1V101( )	200	2000
	220	8.0	11.5	270	0.14	1000	0.6	3.5	5.0	—	EEUHD1V221( )	200	1000
	330	10.0	12.5	350	0.14	2000	0.6	5.0	5.0	—	EEUHD1V331( )	200	500
	470	10.0	16.0	460	0.14	2000	0.6	5.0	5.0	—	EEUHD1V471( )	200	500
	680	10.0	16.0	460	0.14	2000	0.6	5.0	5.0	—	EEUHD1V681( )	200	500
	2200	12.5	25.0	1260	0.16	2000	0.6	5.0	5.0	—	EEUHD1V222( )	200	500
	3300	16.0	25.0	1610	0.18	2000	0.8	7.5	7.5	—	EEUHD1V332( )	100	250
	4700	16.0	31.5	1910	0.20	2000	0.8	7.5	—	—	EEUHD1V472	100	—
	6800	18.0	35.5	2050	0.24	2000	0.8	7.5	—	—	EEUHD1V682	50	—

*1: Ripple current (120 Hz / +105 ℃)
*2: tan δ (120 Hz / +20 ℃)
・When requesting taped product, please put the letter "B" or "H" be tween the "( )".
Lead wire pitch ✻B=5 mm, 7.5 mm, H=2.5 mm.
・Please refer to the page of “Taping dimensions”.

Design and specifications are each subject to change without notice. Ask factory for the current technical specifications before purchase and/or use.
Should a safety concern arise regarding this product, please be sure to contact us immediately.

Characteristics list

Endurance : 105 ℃ 1000 h / ø5 to ø8, 105 ℃ 2000 h / ø10 to ø18

Rated voltage (V)	Capacitance (±20 %) (μF)	Case size (mm)		Specification			Lead length (mm)				Part No.	Min. Packaging Q'ty (PCS)	
								Lead space					
		øD	L	Ripple current*1 (mA rms)	tan δ*2	Endu-rance (h)	Lead dia. (ød)	Straight	Taping ✻B	Taping ✻H		Straight leads	Taping
50	2.2	5.0	11.0	18	0.12	1000	0.5	2.0	5.0	2.5	EEUHD1H2R2( )	200	2000
	3.3	5.0	11.0	22	0.12	1000	0.5	2.0	5.0	2.5	EEUHD1H3R3( )	200	2000
	4.7	5.0	11.0	26	0.12	1000	0.5	2.0	5.0	2.5	EEUHD1H4R7( )	200	2000
	10	5.0	11.0	39	0.12	1000	0.5	2.0	5.0	2.5	EEUHD1H100( )	200	2000
	22	5.0	11.0	65	0.12	1000	0.5	2.0	5.0	2.5	EEUHD1H220( )	200	2000
	33	5.0	11.0	90	0.12	1000	0.5	2.0	5.0	2.5	EEUHD1H330( )	200	2000
	47	6.3	11.2	110	0.12	1000	0.5	2.5	5.0	2.5	EEUHD1H470( )	200	2000
	68	6.3	11.2	110	0.12	1000	0.5	2.5	5.0	2.5	EEUHD1H680( )	200	2000
	100	8.0	11.5	180	0.12	1000	0.6	3.5	5.0	—	EEUHD1H101( )	200	1000
	220	10.0	12.5	300	0.12	2000	0.6	5.0	5.0	—	EEUHD1H221( )	200	500
	330	10.0	16.0	410	0.12	2000	0.6	5.0	5.0	—	EEUHD1H331( )	200	500
	470	10.0	20.0	530	0.12	2000	0.6	5.0	5.0	—	EEUHD1H471( )	200	500
	560	16.0	15.0	650	0.12	2000	0.8	7.5	7.5	—	EEUHD1H561S( )	100	250
	680	16.0	15.0	650	0.12	2000	0.8	7.5	7.5	—	EEUHD1H681S( )	100	250
	1000	12.5	25.0	950	0.12	2000	0.6	5.0	5.0	—	EEUHD1H102( )	200	500
	2200	16.0	31.5	1470	0.14	2000	0.8	7.5	—	—	EEUHD1H222	100	—
	3300	18.0	35.5	1770	0.16	2000	0.8	7.5	—	—	EEUHD1H332	50	—

*1: Ripple current (120 Hz / +105 ℃)
*2: tan δ (120 Hz / +20 ℃)
・When requesting taped product, please put the letter "B" or "H" be tween the "( )".
Lead wire pitch ✻B=5 mm, 7.5 mm, H=2.5 mm.
・Please refer to the page of “Taping dimensions”.

Panasonic INDUSTRY

⚠ Some part numbers are discontinued.

Aluminum Electrolytic Capacitors

Radial Lead Type

NHG-A series

■ Not available in Japan

Features

- Endurance : 105 ℃ 1000 h to 2000 h
- AEC-Q200 compliant (6.3 V to 100 V)
- RoHS compliant

Specifications

Category temp. range	–55 ℃ to +105 ℃	–25 ℃ to +105 ℃
Rated voltage range	6.3 V to 100 V	160 V to 450 V
Capacitance range	2.2 μF to 22000 μF	2.2 μF to 330 μF
Capacitance tolerance	±20 % (120 Hz / +20℃)	
Leakage current	I ≦ 0.01 CV or 3 (μA) After 2 minutes (Which is greater)	I ≦ 0.06 CV + 10 (μA) After 2 minutes
Dissipation factor (tan δ)	Please see the attached characteristics list	
Endurance	After following life test with DC voltage and +105 ℃±2 ℃ ripple current value applied (The sum of DC and ripple peak voltage shall not exceed the rated working voltage) for 2000 h, when the capacitors are restored to 20 ℃, the capacitors shall meet the limits specified bellow. Duration 6.3 V to 100 V (ø5 to ø8) : 1000 h, (ø10 to ø18) : 2000 h 160 V to 450 V : 2000 h	
	Capacitance change	Within ±20 % of the initial value
	Dissipation factor (tan δ)	≦ 200 % of the initial limit
	DC leakage current	Within the initial limit
Shelf life	After storage for 1000 h at +105 ℃±2 ℃ with no voltage applied and then being stabilized at +20 ℃, capacitors shall meet the limits specified in endurance. (With voltage treatment)	

Frequency correction factor for ripple current

Rated voltage (V)	Capacitance (μF)	Frequency (Hz)				
		60	120	1 k	10 k	100 k
6.3 to 100	2.2 to 33	0.75	1.00	1.55	1.80	2.00
	47 to 470	0.80	1.00	1.35	1.50	1.50
	1000 to 22000	0.85	1.00	1.10	1.15	1.15
160 to 450	2.2 to 330	0.80	1.00	1.35	1.50	1.50

Dimensions

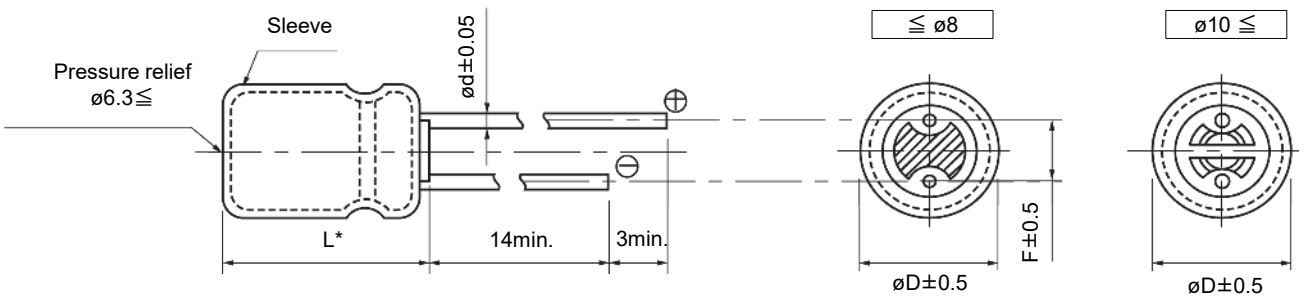

* L ≦ 16 : L±1.0
L ≧ 20 : L±2.0

Unit : mm

øD	5.0	6.3	8.0	10.0	12.5	16.0	18.0
ød	0.5	0.5	0.6	0.6	0.6	0.8	0.8
F	2.0	2.5	3.5	5.0	5.0	7.5	7.5

Design and specifications are each subject to change without notice. Ask factory for the current technical specifications before purchase and/or use.
Should a safety concern arise regarding this product, please be sure to contact us immediately.

Characteristics list

Endurance : 105 ℃ 1000 h to 2000 h

Rated voltage (V)	Capacitance (±20 %) (μF)	Case size (mm)		Specification			Lead length (mm)				Part No.	Min. Packaging Q'ty (PCS)	
								Lead space					
		øD	L	Ripple current*1 (mA rms)	tan δ*2	Endu-rance (h)	Lead dia. (ød)	Straight	Taping ✻B	Taping ✻i		Straight leads	Taping
6.3	100	5.0	11.0	91	0.28	1000	0.5	2.0	5.0	2.5	ECA0JHG101( )	200	2000
	220	5.0	11.0	140	0.28	1000	0.5	2.0	5.0	2.5	ECA0JHG221( )	200	2000
	470	6.3	11.2	230	0.28	1000	0.5	2.5	5.0	2.5	ECA0JHG471( )	200	2000
	1000	8.0	11.5	380	0.28	1000	0.6	3.5	5.0	—	ECA0JHG102( )	200	1000
	2200	10.0	16.0	710	0.30	2000	0.6	5.0	5.0	—	ECA0JHG222( )	200	500
	3300	10.0	20.0	840	0.32	2000	0.6	5.0	5.0	—	ECA0JHG332( )	200	500
	4700	12.5	20.0	1090	0.34	2000	0.6	5.0	5.0	—	ECA0JHG472( )	200	500
	6800	12.5	25.0	1350	0.38	2000	0.6	5.0	5.0	—	ECA0JHG682( )	200	500
	10000	16.0	25.0	1650	0.46	2000	0.8	7.5	7.5	—	ECA0JHG103( )	100	250
	15000	16.0	31.5	2010	0.56	2000	0.8	7.5	—	—	ECA0JHG153	100	—
	22000	18.0	35.5	2350	0.70	2000	0.8	7.5	—	—	ECA0JHG223	50	—
10	330	6.3	11.2	200	0.24	1000	0.5	2.5	5.0	2.5	ECA1AHG331( )	200	2000
	470	8.0	11.5	250	0.24	1000	0.6	3.5	5.0	—	ECA1AHG471( )	200	1000
	1000	10.0	12.5	460	0.24	2000	0.6	5.0	5.0	—	ECA1AHG102( )	200	500
	2200	10.0	20.0	760	0.26	2000	0.6	5.0	5.0	—	ECA1AHG222( )	200	500
	3300	12.5	20.0	1000	0.28	2000	0.6	5.0	5.0	—	ECA1AHG332( )	200	500
	4700	12.5	25.0	1260	0.30	2000	0.6	5.0	5.0	—	ECA1AHG472( )	200	500
	6800	16.0	25.0	1570	0.34	2000	0.8	7.5	7.5	—	ECA1AHG682( )	100	250
	10000	16.0	31.5	1890	0.42	2000	0.8	7.5	—	—	ECA1AHG103	100	—
	15000	18.0	35.5	2180	0.52	2000	0.8	7.5	—	—	ECA1AHG153	50	—
16	100	5.0	11.0	110	0.20	1000	0.5	2.0	5.0	2.5	ECA1CHG101( )	200	2000
	220	6.3	11.2	180	0.20	1000	0.5	2.5	5.0	2.5	ECA1CHG221( )	200	2000
	330	8.0	11.5	260	0.20	1000	0.6	3.5	5.0	—	ECA1CHG331( )	200	1000
	470	8.0	11.5	310	0.20	1000	0.6	3.5	5.0	—	ECA1CHG471( )	200	1000
	1000	10.0	16.0	560	0.20	2000	0.6	5.0	5.0	—	ECA1CHG102( )	200	500
	2200	12.5	20.0	920	0.22	2000	0.6	5.0	5.0	—	ECA1CHG222( )	200	500
	3300	12.5	25.0	1170	0.24	2000	0.6	5.0	5.0	—	ECA1CHG332( )	200	500
	4700	16.0	25.0	1480	0.26	2000	0.8	7.5	7.5	—	ECA1CHG472( )	100	250
	6800	16.0	31.5	1780	0.30	2000	0.8	7.5	—	—	ECA1CHG682	100	—
	10000	18.0	35.5	2060	0.38	2000	0.8	7.5	—	—	ECA1CHG103	50	—
25	47	5.0	11.0	91	0.16	1000	0.5	2.0	5.0	2.5	ECA1EHG470( )	200	2000
	100	6.3	11.2	130	0.16	1000	0.5	2.5	5.0	2.5	ECA1EHG101( )	200	2000
	220	8.0	11.5	230	0.16	1000	0.6	3.5	5.0	—	ECA1EHG221( )	200	1000
	330	8.0	11.5	310	0.16	1000	0.6	3.5	5.0	—	ECA1EHG331( )	200	1000
	470	10.0	12.5	380	0.16	2000	0.6	5.0	5.0	—	ECA1EHG471( )	200	500
	1000	10.0	20.0	680	0.16	2000	0.6	5.0	5.0	—	ECA1EHG102( )	200	500
	2200	12.5	25.0	1090	0.18	2000	0.6	5.0	5.0	—	ECA1EHG222( )	200	500
	3300	16.0	25.0	1400	0.20	2000	0.8	7.5	7.5	—	ECA1EHG332( )	100	250
	4700	16.0	31.5	1750	0.22	2000	0.8	7.5	—	—	ECA1EHG472	100	—
	6800	18.0	35.5	2040	0.26	2000	0.8	7.5	—	—	ECA1EHG682	50	—
35	47	5.0	11.0	90	0.14	1000	0.5	2.0	5.0	2.5	ECA1VHG470( )	200	2000
	100	6.3	11.2	150	0.14	1000	0.5	2.5	5.0	2.5	ECA1VHG101( )	200	2000
	220	8.0	11.5	270	0.14	1000	0.6	3.5	5.0	—	ECA1VHG221( )	200	1000
	330	10.0	12.5	350	0.14	2000	0.6	5.0	5.0	—	ECA1VHG331( )	200	500
	470	10.0	16.0	460	0.14	2000	0.6	5.0	5.0	—	ECA1VHG471( )	200	500
	1000	12.5	20.0	810	0.14	2000	0.6	5.0	5.0	—	ECA1VHG102( )	200	500
	2200	16.0	25.0	1260	0.16	2000	0.8	7.5	7.5	—	ECA1VHG222( )	100	250
	3300	16.0	31.5	1610	0.18	2000	0.8	7.5	—	—	ECA1VHG332	100	—
	4700	18.0	35.5	1910	0.20	2000	0.8	7.5	—	—	ECA1VHG472	50	—

*1: Ripple current (120 Hz / +105 ℃)
*2: tan δ (120 Hz / +20 ℃)
・When requesting taped product, please put the letter “B” or “i” between the “( )”.
Lead wire pitch ✻B=5 mm, 7.5 mm, i=2.5 mm.
・Please refer to the page of “Taping dimensions”.

Design and specifications are each subject to change without notice. Ask factory for the current technical specifications before purchase and/or use.
Should a safety concern arise regarding this product, please be sure to contact us immediately.

Characteristics list

Endurance : 105 ℃ 1000 h to 2000 h

Rated voltage (V)	Capacitance (±20 %) (μF)	Case size (mm)		Specification			Lead length (mm)				Part No.	Min. Packaging Q'ty (PCS)	
		øD	L	Ripple current*1 (mA rms)	tan δ*2	Endu-rance (h)	Lead dia. (ød)	Lead space: Straight	Lead space: Taping ✻B	Lead space: Taping ✻i		Straight leads	Taping
50	2.2	5.0	11.0	18	0.12	1000	0.5	2.0	5.0	2.5	ECA1HHG2R2( )	200	2000
	3.3	5.0	11.0	22	0.12	1000	0.5	2.0	5.0	2.5	ECA1HHG3R3( )	200	2000
	4.7	5.0	11.0	26	0.12	1000	0.5	2.0	5.0	2.5	ECA1HHG4R7( )	200	2000
	10	5.0	11.0	39	0.12	1000	0.5	2.0	5.0	2.5	ECA1HHG100( )	200	2000
	22	5.0	11.0	65	0.12	1000	0.5	2.0	5.0	2.5	ECA1HHG220( )	200	2000
	33	5.0	11.0	90	0.12	1000	0.5	2.0	5.0	2.5	ECA1HHG330( )	200	2000
	47	6.3	11.2	110	0.12	1000	0.5	2.5	5.0	2.5	ECA1HHG470( )	200	2000
	100	8.0	11.5	180	0.12	1000	0.6	3.5	5.0	—	ECA1HHG101( )	200	1000
	220	10.0	12.5	300	0.12	2000	0.6	5.0	5.0	—	ECA1HHG221( )	200	500
	330	10.0	16.0	410	0.12	2000	0.6	5.0	5.0	—	ECA1HHG331( )	200	500
	470	10.0	20.0	530	0.12	2000	0.6	5.0	5.0	—	ECA1HHG471( )	200	500
	1000	12.5	25.0	950	0.12	2000	0.6	5.0	5.0	—	ECA1HHG102( )	200	500
	2200	16.0	31.5	1470	0.14	2000	0.8	7.5	—	—	ECA1HHG222	100	—
	3300	18.0	35.5	1770	0.16	2000	0.8	7.5	—	—	ECA1HHG332	50	—
63	10	5.0	11.0	46	0.10	1000	0.5	2.0	5.0	2.5	ECA1JHG100( )	200	2000
	22	5.0	11.0	71	0.10	1000	0.5	2.0	5.0	2.5	ECA1JHG220( )	200	2000
	33	6.3	11.2	100	0.10	1000	0.5	2.5	5.0	2.5	ECA1JHG330( )	200	2000
	47	6.3	11.2	120	0.10	1000	0.5	2.5	5.0	2.5	ECA1JHG470( )	200	2000
	100	10.0	12.5	215	0.10	2000	0.6	5.0	5.0	—	ECA1JHG101( )	200	500
	220	10.0	16.0	335	0.10	2000	0.6	5.0	5.0	—	ECA1JHG221( )	200	500
	330	10.0	20.0	510	0.10	2000	0.6	5.0	5.0	—	ECA1JHG331( )	200	500
	470	12.5	20.0	640	0.10	2000	0.6	5.0	5.0	—	ECA1JHG471( )	200	500
	1000	16.0	25.0	930	0.10	2000	0.8	7.5	7.5	—	ECA1JHG102( )	100	250
	2200	18.0	35.5	1610	0.12	2000	0.8	7.5	—	—	ECA1JHG222	50	—
100	2.2	5.0	11.0	21	0.08	1000	0.5	2.0	5.0	2.5	ECA2AHG2R2( )	200	2000
	3.3	5.0	11.0	31	0.08	1000	0.5	2.0	5.0	2.5	ECA2AHG3R3( )	200	2000
	4.7	5.0	11.0	38	0.08	1000	0.5	2.0	5.0	2.5	ECA2AHG4R7( )	200	2000
	10	6.3	11.2	54	0.08	1000	0.5	2.5	5.0	2.5	ECA2AHG100( )	200	2000
	22	6.3	11.2	93	0.08	1000	0.5	2.5	5.0	2.5	ECA2AHG220( )	200	2000
	33	8.0	11.5	130	0.08	1000	0.6	3.5	5.0	—	ECA2AHG330( )	200	1000
	47	10.0	12.5	165	0.08	2000	0.6	5.0	5.0	—	ECA2AHG470( )	200	500
	100	10.0	20.0	265	0.08	2000	0.6	5.0	5.0	—	ECA2AHG101( )	200	500
	220	12.5	25.0	440	0.08	2000	0.6	5.0	5.0	—	ECA2AHG221( )	200	500
	330	16.0	25.0	540	0.08	2000	0.8	7.5	7.5	—	ECA2AHG331( )	100	250
	470	16.0	25.0	715	0.08	2000	0.8	7.5	7.5	—	ECA2AHG471( )	100	250
	1000	18.0	35.5	985	0.08	2000	0.8	7.5	—	—	ECA2AHG102	50	—

*1: Ripple current (120 Hz / +105 ℃)
*2: tan δ (120 Hz / +20 ℃)
・When requesting taped product, please put the letter “B” or “i” between the “( )”.
Lead wire pitch ✻B=5 mm, 7.5 mm, i=2.5 mm.
・Please refer to the page of “Taping dimensions”.

Design and specifications are each subject to change without notice. Ask factory for the current technical specifications before purchase and/or use.
Should a safety concern arise regarding this product, please be sure to contact us immediately.

Characteristics list

Endurance : 105 ℃ 2000 h

Rated voltage (V)	Capacitance (±20 %) (μF)	Case size (mm)		Specification			Lead length (mm)				Part No.	Min. Packaging Q'ty (PCS)	
								Lead space					
		øD	L	Ripple current*1 (mA rms)	tan δ*2	Endu-rance (h)	Lead dia. (ød)	Straight	Taping ✻B	Taping ✻i		Straight leads	Taping
160	2.2	6.3	11.2	25	0.15	2000	0.5	2.5	5.0	2.5	ECA2CHG2R2( )	200	2000
	3.3	6.3	11.2	36	0.15	2000	0.5	2.5	5.0	2.5	ECA2CHG3R3( )	200	2000
	4.7	6.3	11.2	43	0.15	2000	0.5	2.5	5.0	2.5	ECA2CHG4R7( )	200	2000
	10	10.0	12.5	70	0.15	2000	0.6	5.0	5.0	—	ECA2CHG100( )	200	500
	22	10.0	20.0	130	0.15	2000	0.6	5.0	5.0	—	ECA2CHG220( )	200	500
	33	10.0	20.0	180	0.15	2000	0.6	5.0	5.0	—	ECA2CHG330( )	200	500
	47	12.5	20.0	220	0.15	2000	0.6	5.0	5.0	—	ECA2CHG470( )	200	500
	100	16.0	25.0	335	0.15	2000	0.8	7.5	7.5	—	ECA2CHG101( )	100	250
	220	16.0	31.5	540	0.15	2000	0.8	7.5	—	—	ECA2CHG221	100	—
EOL	330	18.0	31.5	705	0.15	2000	0.8	7.5	—	—	ECA2CHG331	50	—
200	2.2	6.3	11.2	25	0.15	2000	0.5	2.5	5.0	2.5	ECA2DHG2R2( )	200	2000
	3.3	6.3	11.2	36	0.15	2000	0.5	2.5	5.0	2.5	ECA2DHG3R3( )	200	2000
	4.7	8.0	11.5	50	0.15	2000	0.6	3.5	5.0	—	ECA2DHG4R7( )	200	1000
	10	10.0	16.0	80	0.15	2000	0.6	5.0	5.0	—	ECA2DHG100( )	200	500
	22	10.0	20.0	140	0.15	2000	0.6	5.0	5.0	—	ECA2DHG220( )	200	500
	33	12.5	20.0	190	0.15	2000	0.6	5.0	5.0	—	ECA2DHG330( )	200	500
	47	12.5	20.0	220	0.15	2000	0.6	5.0	5.0	—	ECA2DHG470( )	200	500
	100	16.0	25.0	335	0.15	2000	0.8	7.5	7.5	—	ECA2DHG101( )	100	250
EOL	220	18.0	31.5	575	0.15	2000	0.8	7.5	—	—	ECA2DHG221	50	—
250	2.2	6.3	11.2	29	0.15	2000	0.5	2.5	5.0	2.5	ECA2EHG2R2( )	200	2000
	3.3	8.0	11.5	42	0.15	2000	0.6	3.5	5.0	—	ECA2EHG3R3	200	1000
	4.7	8.0	11.5	50	0.15	2000	0.6	3.5	5.0	—	ECA2EHG4R7( )	200	1000
	10	10.0	16.0	88	0.15	2000	0.6	5.0	5.0	—	ECA2EHG100( )	200	500
	22	12.5	20.0	155	0.15	2000	0.6	5.0	5.0	—	ECA2EHG220( )	200	500
	33	12.5	20.0	190	0.15	2000	0.6	5.0	5.0	—	ECA2EHG330( )	200	500
	47	12.5	25.0	230	0.15	2000	0.6	5.0	5.0	—	ECA2EHG470( )	200	500
	100	16.0	31.5	365	0.15	2000	0.8	7.5	—	—	ECA2EHG101	100	—
350	2.2	8.0	11.5	31	0.20	2000	0.6	3.5	5.0	—	ECA2VHG2R2( )	200	1000
	3.3	10.0	12.5	38	0.20	2000	0.6	5.0	5.0	—	ECA2VHG3R3( )	200	500
	4.7	10.0	16.0	50	0.20	2000	0.6	5.0	5.0	—	ECA2VHG4R7( )	200	500
	10	10.0	20.0	82	0.20	2000	0.6	5.0	5.0	—	ECA2VHG100( )	200	500
	22	12.5	20.0	130	0.20	2000	0.6	5.0	5.0	—	ECA2VHG220( )	200	500
	33	16.0	25.0	195	0.20	2000	0.8	7.5	7.5	—	ECA2VHG330( )	100	250
	47	16.0	25.0	230	0.20	2000	0.8	7.5	7.5	—	ECA2VHG470( )	100	250
EOL	100	18.0	31.5	375	0.20	2000	0.8	7.5	—	—	ECA2VHG101	50	—

*1: Ripple current (120 Hz / +105 ℃)
*2: tan δ (120 Hz / +20 ℃)

EOL End of life

・When requesting taped product, please put the letter “B” or “i” between the “( )”.
Lead wire pitch ✻B=5 mm, 7.5 mm, i=2.5 mm.
・Please refer to the page of “Taping dimensions”.

Design and specifications are each subject to change without notice. Ask factory for the current technical specifications before purchase and/or use.
Should a safety concern arise regarding this product, please be sure to contact us immediately.

Characteristics list

Endurance : 105 ℃ 2000 h

Rated voltage (V)	Capacitance (±20 %) (μF)	Case size (mm)		Specification			Lead length (mm)				Part No.	Min. Packaging Q'ty (PCS)	
								Lead space					
		øD	L	Ripple current*1 (mA rms)	tan δ*2	Endu-rance (h)	Lead dia. (ød)	Straight	Taping ✻B	Taping ✻i		Straight leads	Taping
400	2.2	8.0	11.5	30	0.24	2000	0.6	3.5	5.0	—	ECA2GHG2R2( )	200	1000
	3.3	10.0	12.5	40	0.24	2000	0.6	5.0	5.0	—	ECA2GHG3R3( )	200	500
	4.7	10.0	16.0	50	0.24	2000	0.6	5.0	5.0	—	ECA2GHG4R7( )	200	500
	10	10.0	20.0	80	0.24	2000	0.6	5.0	5.0	—	ECA2GHG100( )	200	500
	22	12.5	25.0	145	0.24	2000	0.6	5.0	5.0	—	ECA2GHG220( )	200	500
	33	16.0	25.0	195	0.24	2000	0.8	7.5	7.5	—	ECA2GHG330( )	100	250
	47	16.0	31.5	250	0.24	2000	0.8	7.5	—	—	ECA2GHG470	100	—
450	2.2	10.0	12.5	29	0.24	2000	0.6	5.0	5.0	—	ECA2WHG2R2( )	200	500
	3.3	10.0	16.0	41	0.24	2000	0.6	5.0	5.0	—	ECA2WHG3R3( )	200	500
	4.7	10.0	20.0	49	0.24	2000	0.6	5.0	5.0	—	ECA2WHG4R7( )	200	500
	10	12.5	20.0	75	0.24	2000	0.6	5.0	5.0	—	ECA2WHG100( )	200	500
	22	16.0	25.0	115	0.24	2000	0.8	7.5	7.5	—	ECA2WHG220( )	100	250
	33	16.0	31.5	155	0.24	2000	0.8	7.5	—	—	ECA2WHG330	100	—

*1: Ripple current (120 Hz / +105 ℃)
*2: tan δ (120 Hz / +20 ℃)
・When requesting taped product, please put the letter “B” or “i” between the “( )”.
Lead wire pitch ✻B=5 mm, 7.5 mm, i=2.5 mm.
・Please refer to the page of “Taping dimensions”.

Panasonic INDUSTRY

⚠ This Series is no longer available for purchase in the country of Japan.

Aluminum Electrolytic Capacitors

Radial Lead Type

GA-A (Bi-polar) series

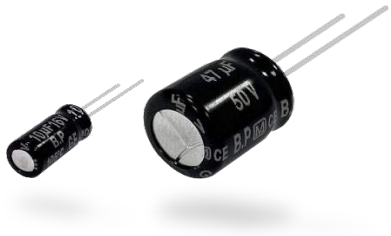

Features

- Endurance : 105 ℃ 1000 h to 2000 h
- RoHS compliant

Specifications

Category temp. range	–40 ℃ to +105 ℃	
Rated voltage range	6.3 V to 50 V	
Capacitance range	2.2 μF to 330 μF	
Capacitance tolerance	±20 % (120 Hz / +20℃)	
Leakage current	I ≦ 0.03 CV + 3 (μA) After 2 minutes or I ≦ 0.03 CV or 3 (μA) After 5 minutes (Whichever is greater)	
Dissipation factor (tan δ)	Please see the attached characteristics list	
Endurance	After following life test of DC working voltage at +105 ℃±2 ℃ when the capacitors are restored to 20 ℃, the capacitors shall meet the following limits. Duration ø5 to ø8 : 1000 h (500 h for each polarity) ø10 : 2000 h (1000 h for each polarity)	
	Capacitance change	Within ±20 % of the initial value
	Dissipation factor (tan δ)	≦ 200 % of the initial limit
	DC leakage current	Within the initial limit
Shelf life	After storage for 1000 h at +105 ℃±2 ℃ with no voltage applied and then being stabilized at +20 ℃, capacitors shall meet the limits specified in endurance. (With voltage treatment)	

Frequency correction factor for ripple current

Freq.(Hz) / Capacitance (μF)	50, 60	120	1 k	10 k to
2.2 to 330	0.70	1.00	1.30	1.70

Dimensions

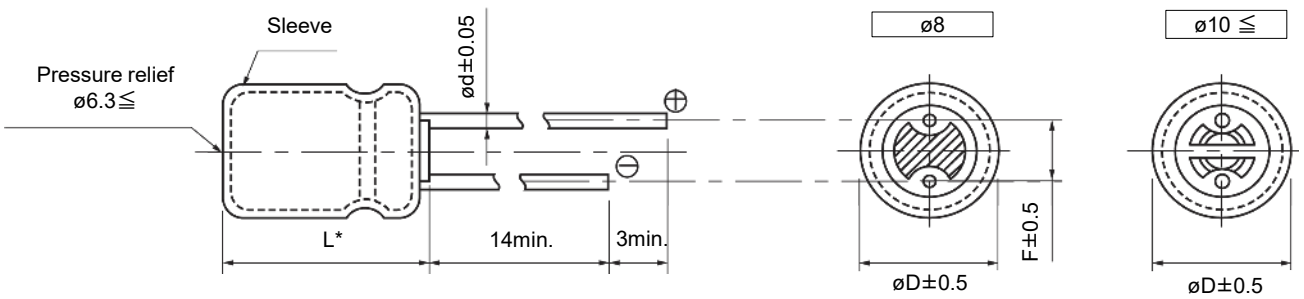

* L ≦ 16 : L±1.0
L ≧ 20 : L±2.0

Unit : mm

øD	5.0	6.3	8.0	10.0
ød	0.5	0.5	0.6	0.6
F	2.0	2.5	3.5	5.0

Design and specifications are each subject to change without notice. Ask factory for the current technical specifications before purchase and/or use.
Should a safety concern arise regarding this product, please be sure to contact us immediately.

Characteristics list

Endurance : 105 ℃ 1000 h / ø5 to ø8 (500 h for each polarity), 105 ℃ 2000 h / ø10 (1000 h for each polarity)

Rated voltage (V)	Capacitance (±20 %) (μF)	Case size (mm)		Specification		Lead length (mm)				Part No.	Min. Packaging Q'ty (PCS)	
							Lead space					
		øD	L	Ripple current*1 (mA rms)	tan δ*2	Lead dia. (ød)	Straight	Taping ✻B	Taping ✻i		Strai-ght leads	Taping
6.3	100	6.3	11.2	130	0.30	0.5	2.5	5.0	2.5	ECA0JEN101( )	200	2000
	330	8.0	11.5	250	0.30	0.6	3.5	5.0	—	ECA0JEN331( )	200	1000
10	47	5.0	11.0	90	0.24	0.5	2.0	5.0	2.5	ECA1AEN470( )	200	2000
16	10	5.0	11.0	40	0.20	0.5	2.0	5.0	2.5	ECA1CEN100( )	200	2000
	22	5.0	11.0	60	0.20	0.5	2.0	5.0	2.5	ECA1CEN220( )	200	2000
	33	5.0	11.0	80	0.20	0.5	2.0	5.0	2.5	ECA1CEN330( )	200	2000
	47	6.3	11.2	100	0.20	0.5	2.5	5.0	2.5	ECA1CEN470( )	200	2000
25	10	5.0	11.0	45	0.15	0.5	2.0	5.0	2.5	ECA1EEN100( )	200	2000
	22	6.3	11.2	60	0.15	0.5	2.5	5.0	2.5	ECA1EEN220( )	200	2000
	33	6.3	11.2	90	0.15	0.5	2.5	5.0	2.5	ECA1EEN330( )	200	2000
	47	6.3	11.2	110	0.15	0.5	2.5	5.0	2.5	ECA1EEN470( )	200	2000
	100	8.0	11.5	180	0.15	0.6	3.5	5.0	—	ECA1EEN101( )	200	1000
35	33	8.0	11.5	100	0.15	0.6	3.5	5.0	—	ECA1VEN330( )	200	1000
	100	10.0	16.0	230	0.15	0.6	5.0	5.0	—	ECA1VEN101( )	200	500
50	2.2	5.0	11.0	18	0.15	0.5	2.0	5.0	2.5	ECA1HEN2R2( )	200	2000
	3.3	5.0	11.0	25	0.15	0.5	2.0	5.0	2.5	ECA1HEN3R3( )	200	2000
	4.7	5.0	11.0	30	0.15	0.5	2.0	5.0	2.5	ECA1HEN4R7( )	200	2000
	10	6.3	11.2	50	0.15	0.5	2.5	5.0	2.5	ECA1HEN100( )	200	2000
	22	8.0	11.5	90	0.15	0.6	3.5	5.0	—	ECA1HEN220( )	200	1000
	33	8.0	11.5	110	0.15	0.6	3.5	5.0	—	ECA1HEN330( )	200	1000
	47	10.0	12.5	140	0.15	0.6	5.0	5.0	—	ECA1HEN470( )	200	500
	100	10.0	20.0	250	0.15	0.6	5.0	5.0	—	ECA1HEN101( )	200	500

*1: Ripple current (120 Hz / +105 ℃)
*2: tan δ (120 Hz / +20 ℃)
・When requesting taped product, please put the letter “B” or “i” between the "( )".
Lead wire pitch ✻B=5 mm, i=2.5mm.
・Please refer to the page of “Taping dimensions”.

Design and specifications are each subject to change without notice. Ask factory for the current technical specifications before purchase and/or use.
Should a safety concern arise regarding this product, please be sure to contact us immediately.

Panasonic INDUSTRY

⚠ Some part numbers are discontinued.

Aluminum Electrolytic Capacitors

Radial Lead Type

M-A series

■ Not available in Japan

Features

- Endurance : 85 ℃ 2000 h
- Smaller than series SU
- RoHS compliant

Specifications

Category temp. range	–40 ℃ to +85 ℃	–25 ℃ to +85 ℃
Rated voltage range	6.3 V to 100 V	160 V to 450 V
Capacitance range	2.2 μF to 22000 μF	2.2 μF to 470 μF
Capacitance tolerance	±20 % (120 Hz / +20℃)	
Leakage current	I ≦ 0.01 CV or 3 (μA) After 2 minutes (Which is greater)	I ≦ 0.06 CV + 10 (μA) After 2 minutes
Dissipation factor (tan δ)	Please see the attached characteristics list	
Endurance	After applying rated working voltage for 2000 hours at +85 °C±2 ℃, when the capacitors are restored to 20℃, capacitors shall meet the following limits.	
	Capacitance change	Within ±20 % of the initial value
	Dissipation factor (tan δ)	≦ 150 % of the initial limit
	DC leakage current	Within the initial limit
Shelf life	After storage for 1000 h at +85 ℃±2 ℃ with no voltage applied and then being stabilized at +20 °C, capacitors shall meet the limits specified in endurance. (With voltage treatment)	

Frequency correction factor for ripple current

Freq. (Hz) / Cap. (μF)	50, 60	120	1 k	10 k to
2.2 to 22000	0.70	1.00	1.30	1.70

Dimensions

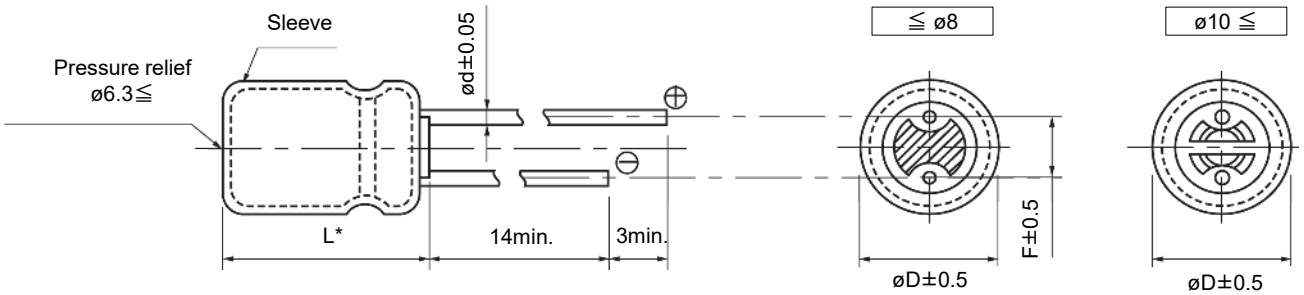

* L ≦ 16 : L±1.0
L ≧ 20 : L±2.0

Unit : mm

øD	5.0	6.3	8.0	10.0	12.5	16.0	18.0
ød	0.5	0.5	0.6	0.6	0.6	0.8	0.8
F	2.0	2.5	3.5	5.0	5.0	7.5	7.5

Design and specifications are each subject to change without notice. Ask factory for the current technical specifications before purchase and/or use.
Should a safety concern arise regarding this product, please be sure to contact us immediately.

Characteristics list

Endurance : 85 ℃ 2000 h

Rated voltage (V)	Capacitance (±20 %) (μF)	Case size (mm)		Specification		Lead length (mm)				Part No.	Min. Packaging Q'ty (PCS)	
		øD	L	Ripple current*1 (mA rms)	tan δ*2	Lead dia. (ød)	Lead space: Straight	Lead space: Taping ✻B	Lead space: Taping ✻i		Straight leads	Taping
6.3	220	5.0	11.0	240	0.28	0.5	2.0	5.0	2.5	ECA0JM221( )	200	2000
	470	6.3	11.2	380	0.28	0.5	2.5	5.0	2.5	ECA0JM471( )	200	2000
	1000	8.0	11.5	580	0.28	0.6	3.5	5.0	—	ECA0JM102( )	200	1000
	2200	10.0	16.0	890	0.30	0.6	5.0	5.0	—	ECA0JM222( )	200	500
	3300	10.0	20.0	1020	0.32	0.6	5.0	5.0	—	ECA0JM332( )	200	500
	4700	12.5	20.0	1170	0.34	0.6	5.0	5.0	—	ECA0JM472( )	200	500
	6800	12.5	25.0	1270	0.38	0.6	5.0	5.0	—	ECA0JM682( )	200	500
	10000	16.0	25.0	1450	0.46	0.8	7.5	7.5	—	ECA0JM103( )	100	250
	15000	16.0	31.5	1700	0.56	0.8	7.5	—	—	ECA0JM153	100	—
	22000	18.0	35.5	1900	0.70	0.8	7.5	—	—	ECA0JM223	50	—
10	330	6.3	11.2	330	0.24	0.5	2.5	5.0	2.5	ECA1AM331( )	200	2000
	1000	10.0	12.5	630	0.24	0.6	5.0	5.0	—	ECA1AM102( )	200	500
	2200	10.0	20.0	920	0.26	0.6	5.0	5.0	—	ECA1AM222( )	200	500
	3300	12.5	20.0	1090	0.28	0.6	5.0	5.0	—	ECA1AM332( )	200	500
	4700	12.5	25.0	1200	0.30	0.6	5.0	5.0	—	ECA1AM472( )	200	500
	6800	16.0	25.0	1400	0.34	0.8	7.5	7.5	—	ECA1AM682( )	100	250
	10000	16.0	31.5	1600	0.42	0.8	7.5	—	—	ECA1AM103	100	—
	15000	18.0	35.5	1850	0.52	0.8	7.5	—	—	ECA1AM153	50	—
16	10	5.0	11.0	30	0.20	0.5	2.0	5.0	2.5	ECA1CM100( )	200	2000
	22	5.0	11.0	75	0.20	0.5	2.0	5.0	2.5	ECA1CM220( )	200	2000
	33	5.0	11.0	110	0.20	0.5	2.0	5.0	2.5	ECA1CM330( )	200	2000
	47	5.0	11.0	130	0.20	0.5	2.0	5.0	2.5	ECA1CM470( )	200	2000
	100	5.0	11.0	180	0.20	0.5	2.0	5.0	2.5	ECA1CM101( )	200	2000
	220	6.3	11.2	280	0.20	0.5	2.5	5.0	2.5	ECA1CM221( )	200	2000
	470	8.0	11.5	440	0.20	0.6	3.5	5.0	—	ECA1CM471( )	200	1000
	1000	10.0	16.0	680	0.20	0.6	5.0	5.0	—	ECA1CM102( )	200	500
	2200	12.5	20.0	1000	0.22	0.6	5.0	5.0	—	ECA1CM222( )	200	500
	3300	12.5	25.0	1200	0.24	0.6	5.0	5.0	—	ECA1CM332( )	200	500
	4700	16.0	25.0	1360	0.26	0.8	7.5	7.5	—	ECA1CM472( )	100	250
	6800	16.0	31.5	1600	0.30	0.8	7.5	—	—	ECA1CM682	100	—
	10000	18.0	35.5	1800	0.38	0.8	7.5	—	—	ECA1CM103	50	—
25	100	6.3	11.2	180	0.16	0.5	2.5	5.0	2.5	ECA1EM101( )	200	2000
	330	8.0	11.5	390	0.16	0.6	3.5	5.0	—	ECA1EM331( )	200	1000
	470	10.0	12.5	480	0.16	0.6	5.0	5.0	—	ECA1EM471( )	200	500
	1000	10.0	20.0	850	0.16	0.6	5.0	5.0	—	ECA1EM102( )	200	500
	2200	12.5	25.0	1200	0.18	0.6	5.0	5.0	—	ECA1EM222( )	200	500
	3300	16.0	25.0	1300	0.20	0.8	7.5	7.5	—	ECA1EM332( )	100	250
	4700	16.0	31.5	1500	0.22	0.8	7.5	—	—	ECA1EM472	100	—
	6800	18.0	35.5	1750	0.26	0.8	7.5	—	—	ECA1EM682	50	—

*1: Ripple current (120 Hz / +85 ℃)
*2: tan δ (120 Hz / +20 ℃)
・When requesting taped product, please put the letter “B” or “i” between the “( )”.
Lead wire pitch ✻B=5 mm, 7.5 mm, i=2.5 mm
・Please refer to the page of “Taping dimensions”.

Design and specifications are each subject to change without notice. Ask factory for the current technical specifications before purchase and/or use.
Should a safety concern arise regarding this product, please be sure to contact us immediately.

Characteristics list

Endurance : 85 ℃ 2000 h

Rated voltage (V)	Capacitance (±20 %) (μF)	Case size (mm)		Specification		Lead length (mm)				Part No.	Min. Packaging Q'ty (PCS)	
							Lead space					
		øD	L	Ripple current*1 (mA rms)	tan δ*2	Lead dia. (ød)	Straight	Taping ✻B	Taping ✻i		Straight leads	Taping
35	10	5.0	11.0	60	0.12	0.5	2.0	5.0	2.5	ECA1VM100( )	200	2000
	47	5.0	11.0	130	0.14	0.5	2.0	5.0	2.5	ECA1VM470( )	200	2000
	100	6.3	11.2	210	0.14	0.5	2.5	5.0	2.5	ECA1VM101( )	200	2000
	220	8.0	11.5	350	0.14	0.6	3.5	5.0	—	ECA1VM221( )	200	1000
	330	10.0	12.5	440	0.14	0.6	5.0	5.0	—	ECA1VM331( )	200	500
	470	10.0	16.0	550	0.14	0.6	5.0	5.0	—	ECA1VM471( )	200	500
	1000	12.5	20.0	900	0.14	0.6	5.0	5.0	—	ECA1VM102( )	200	500
	2200	16.0	25.0	1250	0.16	0.8	7.5	7.5	—	ECA1VM222( )	100	250
	3300	16.0	31.5	1400	0.18	0.8	7.5	—	—	ECA1VM332	100	—
	4700	18.0	35.5	1600	0.20	0.8	7.5	—	—	ECA1VM472	50	—
50	2.2	5.0	11.0	20	0.12	0.5	2.0	5.0	2.5	ECA1HM2R2( )	200	2000
	3.3	5.0	11.0	35	0.12	0.5	2.0	5.0	2.5	ECA1HM3R3( )	200	2000
	4.7	5.0	11.0	45	0.12	0.5	2.0	5.0	2.5	ECA1HM4R7( )	200	2000
	10	5.0	11.0	65	0.12	0.5	2.0	5.0	2.5	ECA1HM100( )	200	2000
	22	5.0	11.0	100	0.12	0.5	2.0	5.0	2.5	ECA1HM220( )	200	2000
	33	5.0	11.0	110	0.12	0.5	2.0	5.0	2.5	ECA1HM330( )	200	2000
	47	6.3	11.2	130	0.12	0.5	2.5	5.0	2.5	ECA1HM470( )	200	2000
	100	8.0	11.5	250	0.12	0.6	3.5	5.0	—	ECA1HM101( )	200	1000
	220	10.0	12.5	400	0.12	0.6	5.0	5.0	—	ECA1HM221( )	200	500
	330	10.0	16.0	500	0.12	0.6	5.0	5.0	—	ECA1HM331( )	200	500
	470	10.0	20.0	650	0.12	0.6	5.0	5.0	—	ECA1HM471( )	200	500
	1000	12.5	25.0	1050	0.12	0.6	5.0	5.0	—	ECA1HM102( )	200	500
	2200	16.0	31.5	1300	0.14	0.8	7.5	—	—	ECA1HM222	100	—
	3300	18.0	35.5	1500	0.16	0.8	7.5	—	—	ECA1HM332	50	—
63	10	5.0	11.0	70	0.11	0.5	2.0	5.0	2.5	ECA1JM100( )	200	2000
	22	5.0	11.0	105	0.11	0.5	2.0	5.0	2.5	ECA1JM220( )	200	2000
	33	6.3	11.2	130	0.11	0.5	2.5	5.0	2.5	ECA1JM330( )	200	2000
	47	6.3	11.2	160	0.11	0.5	2.5	5.0	2.5	ECA1JM470( )	200	2000
	100	8.0	11.5	270	0.11	0.6	3.5	5.0	—	ECA1JM101( )	200	1000
	220	10.0	16.0	450	0.11	0.6	5.0	5.0	—	ECA1JM221( )	200	500
	330	10.0	20.0	550	0.11	0.6	5.0	5.0	—	ECA1JM331( )	200	500
	470	12.5	20.0	750	0.11	0.6	5.0	5.0	—	ECA1JM471( )	200	500
	1000	16.0	25.0	1100	0.11	0.8	7.5	7.5	—	ECA1JM102( )	100	250
	2200	18.0	35.5	1400	0.13	0.8	7.5	—	—	ECA1JM222	50	—

*1: Ripple current (120 Hz / +85 ℃)
*2: tan δ (120 Hz / +20 ℃)
・When requesting taped product, please put the letter “B” or “i” between the “( )”.
Lead wire pitch ✻B=5 mm, 7.5 mm, i=2.5 mm
・Please refer to the page of “Taping dimensions”.

Design and specifications are each subject to change without notice. Ask factory for the current technical specifications before purchase and/or use.
Should a safety concern arise regarding this product, please be sure to contact us immediately.

Characteristics list

Endurance : 85 ℃ 2000 h

Rated voltage (V)	Capacitance (±20 %) (μF)	Case size (mm)		Specification		Lead length (mm)				Part No.	Min. Packaging Q'ty (PCS)	
							Lead space					
		øD	L	Ripple current*1 (mA rms)	tan δ*2	Lead dia. (ød)	Straight	Taping ✻B	Taping ✻i		Strai-ght leads	Taping
100	2.2	5.0	11.0	30	0.10	0.5	2.0	5.0	2.5	ECA2AM2R2( )	200	2000
	3.3	5.0	11.0	40	0.10	0.5	2.0	5.0	2.5	ECA2AM3R3( )	200	2000
	4.7	5.0	11.0	50	0.10	0.5	2.0	5.0	2.5	ECA2AM4R7( )	200	2000
	10	5.0	11.0	70	0.10	0.5	2.0	5.0	2.5	ECA2AM100( )	200	2000
	22	6.3	11.2	115	0.10	0.5	2.5	5.0	2.5	ECA2AM220( )	200	2000
	33	8.0	11.5	145	0.10	0.6	3.5	5.0	—	ECA2AM330( )	200	1000
	47	8.0	11.5	180	0.10	0.6	3.5	5.0	—	ECA2AM470( )	200	1000
	100	10.0	16.0	350	0.10	0.6	5.0	5.0	—	ECA2AM101( )	200	500
	220	12.5	20.0	550	0.10	0.6	5.0	5.0	—	ECA2AM221( )	200	500
	330	12.5	25.0	700	0.10	0.6	5.0	5.0	—	ECA2AM331( )	200	500
	470	16.0	25.0	900	0.10	0.8	7.5	7.5	—	ECA2AM471( )	100	250
	1000	18.0	35.5	1300	0.10	0.8	7.5	—	—	ECA2AM102	50	—
160	2.2	6.3	11.2	53	0.16	0.5	2.5	5.0	2.5	ECA2CM2R2( )	200	2000
	3.3	6.3	11.2	66	0.16	0.5	2.5	5.0	2.5	ECA2CM3R3( )	200	2000
	4.7	6.3	11.2	78	0.16	0.5	2.5	5.0	2.5	ECA2CM4R7( )	200	2000
	10	10.0	12.5	105	0.16	0.6	5.0	5.0	—	ECA2CM100( )	200	500
	22	10.0	16.0	175	0.16	0.6	5.0	5.0	—	ECA2CM220( )	200	500
	33	10.0	20.0	235	0.16	0.6	5.0	5.0	—	ECA2CM330( )	200	500
	47	12.5	20.0	320	0.16	0.6	5.0	5.0	—	ECA2CM470( )	200	500
	100	12.5	25.0	515	0.16	0.6	5.0	5.0	—	ECA2CM101( )	200	500
	220	16.0	31.5	830	0.16	0.8	7.5	—	—	ECA2CM221	100	—
EOL	330	18.0	31.5	1090	0.16	0.8	7.5	—	—	ECA2CM331	50	—
EOL	470	18.0	40.0	1440	0.16	0.8	7.5	—	—	ECA2CM471	50	—
200	2.2	6.3	11.2	50	0.18	0.5	2.5	5.0	2.5	ECA2DM2R2( )	200	2000
	3.3	6.3	11.2	62	0.18	0.5	2.5	5.0	2.5	ECA2DM3R3( )	200	2000
	4.7	8.0	11.5	86	0.18	0.6	3.5	5.0	—	ECA2DM4R7( )	200	1000
	10	10.0	12.5	100	0.18	0.6	5.0	5.0	—	ECA2DM100( )	200	500
	22	10.0	20.0	180	0.18	0.6	5.0	5.0	—	ECA2DM220( )	200	500
	33	10.0	20.0	220	0.18	0.6	5.0	5.0	—	ECA2DM330( )	200	500
	47	12.5	20.0	300	0.18	0.6	5.0	5.0	—	ECA2DM470( )	200	500
	100	16.0	25.0	475	0.18	0.8	7.5	7.5	—	ECA2DM101( )	100	250
EOL	220	18.0	31.5	835	0.18	0.8	7.5	—	—	ECA2DM221	50	—
EOL	330	18.0	40.0	1140	0.18	0.8	7.5	—	—	ECA2DM331	50	—

*1: Ripple current (120 Hz / +85 ℃)

*2: tan δ (120 Hz / +20 ℃)

EOL End of life

・When requesting taped product, please put the letter “B” or “i” between the “( )”.
Lead wire pitch ✻B=5 mm, 7.5 mm, i=2.5 mm

・Please refer to the page of “Taping dimensions”.

Design and specifications are each subject to change without notice. Ask factory for the current technical specifications before purchase and/or use.
Should a safety concern arise regarding this product, please be sure to contact us immediately.

Characteristics list

Endurance : 85 ℃ 2000 h

Rated voltage (V)	Capacitance (±20 %) (μF)	Case size (mm)		Specification		Lead length (mm)				Part No.	Min. Packaging Q'ty (PCS)	
							Lead space					
		øD	L	Ripple current*1 (mA rms)	tan δ*2	Lead dia. (ød)	Straight	Taping ✻B	Taping ✻i		Strai-ght leads	Taping
250	2.2	6.3	11.2	50	0.18	0.5	2.5	5.0	2.5	ECA2EM2R2( )	200	2000
	3.3	8.0	11.5	72	0.18	0.6	3.5	5.0	—	ECA2EM3R3( )	200	1000
	4.7	8.0	11.5	86	0.18	0.6	3.5	5.0	—	ECA2EM4R7( )	200	1000
	10	10.0	16.0	110	0.18	0.6	5.0	5.0	—	ECA2EM100( )	200	500
	22	10.0	20.0	180	0.18	0.6	5.0	5.0	—	ECA2EM220( )	200	500
	33	12.5	20.0	250	0.18	0.6	5.0	5.0	—	ECA2EM330( )	200	500
	47	12.5	25.0	330	0.18	0.6	5.0	5.0	—	ECA2EM470( )	200	500
	100	16.0	31.5	530	0.18	0.8	7.5	—	—	ECA2EM101	100	—
	EOL 220	18.0	40.0	930	0.18	0.8	7.5	—	—	ECA2EM221	50	—
350	2.2	8.0	11.5	55	0.20	0.6	3.5	5.0	—	ECA2VM2R2( )	200	1000
	3.3	8.0	11.5	60	0.20	0.6	3.5	5.0	—	ECA2VM3R3( )	200	1000
	4.7	10.0	12.5	65	0.20	0.6	5.0	5.0	—	ECA2VM4R7( )	200	500
	10	10.0	20.0	115	0.20	0.6	5.0	5.0	—	ECA2VM100( )	200	500
	22	12.5	20.0	195	0.20	0.6	5.0	5.0	—	ECA2VM220( )	200	500
	33	16.0	25.0	300	0.20	0.8	7.5	7.5	—	ECA2VM330( )	100	250
	47	16.0	25.0	325	0.20	0.8	7.5	7.5	—	ECA2VM470( )	100	250
	EOL 100	18.0	31.5	535	0.20	0.8	7.5	—	—	ECA2VM101	50	—
400	2.2	8.0	11.5	50	0.20	0.6	3.5	5.0	—	ECA2GM2R2( )	200	1000
	3.3	10.0	12.5	54	0.20	0.6	5.0	5.0	—	ECA2GM3R3( )	200	500
	4.7	10.0	16.0	72	0.20	0.6	5.0	5.0	—	ECA2GM4R7( )	200	500
	10	10.0	20.0	115	0.20	0.6	5.0	5.0	—	ECA2GM100( )	200	500
	22	12.5	25.0	215	0.20	0.6	5.0	5.0	—	ECA2GM220( )	200	500
	33	16.0	25.0	275	0.20	0.8	7.5	7.5	—	ECA2GM330( )	100	250
	47	16.0	31.5	350	0.20	0.8	7.5	—	—	ECA2GM470	100	—
	EOL 100	18.0	40.0	600	0.20	0.8	7.5	—	—	ECA2GM101	50	—
450	2.2	10.0	12.5	44	0.20	0.6	5.0	5.0	—	ECA2WM2R2( )	200	500
	3.3	10.0	16.0	60	0.20	0.6	5.0	5.0	—	ECA2WM3R3( )	200	500
	4.7	10.0	20.0	79	0.20	0.6	5.0	5.0	—	ECA2WM4R7( )	200	500
	10	12.5	20.0	130	0.20	0.6	5.0	5.0	—	ECA2WM100( )	200	500
	22	16.0	25.0	210	0.20	0.8	7.5	7.5	—	ECA2WM220( )	100	250
	33	16.0	31.5	285	0.20	0.8	7.5	—	—	ECA2WM330	100	—

*1: Ripple current (120 Hz / +85 ℃)

*2: tan δ (120 Hz / +20 ℃)

EOL End of life

・When requesting taped product, please put the letter “B” or “i” between the “( )”.
Lead wire pitch ✻B=5 mm, 7.5 mm, i=2.5 mm

・Please refer to the page of “Taping dimensions”.

Design and specifications are each subject to change without notice. Ask factory for the current technical specifications before purchase and/or use.
Should a safety concern arise regarding this product, please be sure to contact us immediately.

Panasonic INDUSTRY

This Series is no longer available for purchase in the country of Japan.

Aluminum Electrolytic Capacitors

Radial Lead Type

SU-A (Bi-polar) series

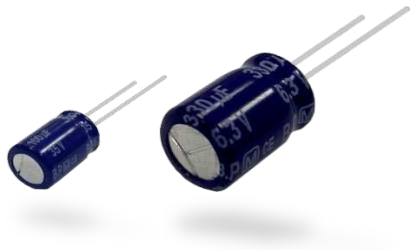

Features

- Endurance : 85 ℃ 2000 h
- RoHS compliant

Specifications

Category temp. range	–40 ℃ to +85 ℃	
Rated voltage range	6.3 V to 50 V	
Capacitance range	2.2 μF to 6800 μF	
Capacitance tolerance	±20 % (120 Hz / +20℃)	
Leakage current	I ≦ 0.03 CV + 3 (μA) After 5 minutes	
Dissipation factor (tan δ)	Please see the attached characteristics list	
Endurance	After 2000 h application of DC working voltage (1000 h for each polarity) at +85 ℃ ± 2 ℃, when the capacitors are restored to 20 ℃, the capacitors shall meet the following limits.	
	Capacitance change	Within ±20 % of the initial value
	Dissipation factor (tan δ)	≦ 150 % of the initial limit
	DC leakage current	Within the initial limit
Shelf life	After storage for 1000 h at +85 ℃ ± 2 ℃ with no voltage applied and then being stabilized at +20 ℃, capacitors shall meet the limits specified in endurance. (With voltage treatment)	

Frequency correction factor for ripple current

Freq.(Hz) / Capacitance (μF)	50, 60	120	1 k	10 k to
2.2 to 6800	0.70	1.00	1.30	1.70

Dimensions

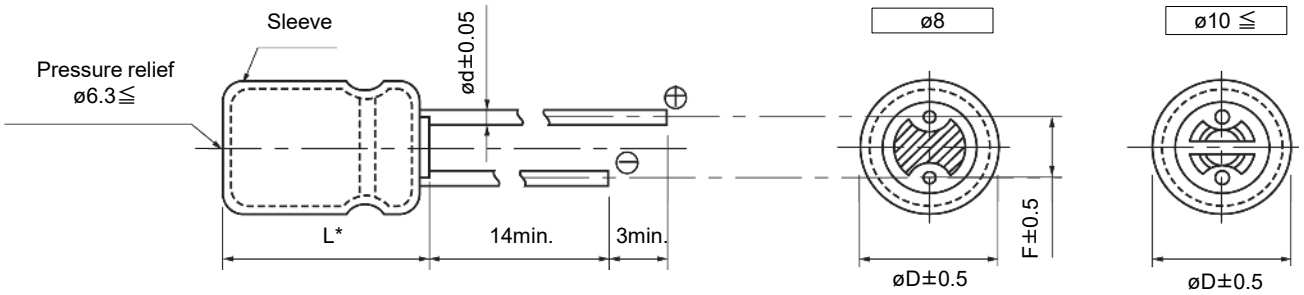

* L ≦ 16 : L±1.0
L ≧ 20 : L±2.0

Unit : mm

øD	5.0	6.3	8.0	10.0	12.5	16.0	18.0
ød	0.5	0.5	0.6	0.6	0.6	0.8	0.8
F	2.0	2.5	3.5	5.0	5.0	7.5	7.5

Design and specifications are each subject to change without notice. Ask factory for the current technical specifications before purchase and/or use.
Should a safety concern arise regarding this product, please be sure to contact us immediately.

Characteristics list

Endurance : 85 ℃ 2000 h (1000 h for each polarity)

Rated voltage (V)	Capacitance (±20 %) (μF)	Case size (mm)		Specification		Lead length (mm)				Part No.	Min. Packaging Q'ty (PCS)	
							Lead space					
		øD	L	Ripple current*1 (mA rms)	tan δ*2	Lead dia. (ød)	Straight	Taping ✻B	Taping ✻i		Strai-ght leads	Taping
6.3	330	8.0	11.5	250	0.30	0.6	3.5	5.0	—	ECEA0JN331U( )	200	1000
	470	10.0	12.5	310	0.30	0.6	5.0	5.0	—	ECEA0JN471X( )	200	500
	1000	10.0	20.0	430	0.30	0.6	5.0	5.0	—	ECEA0JN102U( )	200	500
	2200	12.5	25.0	660	0.32	0.6	5.0	5.0	—	ECEA0JN222U( )	200	500
	3300	16.0	25.0	760	0.34	0.8	7.5	7.5	—	ECEA0JN332U( )	100	250
	4700	16.0	31.5	1170	0.36	0.8	7.5	—	—	ECEA0JN472U	100	—
	6800	18.0	35.5	1450	0.40	0.8	7.5	—	—	ECEA0JN682U	50	—
10	47	5.0	11.0	90	0.25	0.5	2.0	5.0	2.5	ECEA1AN470U( )	200	2000
	100	6.3	11.2	130	0.25	0.5	2.5	5.0	2.5	ECEA1AN101X( )	200	2000
	220	8.0	11.5	200	0.25	0.6	3.5	5.0	—	ECEA1AN221U( )	200	1000
	330	10.0	16.0	280	0.25	0.6	5.0	5.0	—	ECEA1AN331U( )	200	500
	470	10.0	16.0	340	0.25	0.6	5.0	5.0	—	ECEA1AN471U( )	200	500
	1000	12.5	20.0	470	0.25	0.6	5.0	5.0	—	ECEA1AN102X( )	200	500
	2200	16.0	25.0	690	0.27	0.8	7.5	7.5	—	ECEA1AN222U( )	100	250
	3300	16.0	31.5	1090	0.29	0.8	7.5	—	—	ECEA1AN332U	100	—
	4700	18.0	35.5	1200	0.31	0.8	7.5	—	—	ECEA1AN472U	50	—
16	10	5.0	11.0	40	0.20	0.5	2.0	5.0	2.5	ECEA1CN100U( )	200	2000
	22	5.0	11.0	60	0.20	0.5	2.0	5.0	2.5	ECEA1CN220U( )	200	2000
	33	5.0	11.0	80	0.20	0.5	2.0	5.0	2.5	ECEA1CN330U( )	200	2000
	47	6.3	11.2	100	0.20	0.5	2.5	5.0	2.5	ECEA1CN470U( )	200	2000
	220	10.0	12.5	260	0.20	0.6	5.0	5.0	—	ECEA1CN221X( )	200	500
	330	10.0	16.0	330	0.20	0.6	5.0	5.0	—	ECEA1CN331U( )	200	500
	470	10.0	20.0	380	0.20	0.6	5.0	5.0	—	ECEA1CN471U( )	200	500
	1000	12.5	25.0	560	0.20	0.6	5.0	5.0	—	ECEA1CN102U( )	200	500
	2200	16.0	31.5	750	0.22	0.8	7.5	—	—	ECEA1CN222U	100	—
	3300	18.0	35.5	900	0.24	0.8	7.5	—	—	ECEA1CN332U	50	—
25	10	5.0	11.0	45	0.15	0.5	2.0	5.0	2.5	ECEA1EN100U( )	200	2000
	22	5.0	11.0	60	0.15	0.5	2.0	5.0	2.5	ECEA1EN220X( )	200	2000
	33	6.3	11.2	90	0.15	0.5	2.5	5.0	2.5	ECEA1EN330U( )	200	2000
	47	6.3	11.2	110	0.15	0.5	2.5	5.0	2.5	ECEA1EN470U( )	200	2000
	100	8.0	11.5	180	0.15	0.6	3.5	5.0	—	ECEA1EN101U( )	200	1000
	220	10.0	16.0	320	0.15	0.6	5.0	5.0	—	ECEA1EN221U( )	200	500
	330	12.5	20.0	350	0.15	0.6	5.0	5.0	—	ECEA1EN331U( )	200	500
	470	12.5	20.0	430	0.15	0.6	5.0	5.0	—	ECEA1EN471U( )	200	500
	1000	16.0	25.0	680	0.15	0.8	7.5	7.5	—	ECEA1EN102U( )	100	250
	2200	18.0	35.5	900	0.17	0.8	7.5	—	—	ECEA1EN222U	50	—
35	10	5.0	11.0	43	0.15	0.5	2.0	5.0	2.5	ECEA1VN100U( )	200	2000
	22	6.3	11.2	80	0.15	0.5	2.5	5.0	2.5	ECEA1VN220U( )	200	2000
	33	8.0	11.5	100	0.15	0.6	3.5	5.0	—	ECEA1VN330U( )	200	1000
	47	8.0	11.5	120	0.15	0.6	3.5	5.0	—	ECEA1VN470U( )	200	1000
	100	10.0	16.0	230	0.15	0.6	5.0	5.0	—	ECEA1VN101U( )	200	500
	220	12.5	20.0	360	0.15	0.6	5.0	5.0	—	ECEA1VN221U( )	200	500
	330	12.5	20.0	450	0.15	0.6	5.0	5.0	—	ECEA1VN331U( )	200	500
	470	12.5	25.0	590	0.15	0.6	5.0	5.0	—	ECEA1VN471U( )	200	500

*1: Ripple current (120 Hz / +85 ℃)
*2: tan δ (120 Hz / +20 ℃)

・When requesting taped product, please put the letter “B” or “i” between the "( )".
Lead wire pitch ✻B=5 mm, 7.5 mm, i=2.5 mm.

・Please refer to the page of “Taping dimensions”.

Design and specifications are each subject to change without notice. Ask factory for the current technical specifications before purchase and/or use.
Should a safety concern arise regarding this product, please be sure to contact us immediately.

Characteristics list

Endurance : 85 ℃ 2000 h (1000 h for each polarity)

Rated voltage (V)	Capacitance (±20 %) (μF)	Case size (mm)		Specification		Lead length (mm)				Part No.	Min. Packaging Q'ty (PCS)	
							Lead space					
		øD	L	Ripple current*1 (mA rms)	tan δ*2	Lead dia. (ød)	Straight	Taping ✻B	Taping ✻i		Strai-ght leads	Taping
50	2.2	5.0	11.0	18	0.15	0.5	2.0	5.0	2.5	ECEA1HN2R2U( )	200	2000
	3.3	5.0	11.0	25	0.15	0.5	2.0	5.0	2.5	ECEA1HN3R3U( )	200	2000
	4.7	5.0	11.0	30	0.15	0.5	2.0	5.0	2.5	ECEA1HN4R7U( )	200	2000
	10	6.3	11.2	50	0.15	0.5	2.5	5.0	2.5	ECEA1HN100U( )	200	2000
	22	8.0	11.5	90	0.15	0.6	3.5	5.0	—	ECEA1HN220U( )	200	1000
	33	8.0	11.5	110	0.15	0.6	3.5	5.0	—	ECEA1HN330U( )	200	1000
	47	10.0	12.5	140	0.15	0.6	5.0	5.0	—	ECEA1HN470U( )	200	500
	100	10.0	20.0	250	0.15	0.6	5.0	5.0	—	ECEA1HN101U( )	200	500
	220	12.5	25.0	360	0.15	0.6	5.0	5.0	—	ECEA1HN221U( )	200	500
	330	16.0	25.0	450	0.15	0.8	7.5	7.5	—	ECEA1HN331U( )	100	250
	470	16.0	31.5	590	0.15	0.8	7.5	—	—	ECEA1HN471U	100	—

*1: Ripple current (120 Hz / +85 ℃)
*2: tan δ (120 Hz / +20 ℃)
・When requesting taped product, please put the letter “B” or “i” between the "( )".
Lead wire pitch ✻B=5 mm, 7.5 mm, i=2.5 mm.
・Please refer to the page of “Taping dimensions”.

Safty Precautions

When using our products, no matter what sort of equipment they might be used for,
be sure to confirm the applications and environmental conditions with our specifications in advance.

Panasonic INDUSTRY

Panasonic Industry Co., Ltd.
Device Solutions Business Division

1006 Kadoma, Kadoma City, Osaka
571-8506 Japan

© Panasonic Industry

Unauthorized duplication of this catalog is strictly forbidden.
The contents of catalog are as of June 2023.

2023.6