DIMENSIONS:	
A	3.250" ±0.063
B	2.000" ±0.125
C	1.938" ±0.063
D	2.813" ±0.063
G	0.187" ±0.063

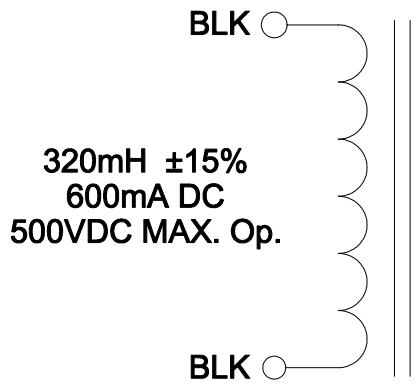

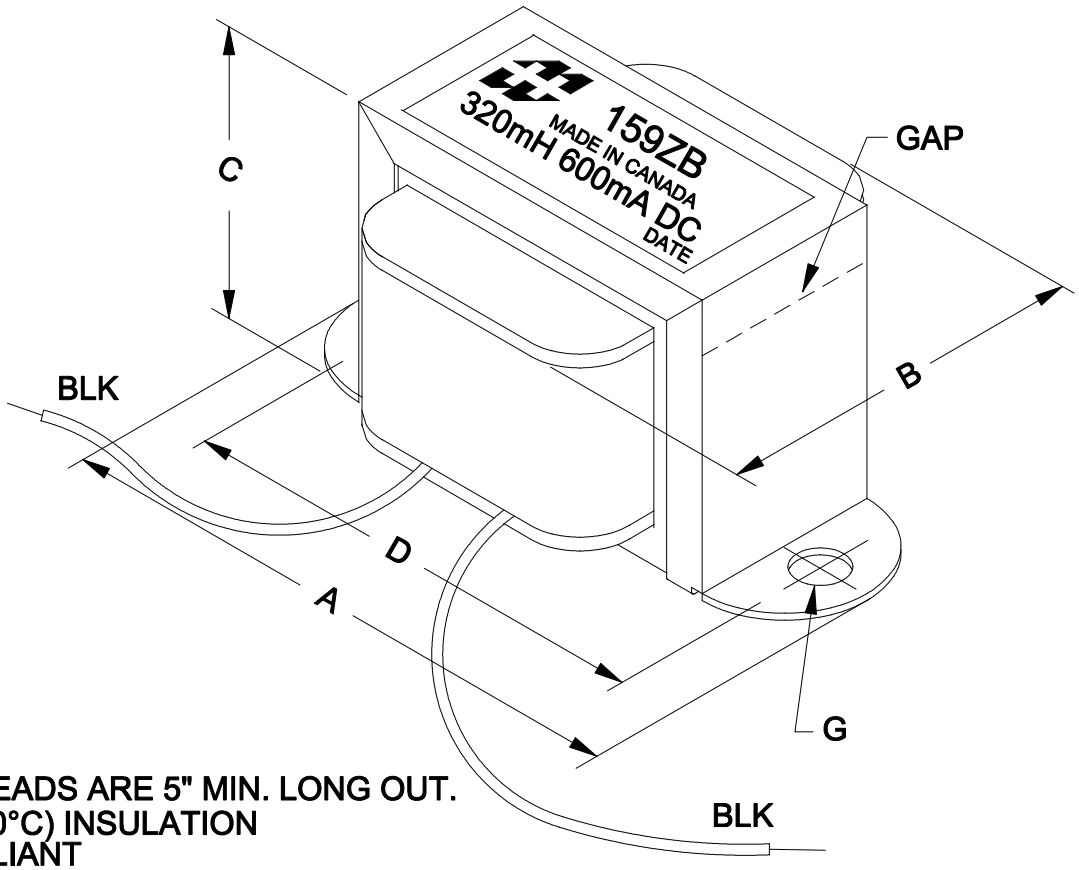

NOTE: ALL LEADS ARE 5" MIN. LONG OUT.
CLASS B (130°C) INSULATION
RoHS COMPLIANT

ELECTRICAL DATA:		
TESTS	CONDITIONS	ACCEPTANCE CRITERIA
INDUCTANCE	@ 30V, 60Hz, 600mA DC, BLK - BLK	320mH ±15%
DCR	@ 20°C, BLK - BLK =	7.818 Ω ±15%
HIPOT	PRMARY - SECONDARY	1500V, 60Hz, 1 SEC

HAMMOND MANUFACTURING T.M.
ELECTRONIC DIVISION
52 RANKIN PLACE,
WATERLOO, ONTARIO, N2J 3Z5
PH # (519) 886-6181
FAX # (519) 886-9540

TITLE: CHOKE

NO	DATE	REVISION	
0	10/01/12	RELEASED.	C.I.

DWG. BY: CORINA ILIE
DATE: 10/01/12
DIM IN(X)MM( )

159ZB