図面番号(DRAWING NO.)
SJ116666

版数 VER.	年月日 DATE	CN NO.	変更内容 DESCRIPTION	製図 DR.	担当 CHK.	査閲 APPD.	承認 APPD.
2	26/JUL/2016	018121	CORRECTION OF DRAWING		M.SASAKI	—	T.MASUMOTO

WISDOM承認 2016/07/26

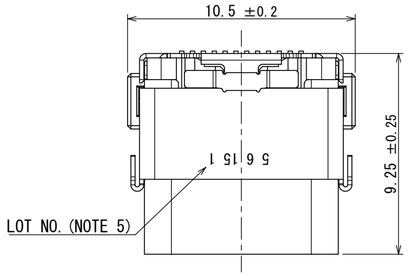

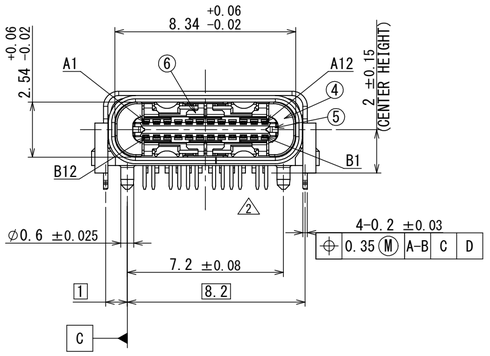

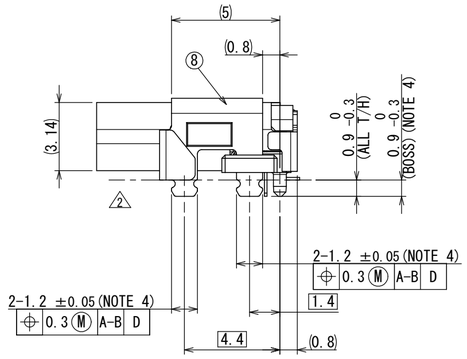

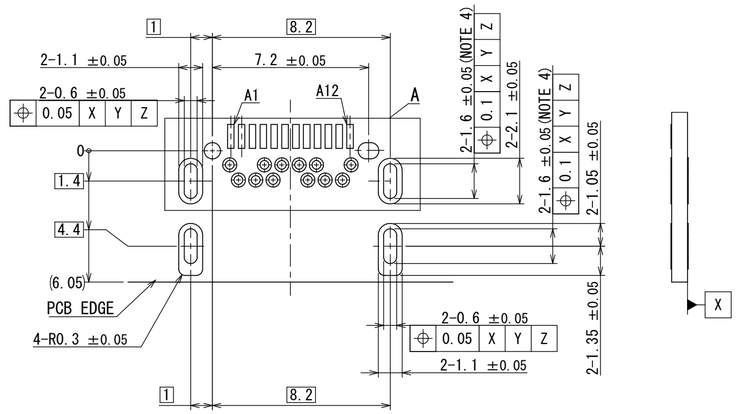

APPLICABLE P.C.B DIMENSION(REF.)
適合基板寸法(参考)

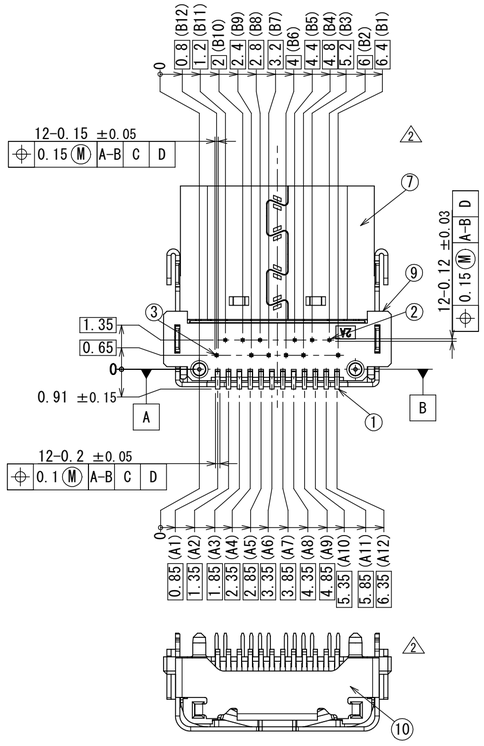

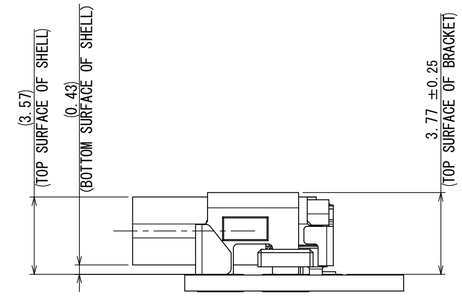

MOUNTING CONDITION
(5 : 1)

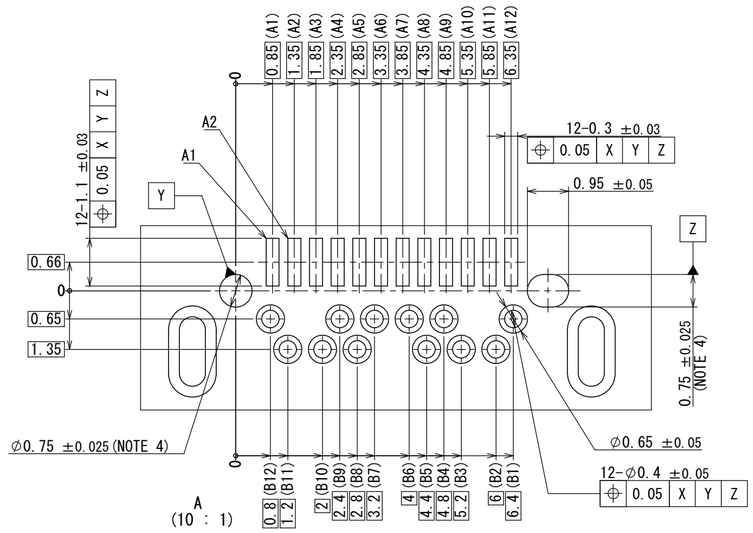

A
(10 : 1)

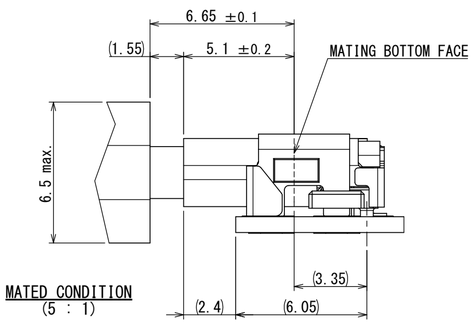

MATED CONDITION
(5 : 1)

TABLE 2. PIN DEFINE

A12	GND	B1	GND
A11	SSRXp2	B2	SSTXp2
A10	SSRXn2	B3	SSTXn2
A9	VBUS	B4	VBUS
A8	SBU1	B5	CC2
A7	Dn1	B6	Dp2
A6	Dp1	B7	Dn2
A5	CC1	B8	SBU2
A4	VBUS	B9	VBUS
A3	SSTXn1	B10	SSRXn1
A2	SSTXp1	B11	SSRXp1
A1	GND	B12	GND
PIN	SIGNAL NAME	PIN	SIGNAL NAME

NOTE 1. COPLANARITY OF SMT TERMINAL IS 0.1 MAX
NOTE 2. RECOMMENDED METAL MASK THICKNESS:120 um
NOTE 3. THE SHELL LENGTH IS LESS THAN THE MINIMUM SPECIFIED BY THE USB STANDARD.
AS SUCH IT CANNOT INDEPENDENTLY BE GUARANTEED TO MEET ALL TYPE C MECHANICAL REQUIREMENTS.
THE SYSTEM IMPLEMENTER IS RESPONSIBLE FOR ACHIEVING PRODUCT RELIABILITY AND PASSING USB COMPLIANCE TESTING.
REFERENCE THE USB TYPE C SPECIFICATION RELEASE 1.1, SECTION 3.2.1, NOTE7.
NOTE 4. CONNECTOR MAY NOT BE GUIDED TO PROPER POSITION ON PCB WITH THIS LENGTH OF GUIDE POSTS AND THA SIZE OF EACH HOLE.
IT MAY CAUSE MOUNTING FAILURE.
NOTE 5. LOT NUMBER IS MARKED AS INDIDATED.

(EX) 5 6 15 1
- EQUIPMENT No. (NUMBER OR ALPHABET)
- DAY (TWO-DIGITS NUMBER)
- MONTH (NUN. TO SEP.:1 TO 9, OCT.:0, NOV.:X, DEC.:Y)
- YEAR (END OF DIGIT AT CHRISTIAN ERA)

TABLE 1

	FINISH	PLATING THICKNESS
CONTACT AREA	GOLD FLASH OVER PLLADIUM-NICKEL OVER NICKEL	NICKEL:2μm MIN. PALLADIUM-NICKEL:0.75μm MIN. GOLD FLASH:0.05μm MIN.
SOLDER TALES	GOLD FLASH OVER NICKEL	NICKEL:2μm MIN. GOLD FLASH:0.03μm MIN.

符号 NO.	名称 DESCRIPTION	個数 QTY.	材料 MATERIAL	仕上 FINISH	備考 REMARKS
10	REAR SHIELD	1	STAINLESS STEEL	NICKEL PLATING	PLATING THICKNESS:1μm Min.
9	LOCATOR	1	THERMOPLASTIC RESIN	COLOR:BLACK	HALOGEN-FREE
8	BRACKET	1	STAINLESS STEEL	NICKEL PLATING	PLATING THICKNESS:1μm Min.
7	SHELL	1	STAINLESS STEEL	NICKEL PLATING	PLATING THICKNESS:1μm Min.
6	GND PLATE	2	STAINLESS STEEL	NICKEL PLATING	PLATING THICKNESS:0.8μm Min.
5	GND MID PLATE	1	STAINLESS STEEL	NICKEL PLATING	PLATING THICKNESS:1μm Min.
4	INSULATOR	1	THERMOPLASTIC RESIN	COLOR:BLACK	HALOGEN-FREE
3	CONTACT C	6	COPPER ALLOY	TABLE 1	
2	CONTACT B	6	COPPER ALLOY	TABLE 1	
1	CONTACT A	12	COPPER ALLOY	TABLE 1	

仕様書(SPECIFICATION)
第1版(ORIGINAL DATE) 18/JUN/2015
製図 DR.
一般公差(GENERAL TOLERANCE)
寸法(DIMENSION): . ±0.8 / .× ±0.4 / .×× ±0.1 / .×××±
角度(ANGLES): ×° ± / ×°×' ±
単位(UNIT):mm
担当 CHK. M.SASAKI
査閲 APPD. —
承認 APPD. T.MASUMOTO
尺度(SCALE) 5:1
シリーズ(SERIES) DX07
日本航空電子工業株式会社
名称(TITLE) DX07SA24XJ2
JAPAN AVIATION ELECTRONICS INDUSTRY, LTD.
質量(MASS)
図面番号(DRAWING NO.) SJ116666
版数(VER.) 2
SIZE A2

JAE-CONNECTOR.COM
Reference Only

JAE Connector DIV. Proprietary. Copyright(C) 2015, Japan Aviation Electronics Industry, LTD.

DCF-C-213H(12.08)