THIS COPY IS PROVIDED ON A RESTRICTED BASIS AND IS NOT TO BE USED IN ANY WAY DETRIMENTAL TO THE INTERESTS OF PANDUIT CORP.

PANDUIT PART NUMBER	USE WITH CABLE TIE	DIMENSIONS			COLOR	WEIGHT grams/100pcs
		"D"	"E" (REF)	"G"		
PMA-065-_0	M, I, S	15.3	7.6	16.5	BLACK	44.6

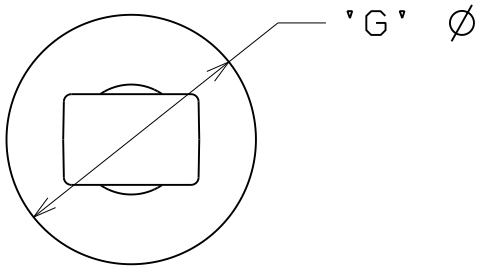

NOTES:
1. SEE CURRENT PRICE SHEET FOR PART NUMBER SUFFIX DESIGNATION FOR PACKAGE SIZE.
2. (*) DIMENSIONAL VARIANCE IS POSSIBLE DUE TO MOLDING PROCESS RELATED SINK MARKS.
3. APPLICATION SPECIFICATION:
   A. NOMINAL HOLE DIAMETER: 6.4 mm
   B. NOMINAL PANEL THICKNESS: 2.0 mm

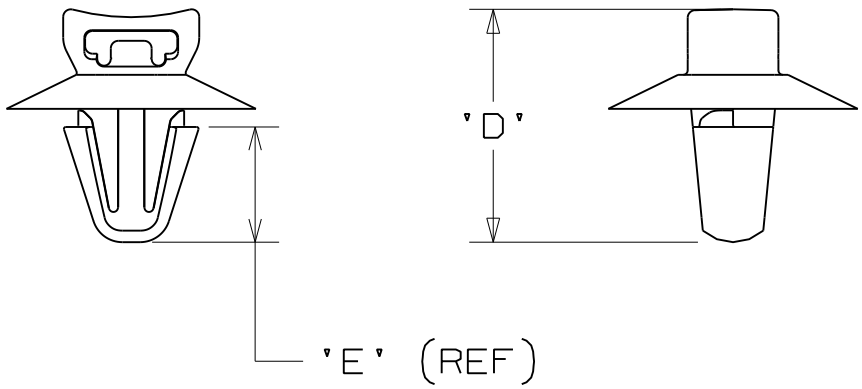

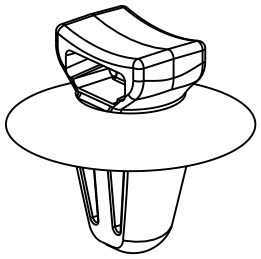

CAD FILENAME/LAYERS: G03487CA_DC_GB3487DD_04B

PANDUIT CORP. TINLEY PARK, ILLINOIS

PMA-065-_0
ARROW HEAD PUSH MOUNT

UNLESS OTHERWISE SPECIFIED, ALL DIMENSIONS ARE GIVEN IN METRIC
TOLERANCE: ±0.5MM

REV	DATE	BY	CHK	DESCRIPTION	ECN - R		CUST	SUP
04B	7/25/08	ARHA		CHANGED DIMS, TABLES, NOTES, REV FORMAT.	GB3487DD	04B		
R	5/23/08	CR-MBA	RRP	INITIAL RELEASE	GB3487DD	R		

DRAWN BY: CR-MBA
DATE: 5/23/08
CHK'D:
MAT'L: NYLON 6/6 WEATHER RESISTANT
SCALE: 2:1 UNLESS NOTED
DRAWING NO.: GB3487DD
DWG SIZE: A