DRAWING MADE IN THIRD ANGLE PROJECTION

/home/us016926/DMTECmod

PART NUMBER	REV	FIRST USED
680355-1	C	122500-1
680355-2	C	565435-5
680355-3	C	354500-1

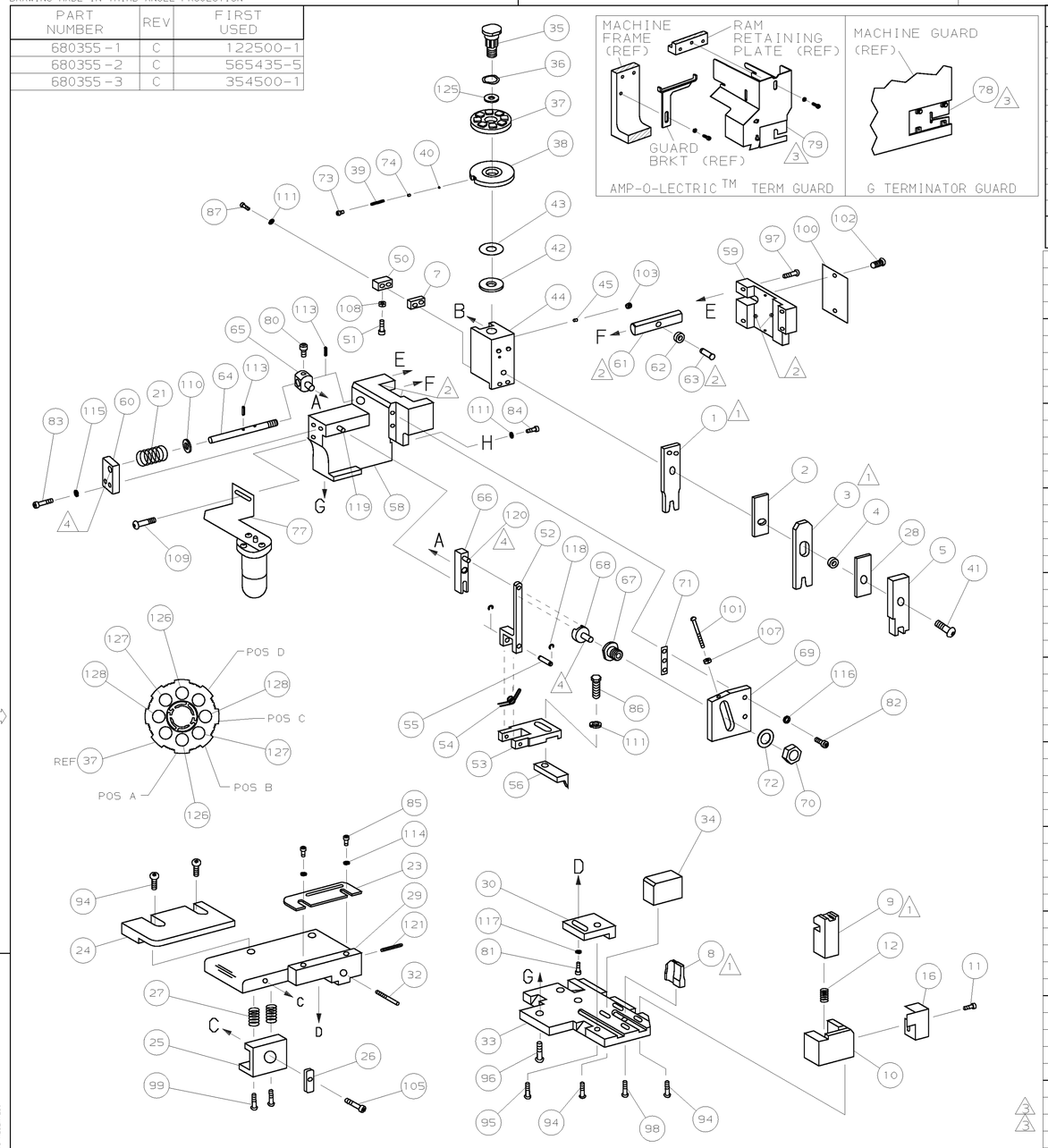

TERMINAL NAME: HYBRID MINI DRAWER 6

RCPT	TAB
179316-1	179321-2
179316-2	1-179321-2
1-179316-2	

CRIMPING DATA

PAD LTR	CRIMP HEIGHT	WIRE SIZE
A	.060 ±.002 [1.52 ±0.05mm]	1.25 mm2
B	.052 ±.002 [1.33 ±0.05mm]	0.85 mm2
C	.047 ±.002 [1.19 ±0.05mm]	0.5 mm2
D	NOT	USED

CRIMP	SIZE	TYPE	RANGE
WIRE	.085 [2.16mm]	F	0.5-1.25 mm2
INSUL	.120 [3.05mm]	F	ø1.85-2.89

WIRE STRIP LENGTH	TERM APPL SPEC	FEED	APPL INSTRUCTION	SET UP GAGE	LAYOUT
–	114-5182	.473	408-8040	458637-1	L1812

-1	-2	-3	U/M	DWG SIZE	PART NO	DESCRIPTION	ITEM NO
							129
2	2	2	–	C	3-354779-2	PIN, WIRE DISC (.3150)C	128
2	2	2	–	C	2-354779-2	PIN, WIRE DISC (.3100)B	127
2	2	2	–	C	354779-6	PIN, WIRE DISC (.3020)A	126
1	1	1	–	A	986950-1	WASHER, FLAT PRECISION	125
1	1	1	–	A	217238-1	GENERAL INSTRUCTION PACKAGE	124
1	1	1	–	–	4088040	SF APPL INST 408-8040	123
							122
1	1	1	–	A	4-21028-0	PIN,SLT SPR(ø.093x.75)ST GDE PL	121
REF	REF	REF	–	A	1-21030-1	PIN,DOWEL(ø.187x.50)LEVER	120
REF	REF	REF	–	A	1-21030-6	PIN,DOWEL(ø.187x1.25)HOUSING	119
REF	REF	REF	–	A	21045-3	RING,RET "C"(ø.187)FD FING PIN	118
1	1	1	–	A	21024-5	WASHER, LOCK(#10)ADJ BLOCK	117
REF	REF	REF	–	A	21024-5	WASHER,LOCK(#10)ADJ PLATE	116
REF	REF	REF	–	A	21024-5	WASHER,LOCK(#10)FEED GDE ROD	115
2	2	2	–	A	21024-2	WASHER,LOCK(#4)FRONT STP GUIDE	114
REF	REF	REF	–	A	5-21028-1	PIN,SLT SPR(ø.125x.50)ADJ ROD	113
							112
4	4	4	–	A	21024-4	WASHER,LOCK(#8)STRIPPER	111
REF	REF	REF	–	A	21899-4	WASHER,FLAT(ø5/16)SCREW ADJ	110
–	1	–	–	A	2-21002-6	SCR,BHC(10-32x.38)LUBE ASSY	109
1	1	1	–	A	21018-5	NUT,HEX(NO.6)HOLDDOWN	108
REF	REF	REF	–	A	21018-5	NUT,HEX(6-32)FEED ADJ	107
							106
1	1	1	–	A	22353-8	SCR,SHLD(ø.187x.25)DRAG LEVER	105
1	1	–	–	A	992031-1	PIN, CLEVIS	104
1	1	1	–	A	21009-2	SCR,SKT SET(1/4-20x.25 LW)RAM	103
2	2	2	–	A	21017-2	SCR,DRIVE(#2x.19)ID PLATE	102
REF	REF	REF	–	A	6-23715-5	SCR,PAN HD(6-32x1.50)FEED ADJ	101
1	1	1	–	B	461264-1	PLATE, IDENTIFICATION	100
2	2	2	–	A	3-21002-0	SCR,BHC(10-32x.88)DRAG	99
1	1	1	–	A	22733-8	SCR,BHC(8-32x.38 LW)ANVIL	98
REF	REF	REF	–	A	2-21002-9	SCR,BHC(10-32x.75)CAP	97
REF	REF	REF	–	A	2-22733-8	SCR,BHC(1/4-20x.62)HOUSING	96
REF	REF	REF	–	A	2-21002-7	SCR,BHC(10-32x.50)SG ADJ BLOCK	95
6	6	6	–	A	2-21002-2	SCR,BHC(8-32x.50)TERM H DWN	94
							93
							92
1	1	1	–	A	1-21002-7	SCR,BHC(6-32x.38)CAM	91
							90
1	1	–	–	A	7-21000-9	SCR,SHC(4-40x.19)STRIPPER	89
							88
2	2	2	–	A	2-21000-9	SCR,SHC(8-32x.75)DEP-HOLD	87
1	1	1	–	A	2-22603-0	SCR,HEX HD(8-32x.31)FEED FINGER	86
2	2	2	–	A	1-21000-3	SCR,SHC(4-40x.25)F ST GUIDE	85
1	1	1	–	A	2-21000-7	SCR,SHC(8-32x.50)STRIPPER	84
REF	REF	REF	–	A	3-21000-7	SCR,SHC(10-32x.75)FEED ROD GD	83
REF	REF	REF	–	A	3-21000-6	SCR,SHC(10-32x.62)FD ADJ BLK	82
1	1	1	–	A	3-21000-4	SCR,SHC(10-32x.38)SG ADJ BL	81
REF	REF	REF	–	A	3-21000-4	SCR,SHC(10-32x.38)PIVOT BLK	80
–	REF	–	–	B	455749-1	GUARD, WINDOW	79
REF	–	–	–	B	679532-1	INSERT, GUARD	78
–	1	–	–	C	1-465184-0	LUBRICATOR ASSY	77
							76
							75
1	1	1	–	A	690603-1	SPRING, ASSIST	74
1	1	1	–	A	23030-1	SCR,SHC(6-32x.25 SL)INS DISC	73
REF	REF	REF	–	A	458109-1	WASHER, SPECIAL	72
REF	REF	REF	–	A	690517-1	SPACER	71

QTY REQD PER ASSY — PARTS LIST

-1	-2	-3	U/M	DWG SIZE	PART NO	DESCRIPTION	ITEM NO
REF	REF	REF	–	B	22594-8	NUT,HEX(1/2-20)	70
REF	REF	REF	–	B	240628-1	PLATE, ADJUSTMENT	69
REF	REF	REF	–	B	240626-1	SHAFT, PIVOT	68
REF	REF	REF	–	B	240633-1	BUSHING	67
REF	REF	REF	–	A	455680-1	LEVER, INTERMEDIATE	66
REF	REF	REF	–	B	240629-1	BLOCK, PIVOT	65
REF	REF	REF	–	A	240632-2	SCREW, ADJ FEED ROD	64
REF	REF	REF	–	B	240659-3	PIN, CAM ROLLER	63
REF	REF	REF	–	B	240658-1	ROLLER, CAM	62
REF	REF	REF	–	B	454398-2	ROD, FEED	61
REF	REF	REF	–	A	454178-1	GUIDE, FEED ROD	60
REF	REF	REF	–	C	454220-1	CAP, RAM	59
REF	REF	REF	–	D	454485-1	HOUSING	58
							57
1	1	1	–	B	458537-2	PAWL, FEED	56
REF	REF	REF	–	B	240624-1	PIN, FEED FINGER	55
REF	REF	REF	–	B	691499-1	SPRING, FEED FINGER	54
REF	REF	REF	–	B	690541-1	HOLDER, FEED FINGER	53
REF	REF	REF	–	A	455679-2	LEVER, TERMINAL FEED ARM	52
1	1	1	–	A	811242-2	BUMPER, HOLDDOWN	51
1	1	1	–	A	690753-1	SPACER, TONKER	50
1	–	–	–	B	690602-6	CAM, PRE-FEED 1 5/8 ST	49
–	1	–	–	B	690602-5	CAM, PRE-FEED 1 1/8 ST	48
–	–	1	–	B	690501-4	CAM, POST-FEED 1 5/8 ST	47
1	1	1	–	B	459456-2	APPLICATOR, BASIC (SUBASSY)	46
1	1	1	–	A	690191-1	PLUG, NYLON	45
1	1	1	–	C	455673-1	RAM	44
1	1	1	–	A	690125-1	WASHER, LAMINATED	43
1	1	1	–	A	690124-1	WASHER, RAM	42
1	1	1	–	A	7-21002-9	BOLT, CRIMPER(5/16x1.00)	41
1	1	1	–	A	23241-6	BALL, STEEL	40
1	1	1	–	A	690170-1	SPRING, COMPRESSION	39
1	1	1	–	C	690142-1	DISC, INSULATION	38
1	1	1	–	D	354777-1	WIRE DISC, PLASTIC	37
1	1	1	–	A	22480-5	WASHER, SPRING	36
1	1	1	–	B	690212-1	POST, RAM	35
1	1	1	–	B	690786-1	SUPPORT, TERMINAL	34
REF	REF	REF	–	D	455675-1	PLATE, BASE	33
1	1	1	–	A	690432-3	SCREW, ADJUSTMENT	32
							31
REF	REF	REF	–	B	455689-1	BLOCK, STRIP GUIDE ADJ	30
1	1	1	–	C	1-458144-9	PLATE, STRIP GUIDE	29
1	1	1	–	C	2-455888-0	SPACER, FRONT SHEAR DEP	28
2	2	2	–	A	1-22284-0	SPRING, DRAG	27
1	1	1	–	B	240793-1	LEVER, DRAG RELEASE	26
1	1	1	–	B	240792-1	DRAG, TERMINAL	25
1	1	1	–	D	6-690504-1	GUIDE, STRIP (REAR)	24
1	1	1	–	A	690438-1	GUIDE, STRIP (FRONT)	23
–	–	1	–	B	690472-2	STRIPPER	22
REF	REF	REF	–	A	4-22284-9	SPRING, FEED RETURN	21
1	1	–	–	A	679218-1	STRIPPER WIRE STOP ASSY	20
1	1	–	–	B	458949-1	STRIPPER	19
							18
							17
1	1	1	–	B	318563-1	GUARD, CHIP, FRONT	16
							15
							14
							13
1	1	1	–	A	5-22280-0	SPRING, SHEAR	12
1	1	1	–	B	690461-1	STOP, SHEAR	11
1	1	1	–	C	690459-1	HOLDER, SHEAR (FRONT)	10
1	1	1	–	C	454276-1	SHEAR, FLOAT (FRONT)	9
1	1	1	–	C	318711-3	ANVIL	8
1	1	1	–	C	4-240641-5	SPACER, DEPRESSOR (REAR)	7
							6
1	1	1	–	C	1-455889-4	DEPRESSOR, SHEAR (FRONT)	5
1	1	1	–	B	238011-7	SPACER, BLOCK CRIMPER	4
1	1	1	–	C	7-456134-3	CRIMPER, INSULATION	3
1	1	1	–	C	455888-5	SPACER, CRIMPER	2
1	1	1	–	C	1-568176-6	CRIMPER, WIRE	1

-1	-2	-3
LEADMAKER	BENCH MODEL K	BENCH MODEL G
MECH POST FEED	MECH PRE FEED	MECH PRE FEED

REVISION OF EACH ASSY NO (WHEN BLANK, USE DWG REVISION)

QTY REQD PER ASSY — PARTS LIST

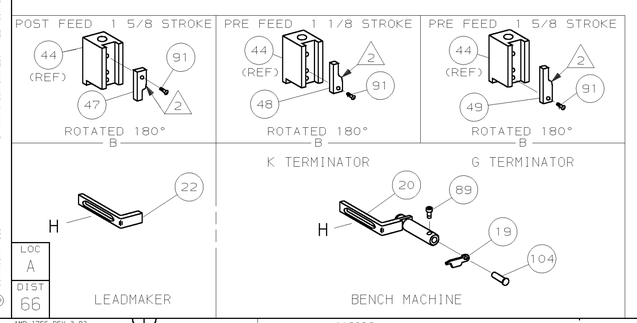

1. RECOMMENDED SPARE PARTS.
2. GREASE LIGHTLY.
3. GUARD MUST BE IN PLACE WHEN OPERATING APPLICATOR IN A BENCH MACHINE.
4. LUBRICATE DAILY USING NO. 20 MACHINE OIL.
5. ITEMS WITH QTY OF REF SPECIFIED (EXCEPT ITEMS 78 AND 79) ARE USED ON ITEM 46.
6. TERMINALS WITH GOLD PLATING REQUIRE LUBRICATION.

P	F	LTR	REVISION RECORD	APP	DATE
		C	ECN 0150-0797-03	TE	7-03
		B	0150-9702-99	TE	11/99
		A	REVISED	CE	9/96

DIMENSIONS IN INCHES. DO NOT SCALE PRINT. TOLERANCES UNLESS OTHERWISE SPECIFIED: 2 PLC DEC ±- 3 PLC DEC ±- 4 PLC DEC ±- ANGLES ± - SURFACE TEXTURE, √ REMOVE BURRS, BREAK SHARP EDGES R.015 MAX

MATL – HT TR – FIN –

DR P.MCCARTY 8-27-96 APP T.ELBIN 8-27-96
CHK C.ERISMAN 8-27-96 REL B. MORGAN 10/21/96

AMP Incorporated Harrisburg, PA 17105-3608

NAME SIDE FEED HDM APPLICATOR MACHINE REF MINI APPL

SCALE – DWG NO 680355 SHEET 1 OF 1 REV C

CAGE CODE 00779 CUSTOMER AND ASSEMBLY DRAWING RESTRICTED TO

THIS DRAWING IS A CONTROLLED DOCUMENT.
RELEASED FOR PUBLICATION 09/09/03 BY AMP INCORPORATED.
© COPYRIGHT 1999 ALL RIGHTS RESERVED.