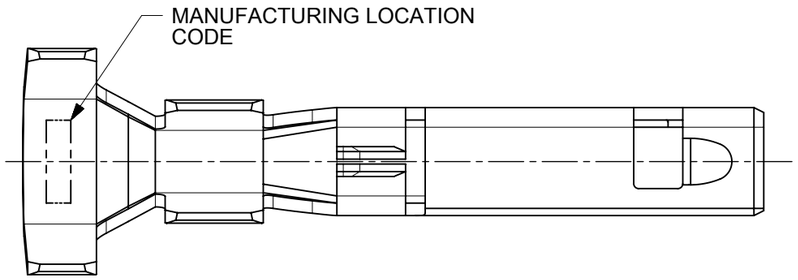

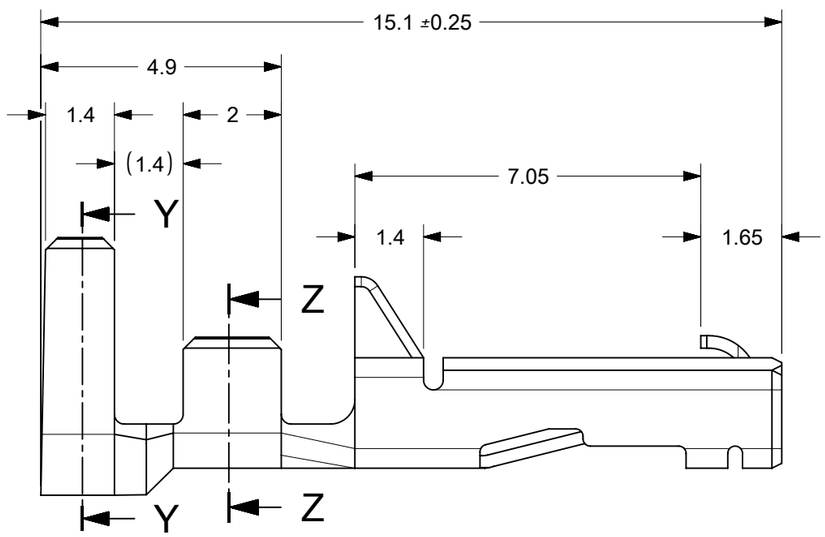

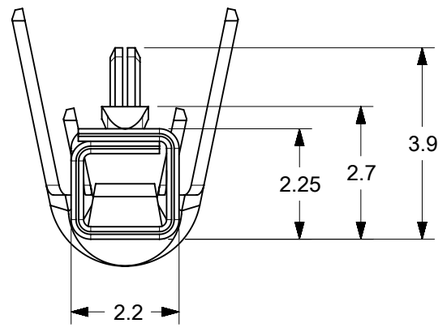

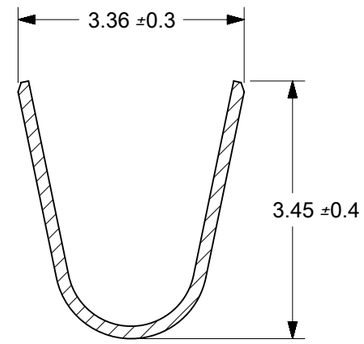

SECTION Y-Y

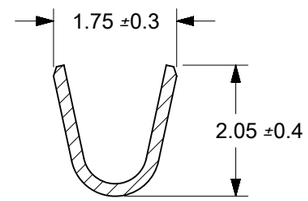

SECTION Z-Z

50598-8110	LOOSE
50598-8010	CHAIN
ENG. NO.	FORM

NOTES:
1. APPLICABLE HOUSING: 51142 AND151207 SERIES
2. MATERIAL: COPPER ALLOY, TIN PLATED(t=0.25)
3. APPLICABLE WIRE RANGE : 22 - 24AWG

THIS DRAWING CONTAINS INFORMATION THAT IS PROPRIETARY TO MOLEX ELECTRONIC TECHNOLOGIES, LLC AND SHOULD NOT BE USED WITHOUT WRITTEN PERMISSION

SYMBOLS: E/A = 0; E/C = 0; E/F = 0; S = 0; ▼ = 0; C = 0; ☒ = 0; ■ = 0; ▽ = 0

DIMENSION UNITS	SCALE
mm	8:1

GENERAL TOLERANCES (UNLESS SPECIFIED)

ANGULAR TOL	±	3.0 °
4 PLACES	±	
3 PLACES	±	
2 PLACES	±	0.2
1 PLACE	±	0.2
0 PLACES	±	

DRAFT WHERE APPLICABLE MUST REMAIN WITHIN DIMENSIONS

CURRENT REV DESC: INITIAL RELEASE

EC NO: 612439
DRWN: MUM 2019/02/20
CHK'D: NCSR 2019/02/26
APPR: NCSR 2019/02/26

INITIAL REVISION:
DRWN: MUM 2019/02/20
APPR: NCSR 2019/02/26

molex

CP65 WTW CONNECTOR
FEMALE TERMINAL AWG 22-24

PRODUCT CUSTOMER DRAWING

DOCUMENT NUMBER	DOC TYPE	DOC PART	REVISION
505988010-SD	PSD	000	A

THIRD ANGLE PROJECTION	DRAWING	SERIES	MATERIAL NUMBER	CUSTOMER	SHEET NUMBER
	A3-SIZE	50598	SEE TABLE	GENERAL MARKET	1 OF 1

DOCUMENT STATUS	P1	RELEASE DATE	2019/02/26 17:00:44

FORMAT: master-8-col-A3
REVISION: H
DATE: 2018/01/16