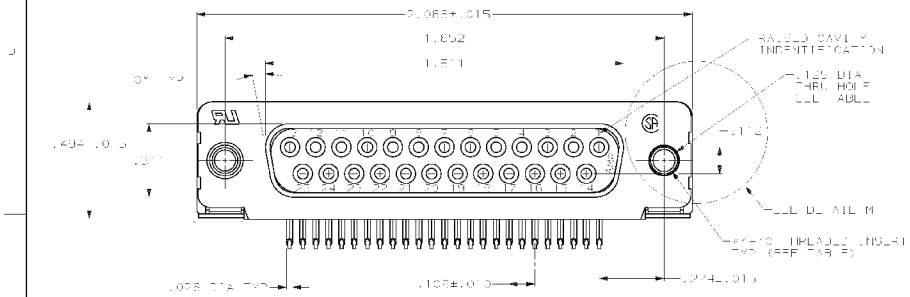

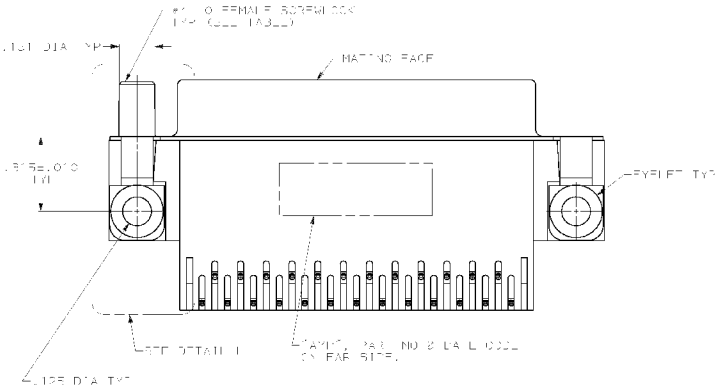

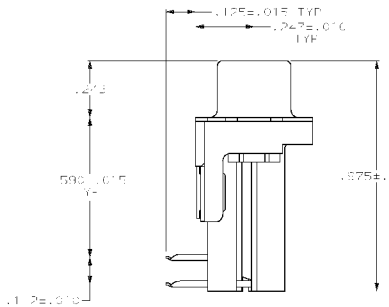

1. CONNECTOR MALE RIGHT ANGLE 25 POSITION PLUG IN AMPLIMITE™ SERIES N CONFIGURED WITH AMP STRIP TOOL SOURCE WHERE APPLICABLE.

2. MOLDED PARTS: FR AMP RETARDANT 94V-0 RATED THERMOPLASTIC, BLACK.
   SHELL: STEEL PLATED ALUMINUM
   CONTACTS: PHOSPHOR BRONZE PER QQ-B-750
   PLUG: BRASS
   SCREW DOGS: STEEL
   INSERT: ZINC

3. SHELL: BRIGHT TIN PLATE
   CONTACTS: SEE TABLE
   PLUG: TIN PLATE
   SCREW DOGS: CLEAR CHROMATE
   INSERT: CLEAR CHROMATE

4. GOLD PLATING PER MIL-G-45204, NICKEL PLATING PER QQ-N-290, TIN PER MIL-T-10727.

5. GOLD FLASH FOR A DISTANCE OF .100 MIN FROM MATING EDGE. IN PLATED .000100-.000200 IN SOLDER POST, AND OVER .000050 NICKEL.

6. .000030 GOLD FOR A DISTANCE OF .100 MIN FROM MATING EDGE. IN PLATED .000100-.000200 IN SOLDER POST, AND OVER .000050 NICKEL.

7. .000015 MIN GOLD FOR A DISTANCE OF .100 MIN FROM MATING EDGE. IN PLATED .000100-.000200 IN SOLDER POST, AND OVER .000050 NICKEL.

8. PACKAGED IN TUBES.

OBSOLETE	FEMALE SCREW DOGS	GROUNDING STRAPS		[illegible]
OBSOLETE	FEMALE SCREW DOGS	[illegible] TABS (SEE DETAIL D)		[illegible]
OBSOLETE	RIGHT ANGLE INSERTS	[illegible] TABS (SEE DETAIL D)		[illegible]
OBSOLETE	.125 DIA HOLE	[illegible] TABS (SEE DETAIL D)		745992-8
OBSOLETE	FEMALE SCREW DOGS	GROUNDING STRAPS		745992-5
OBSOLETE	THREADED INSERTS	GROUNDING STRAPS		745992-4
OBSOLETE	.125 DIA HOLE	GROUNDING STRAPS		745992-3
OBSOLETE	FEMALE SCREW DOGS	[illegible] TABS (SEE DETAIL D)		[illegible]
OBSOLETE	FEMALE SCREW DOGS	[illegible] TABS (SEE DETAIL D)		[illegible]
OBSOLETE	RIGHT ANGLE INSERTS	[illegible] TABS (SEE DETAIL D)		[illegible]
SUPSD BY 745992-0	RIGHT ANGLE INSERTS	[illegible] TABS (SEE DETAIL D)		[illegible]
OBSOLETE	.125 DIA HOLE	[illegible] TABS (SEE DETAIL D)		745992-8
OBSOLETE	.125 DIA HOLE	[illegible] TABS (SEE DETAIL D)		745992-7
	FEMALE SCREW DOGS	GROUNDING STRAPS		745992-6
SUPSD BY 745992-8	FEMALE SCREW DOGS	GROUNDING STRAPS		745992-5
OBSOLETE	RIGHT ANGLE INSERTS	GROUNDING STRAPS		745992-4
	RIGHT ANGLE INSERTS	GROUNDING STRAPS		745992-3
OBSOLETE	.125 DIA HOLE	GROUNDING STRAPS		745992-2
OBSOLETE	.125 DIA HOLE	GROUNDING STRAPS		745992-
	MOUNTING HARDWARE	R-FIT VERSION	CONTACT INSERTION	PART NUMBER

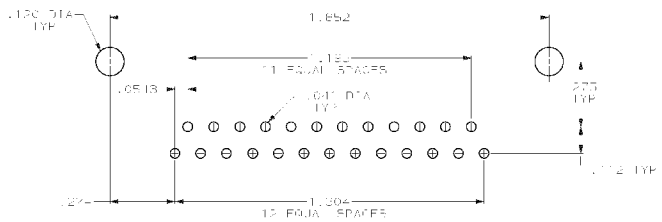

RECOMMENDED P.C. BOARD MOUNTING DIMENSIONS

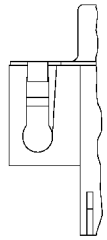

DETAIL L
TYP BOTH ENDS

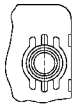

DETAIL M
(FOR -5/-5.1 ONLY)

DO NOT SCALE PRINT.
UNLESS SPECIFIED
DIMENSIONS: INCHES
TOLERANCE: ±.010
X DEC ±
X DEC ±
ANGLES ±
MATERIAL
FINISH

DR 23 51
CHK
APPD 4-22-91
MFG APPD 4-22-91
PRODUCT SPEC 108-[illegible]
APPLICATION SPEC 114-[illegible]

AMP
AMP Incorporated
Harrisburg, PA 17105-3608

NAME
RCPT ASSY, SIZE 3, 25 POS, STANG, W/FRONT MT AL SHELL, .095 DIA PINS, AMPLIMITE IL 20 (.050) CONFIRMED SCOR LLC

SIZE C | CAGE CODE 00779 | DRAWING NO 745992
SCALE 2/1 | SHEET 1 OF 1

CUSTOMER DRAWING