THESE DRAWINGS ARE THE PROPERTY OF QUALTEK ELECTRONICS AND NOT TO BE REPRODUCED FOR OR COMMUNICATED TO A THIRD PARTY WITHOUT THE EXPRESS WRITTEN PERMISSION OF AN OFFICER OF QUALTEK ELECTRONICS.

REVISION			
REV.	DESCRIPTION	DATE	APPROVED
B	RoHS Compliancy	06-01-06	DP

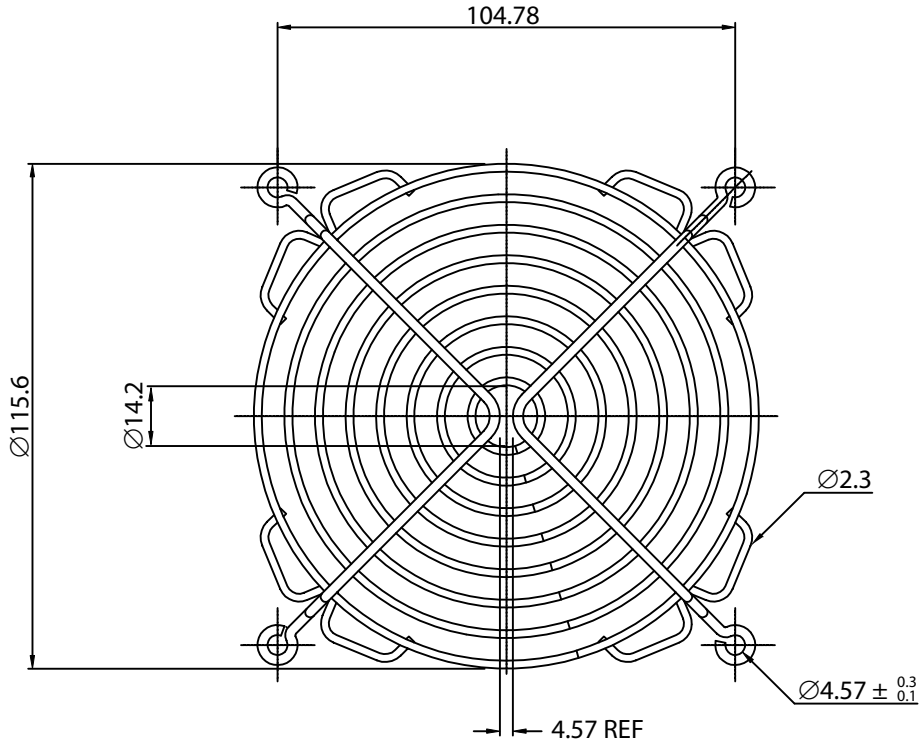

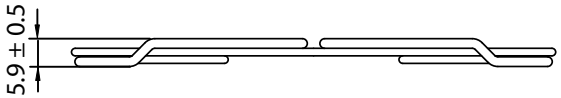

NOTES:

1. MATERIAL: SWRM8 BRIGHT BASIC WIRE
2. FINISH: BRIGHT NICKEL CHROME PLATING
3. 0.35 ± 0.05 DEPTH OF SERRATIONS ON WIRE
4. RING: ∅1.8 ± 0.1mm
   RIB: ∅1.8mm± 0.1mm & ∅2.3 ± 0.1mm
5. GENERAL TOLERANCE UNLESS NOTED IS ± 0.5mm
6. WELD JOINTS TO WITHSTAND 88 LBS PULL FORCE
7. RoHS COMPLIANT

CONTROLLED

Dim range (mm)	Tolerance +/- (mm)
0-5	0.1
5-16	0.15
16-64	0.2
64-250	0.4
250-1000	0.5
1000-1500	1.0

Qualtek Electronics Corp.
FAN-S DIVISION

Part Number: 08128

RoHS Compliant

Description: WIRE FORM FAN GUARD (120mm)

	UNIT: mm	REV: B
Drawn / Date	Checked / Date	Approved / Date
B. ZHANG 12-07-04	12-07-04	JJH / 12-07-04