THIS DRAWING IS UNPUBLISHED. RELEASED FOR PUBLICATION -,- .
© COPYRIGHT - By - ALL RIGHTS RESERVED.

LOC	DIST
AF	50

REVISIONS

P	LTR	DESCRIPTION	DATE	DWN	APVD
	A3	REVISED PER ECR-18-002453	02MAR2018	BDA	DS

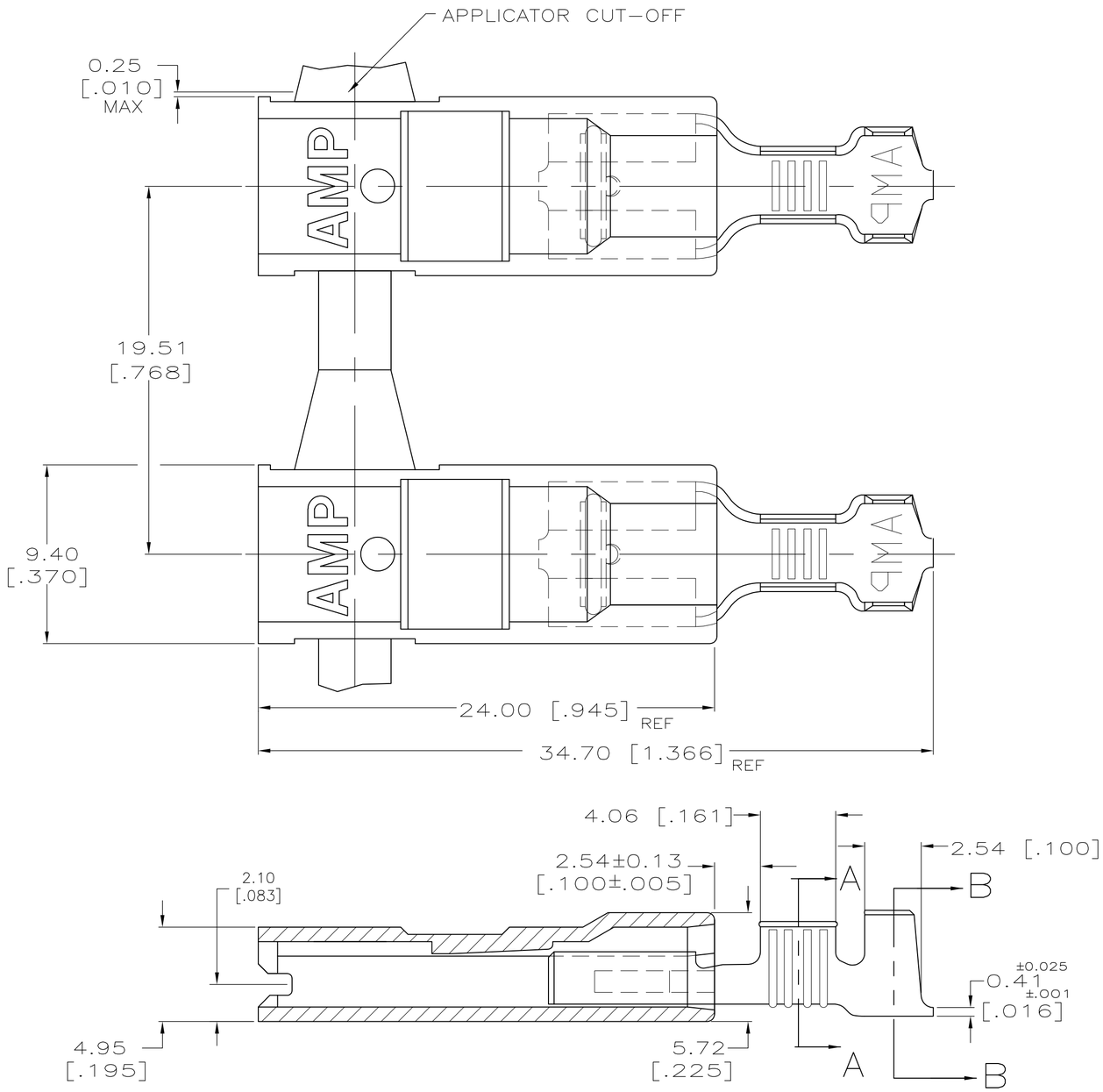

1 BUDGET LOW-INSERTION FASTON TERMINALS, BASE P/N 1742971, ARE USED IN THIS PRODUCT.

2 WIRE SIZE 0.8-2.0mm [18-14] AWG

3 INSULATION RANGE IS 2.79-4.32[.110-.170] DIA.

4 MATING TAB THK IS 0.813±0.025[.032±.001].

5 OFFERED FOR CONSIDERATION IN APPLICATIONS REQUIRING "NON-DRIP" HOUSING MATERIAL.

6 OBSOLETE PARTS

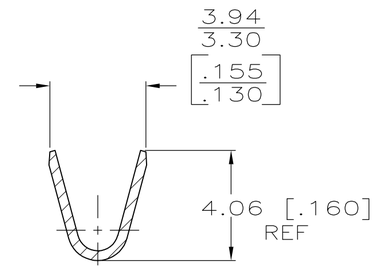

SECTION A-A

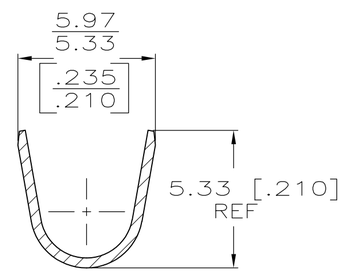

SECTION B-B

TIN PLATE	VO, NYLON 66, NATURAL (WHITE)	6 ~~1969529-2~~
PLAIN		1969529-1
TERMINAL	HOUSING	PART NO.

THIS DRAWING IS A CONTROLLED DOCUMENT.

DIMENSIONS: mm [INCHES]

TOLERANCES UNLESS OTHERWISE SPECIFIED:
0 PLC ± -
1 PLC ± -
2 PLC ± -
3 PLC ± 0.25 [.010]
4 PLC ± -
ANGLES ± -

MATERIAL: BRASS
FINISH: SEE TABLE

DWN JR RUTH 08MAY12
CHK RAY LANDON 08MAY12
APVD RAY LANDON 08MAY12
PRODUCT SPEC 108-1285
APPLICATION SPEC 114-2124
WEIGHT

TE Connectivity

NAME: ASSEMBLY, ULTRA-POD, RECEPTACLE, 6.35 [.250] SERIES -

SIZE	CAGE CODE	DRAWING NO	RESTRICTED TO
A2	00779	C-1969529	—

CUSTOMER DRAWING | SCALE 5:1 | SHEET 1 OF 1 | REV A3

1471-9 (3/11)