3.2mm Round
*micro*LED® *Optopipe*®
Optical Light Pipe, 3 Array, Panel Mounted

Dialight

515-1031

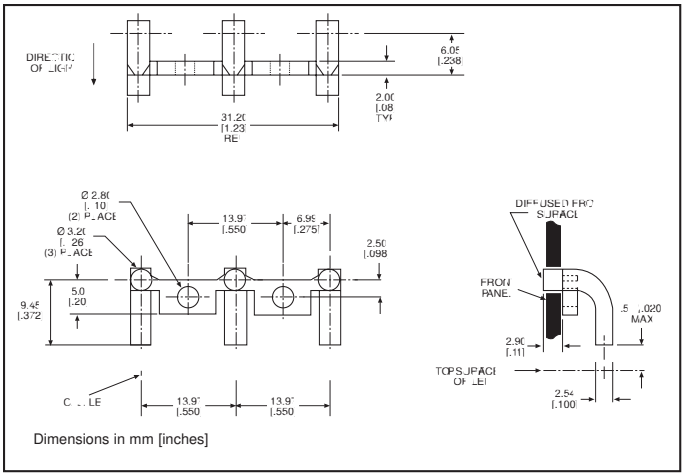

Dimensions in mm [inches]

Recommended MicroLED SMT LEDs for use with 515-1031

PART NO.	PAGE #
597-3xxx-4xx	1-27 & 1-28
597-3xx1-2xx	1-21
597-3xx1-4xx	1-28
597-3xx1-5xx	1-30
597-5x11-4xx	1-27
597-5x12-4xx	1-26
597-5004-4xx	1-26
597-5202-4xx	1-27
597-52x3-4xx	1-26
597-77x1-2xx	1-23 & 1-24
597-77x1-5xx	1-31

Features

- High transmissivity polycarbonate material
- UL94V-0 compliance
- ESD protection (circuit isolation from front panel)
- Wide viewing angle
- Arrays reduce insertion costs
- Secures to panel by heat staking

LED Data

For absolute maximum ratings and other electrical and optical data on the recommended LEDs, refer to LED data sheets.

Operating/Storage Temperature

–30°C to +100°C

Dialight *Optopipe*® Light Pipe Description

This Optopipe® functions as a 3mm array. It is held to the panel by 2 heat stakable pins. Although a wide variety of LED light sources can be used, the recommended light sources are Dialight's 597 Series PLCC-2, PLCC-4, 1206, 1210, 0805, or 0603 Type SMT LEDs. The SMT LEDs are mounted in a straight line under the rear of the part on a 0.550" pitch. The light pipe material is water clear transmissive polycarbonate rated UL94-V0, and has a 35% oxygen index.

Dialight can provide custom Optopipe® solutions for your applications.