DRAWING MADE IN THIRD ANGLE PROJECTION

1385044 ⇔ 1385044

/home/amp18246

PART NUMBER	REV	FIRST USED
1385044-1	0	122500-1
1385044-2	0	565435-5
1385044-3	0	354500-1

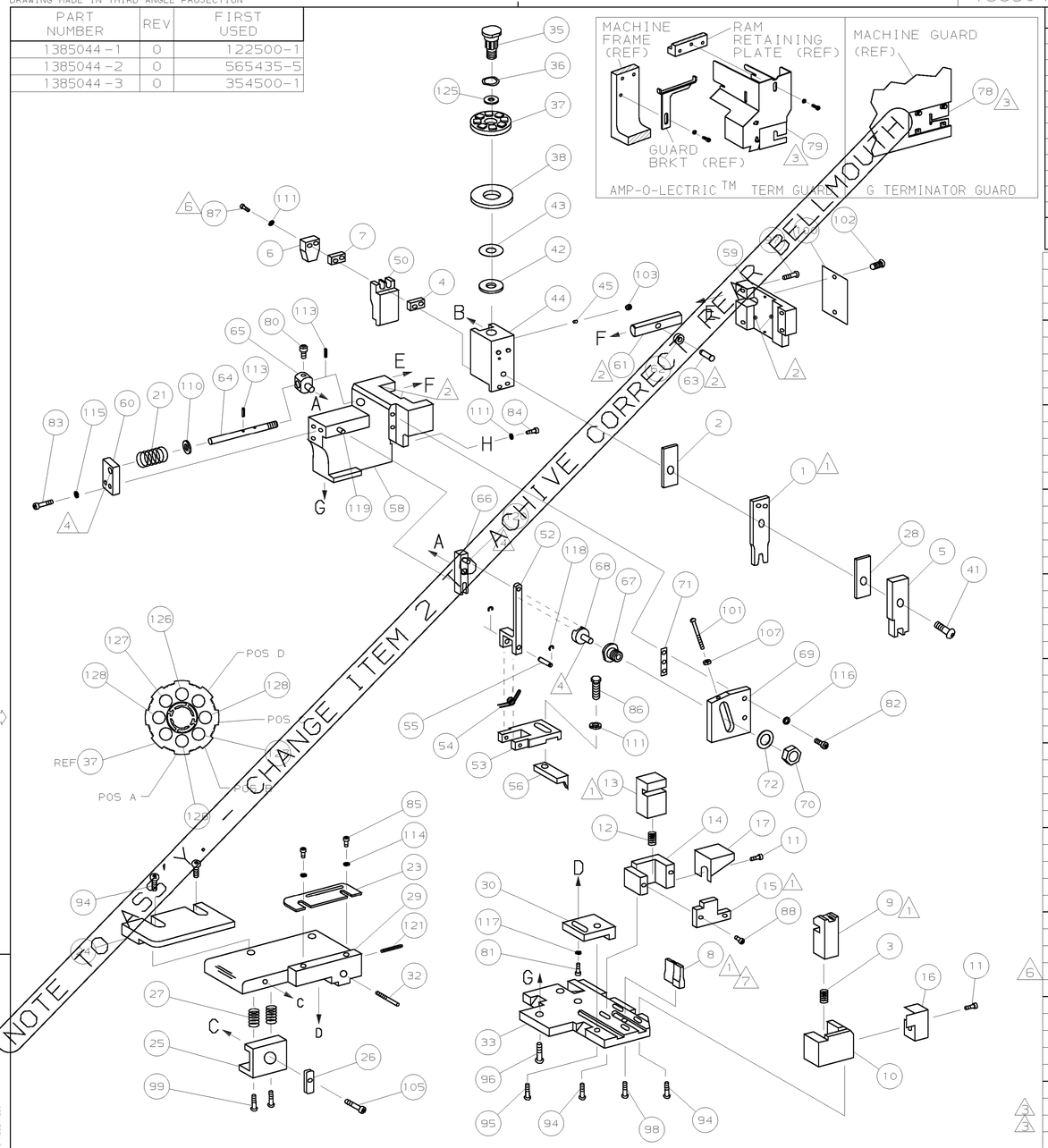

TERMINAL NAME: TAB, SPECIAL

P990R11-1100-0

CRIMP DATA (AMP TERMINAL)

PAD LTR	CRIMP HEIGHT	WIRE SIZE
A	.095 ±.002 [2.41 ±0.05mm]	14
B	.087 ±.002 [2.21 ±0.05mm]	16
C	.082 ±.002 [2.08 ±0.05mm]	18
D	NOT	USED

CRIMP	SIZE	TYPE	RANGE
WIRE	.120 [3.05mm]	F	18-14
INSUL	-	-	-

WIRE STRIP LENGTH	TERM APPL SPEC	FEED	APPL INSTRUCTION	SET UP GAGE	LAYOUT
.195-.211	NONE	.470	408-8040	458637-1	L2371

-3	-2	-1	U/M	DWG SIZE	PART NO	DESCRIPTION	ITEM NO
							129
2	2	2	-	C	5-354778-7	PIN, WIRE DISC (.2780)C	128
2	2	2	-	C	4-354778-7	PIN, WIRE DISC (.2730)B	127
2	2	2	-	C	3-354778-1	PIN, WIRE DISC (.2650)A	126
1	1	1	-	A	986950-1	WASHER, FLAT PRECISION	125
1	1	1	-	A	217238-1	GENERAL INSTRUCTION PACKAGE	124
1	1	1	-	-	4088040	SF APPL INST 408-8040	123
							122
1	1	1	-	A	4-21028-0	PIN,SLT SPR(ø.093x.75)ST GDE PL	121
1	1	1	-	A	1-21030-1	PIN,DOWEL(ø.187x.50)LEVER	120
1	1	1	-	A	1-21030-6	PIN,DOWEL(ø.187x1.25)HOUSING	119
2	2	2	-	A	21045-3	RING,RET "C"(ø.187)FD FING PIN	118
1	1	1	-	A	21024-5	WASHER, LOCK(#10)ADJ BLOCK	117
1	1	1	-	A	21024-5	WASHER,LOCK(#10)ADJ PLATE	116
1	1	1	-	A	21024-5	WASHER,LOCK(#10)FEED GDE ROD	115
2	2	2	-	A	21024-2	WASHER,LOCK(#4)FRONT STP GUIDE	114
2	2	2	-	A	5-21028-1	PIN,SLT SPR(ø.125x.50)ADJ ROD	113
							112
4	4	4	-	A	21024-4	WASHER,LOCK(#8)STRIPPER	111
1	1	1	-	A	21899-4	WASHER,FLAT(ø5/16)SCREW ADJ	110
							109
							108
1	1	1	-	A	21068-5	NUT,HEX(6-32)FEED ADJ	107
							106
1	1	1	-	A	22353-8	SCR,SHLD(ø.187x.25)DRAG LEVER	105
1	1	-	-	A	992031-1	PIN, CLEVIS	104
1	1	1	-	A	21009-2	SCR,SKT SET(1/4-20x.25 LW)RAM	103
2	2	2	-	A	21017-2	SCR,DRIVE(#2x.19)ID PLATE	102
1	1	1	-	A	6-23715-5	SCR,PAN HD(6-32x1.50)FEED ADJ	101
1	1	1	-	B	461264-1	PLATE, IDENTIFICATION	100
2	2	2	-	A	3-21002-0	SCR,BHC(10-32x.88)DRAG	99
1	1	1	-	A	22733-8	SCR,BHC(8-32x.38 LW)ANVIL	98
4	4	4	-	A	2-21002-9	SCR,BHC(10-32x.75)CAP	97
3	3	3	-	A	2-22733-8	SCR,BHC(1/4-20x.62)HOUSING	96
1	1	1	-	A	2-21002-7	SCR,BHC(10-32x.50)SG ADJ BLOCK	95
6	6	6	-	A	2-21002-2	SCR,BHC(8-32x.50)TERM H DWN	94
							93
							92
1	1	1	-	A	1-21002-7	SCR,BHC(6-32x.38)CAM	91
							90
1	1	-	-	A	7-21000-9	SCR,SHC(4-40x.19)STRIPPER	89
2	2	2	-	A	1-21002-7	SCR,SHC(6-32x.38)SHEAR PLATE	88
2	2	2	-	A	3-21000-2	SCR,SHC(8-32x.50)DEP-HOLD	87
1	1	1	-	A	2-22603-0	SCR,HEX HD(8-32x.31)FEED FINGER	86
2	2	2	-	A	1-21000-3	SCR,SHC(4-40x.25)F ST GUIDE	85
1	1	1	-	A	2-21000-7	SCR,SHC(8-32x.50)STRIPPER	84
REF	REF	REF	-	A	3-21000-7	SCR,SHC(10-32x.75)FEED ROD GD	83
1	1	1	-	A	3-21000-6	SCR,SHC(10-32x.62)FD ADJ BLK	82
1	1	1	-	A	3-21000-4	SCR,SHC(10-32x.38)SG ADJ BL	81
1	1	1	-	A	3-21000-[illegible]	SCR,SHC(10-32x.38)PIVOT BLK	80
-	1	-	-	B	455740-1	GUARD, WINDOW	79
1	-	-	-	B	679533-1	INSERT, GUARD	78
							77
							76
							75
							74
							73
1	1	1	-	A	458109-1	WASHER, SPECIAL	72
1	1	1	-	A	690517-1	SPACER	71

QTY REQD PER ASSY — PARTS LIST

-1	-2	-3	U/M	DWG SIZE	PART NO	DESCRIPTION	ITEM NO
1	1	1	-	B	22594-8	NUT,HEX(1/2-20)	70
1	1	1	-	B	240628-1	PLATE, ADJUSTMENT	69
1	1	1	-	B	240626-1	SHAFT, PIVOT	68
1	1	1	-	B	240633-1	BUSHING	67
1	1	1	-	A	455680-1	LEVER, INTERMEDIATE	66
1	1	1	-	B	240629-1	BLOCK, PIVOT	65
1	1	1	-	A	240632-2	SCREW, ADJ FEED ROD	64
1	1	1	-	B	240659-3	PIN, CAM ROLLER	63
1	1	1	-	B	240658-1	ROLLER, CAM	62
1	1	1	-	B	454398-2	ROD, FEED	61
1	1	1	-	A	454178-1	GUIDE, FEED ROD	60
1	1	1	-	C	454220-1	CAP, RAM	59
1	1	1	-	D	454485-3	HOUSING	58
							57
1	1	1	-	B	690542-2	PAWL, FEED	56
1	1	1	-	B	240624-1	PIN, FEED FINGER	55
1	1	1	-	B	691499-1	SPRING, FEED FINGER	54
1	1	1	-	B	690541-1	HOLDER, FEED FINGER	53
1	1	1	-	A	455679-1	LEVER, TERMINAL FEED ARM	52
							51
1	1	1	-	A	1320119-3	TERMINAL BENDING TOOL	50
1	-	-	-	B	690602-6	CAM, PRE-FEED 1 5/8 ST	49
-	1	-	-	B	690602-5	CAM, PRE-FEED 1 1/8 ST	48
-	-	1	-	B	690501-[illegible]	CAM, POST-FEED 1 5/8 ST	47
							46
1	1	1	-	A	690[illegible]-1	PLUG, NYLON	45
1	1	1	-	C	455[illegible]-3-1	RAM	44
1	1	1	-	A	[illegible]125-1	WASHER, LAMINATED	43
1	1	1	-	A	690124-1	WASHER, RAM	42
1	1	1	-	[illegible]	7-21002-9	BOLT, CRIMPER(5/16x1.00)	41
							40
							39
1	1	1		A	690223-2	SPACER, INSULATION DISC	38
1	1	[illegible]		D	354777-1	WIRE DISC, PLASTIC	37
1	1	[illegible]	-	A	22480-5	WASHER, SPRING	36
1	[illegible]	[illegible]	-	B	690212-1	POST, RAM	35
							34
[illegible]	1	1	-	D	462504-5	PLATE, BASE	33
[illegible]	[illegible]	1	-	A	690432-3	SCREW, ADJUSTMENT	32
							31
[illegible]	1	1	-	B	455689-1	BLOCK, STRIP GUIDE ADJ	30
1	1	1	-	C	458144-6	PLATE, STRIP GUIDE	29
1	1	1	-	C	455888-4	SPACER, FRONT SHEAR DEP	28
2	2	2	-	A	1-22284-0	SPRING, DRAG	27
1	1	1	-	B	240793-1	LEVER, DRAG RELEASE	26
1	1	1	-	B	240792-1	DRAG, TERMINAL	25
1	1	1	-	D	2-90765-4	GUIDE, STRIP (REAR)	24
1	1	1	-	A	690438-1	GUIDE, STRIP (FRONT)	23
-	-	1	-	B	690472-2	STRIPPER	22
1	1	1	-	A	4-22284-9	SPRING, FEED RETURN	21
1	1	-	-	A	679218-1	STRIPPER WIRE STOP ASSY	20
1	1	-	-	B	458949-1	STRIPPER	19
							18
1	1	1	-	A	691668-1	GUARD, CHIP (REAR)	17
1	1	1	-	B	318563-1	GUARD, CHIP, FRONT	16
1	1	1	-	B	1338990-1	PLATE, SHEAR (REAR)	15
1	1	1	-	B	1-690462-2	HOLDER, SHEAR (REAR)	14
1	1	1	-	C	1-690463-0	SHEAR, FLOAT (REAR)	13
1	1	1	-	A	5-22280-0	SPRING, SHEAR	12
2	2	2	-	B	690461-2	STOP, SHEAR	11
1	1	1	-	C	2-690459-1	HOLDER, SHEAR (FRONT)	10
1	1	1	-	C	1-462006-3	SHEAR, FLOAT (FRONT)	9
1	1	1	-	C	1338991-1	ANVIL	8
1	1	1	-	C	2-240641-0	SPACER, DEPRESSOR (REAR)	7
1	1	1	-	A	1-690468-2	DEPRESSOR, SHEAR (REAR)	6
1	1	1	-	C	2-455889-6	DEPRESSOR, SHEAR (FRONT)	5
1	1	1	-	C	5-240641-7	SPACER, DEPRESSOR (REAR)	4
1	1	1	-	A	5-22279-2	SPRING, SHEAR	3
1	1	1	-	C	2-455888-8	WIRE CRIMPER SPACER	2
1	1	1	-	C	1-456409-4	CRIMPER, WIRE	1

	-1	-2	-3
LEADMAKER	MECH POST FEED		
BENCH MODEL K	MECH PRE FEED		
BENCH MODEL G	MECH PRE FEED		

QTY REQD PER ASSY — PARTS LIST

NOTE TO ASS'Y. - CHANGE ITEM 2 TO ACHIVE CORRECT REAR BELLMOUTH

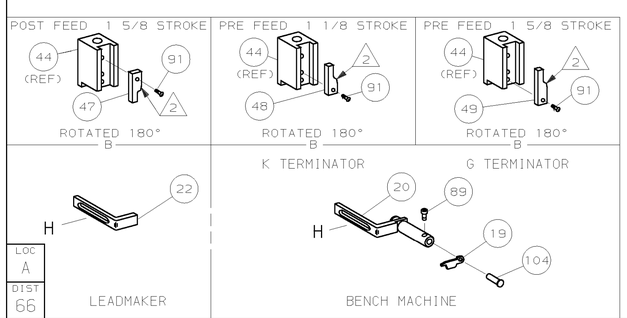

1. RECOMMENDED SPARE PARTS.
2. GREASE LIGHTLY.
3. GUARD MUST BE IN PLACE WHEN OPERATING APPLICATOR IN A BENCH MACHINE.
4. LUBRICATE DAILY USING NO. 20 MACHINE OIL.
5. ITEMS WITH QTY OF REF SPECIFIED (EXCEPT ITEMS 78 AND 79) ARE USED ON ITEM 46.
6. CUT TO LENGTH AT ASSEMBLY.
7. ANVIL TO BE ASSEMBLED IN FAR RIGHT SLOT IN CURRENT VIEW.
8. THIS IS A TWO STAGE APPLICATOR. FIRST STAGE SHEARS REAR CARRIER; SECOND STAGE CRIMPS, BENDS TERMINAL TO 90° AND SHEARS FRONT CARRIER STRIP.

P	F	LTR	REVISION RECORD	APP	DATE
		01	PRE-RIVISED	BH	4/00

DIMENSIONS IN INCHES. DO NOT SCALE PRINT. TOLERANCES UNLESS OTHERWISE SPECIFIED: 2 PLC DEC ±- 3 PLC DEC ±- 4 PLC DEC ±- ANGLES ± - SURF TEXTURE, √ REMOVE BURRS, BREAK SHARP EDGES R.015 MAX

MATL - HT TR - FIN -

DR 19APR00 B.HIGMAN APP 19APR00 T.ELBIN

CHK 19APR00 B.HIGMAN REL - -

AMP Incorporated Harrisburg, PA 17105-3608

NAME SIDE FEED HDM APPLICATOR

MACHINE REF MINI APPL B

SCALE - D DWG NO 1385044 SHEET 1 OF 1 REV 01

CAGE CODE 00779 CUSTOMER AND ASSEMBLY DRAWING RESTRICTED TO —

LOC A DIST 66

THIS DRAWING IS A CONTROLLED DOCUMENT.

THIS DRAWING IS UNPUBLISHED. © COPYRIGHT 19 BY AMP INCORPORATED. ALL RIGHTS RESERVED. RELEASED FOR PUBLICATION .19