THIS DRAWING IS UNPUBLISHED. RELEASED FOR PUBLICATION 20
© COPYRIGHT 20 BY - ALL RIGHTS RESERVED.

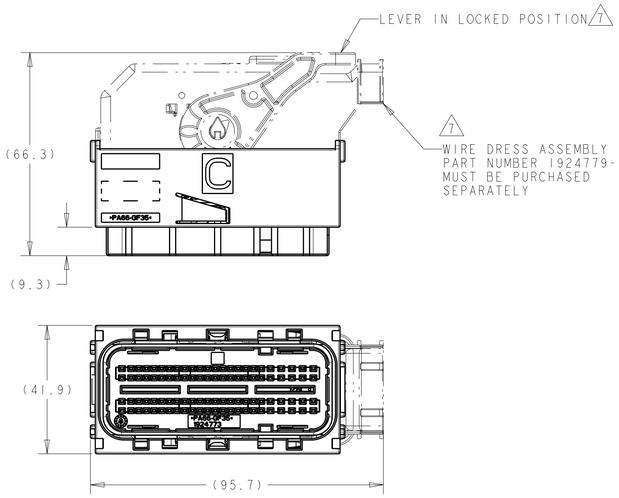

RIGHT EXIT PLUG ASSEMBLY SHOWN
WITH OPTIONAL
WIRE DRESS ASSEMBLY
(MUST BE PURCHASED SEPARATELY)
SCALE 1:1

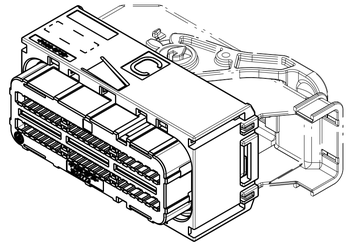

ISOMETRIC VIEW
SCALE 1:1

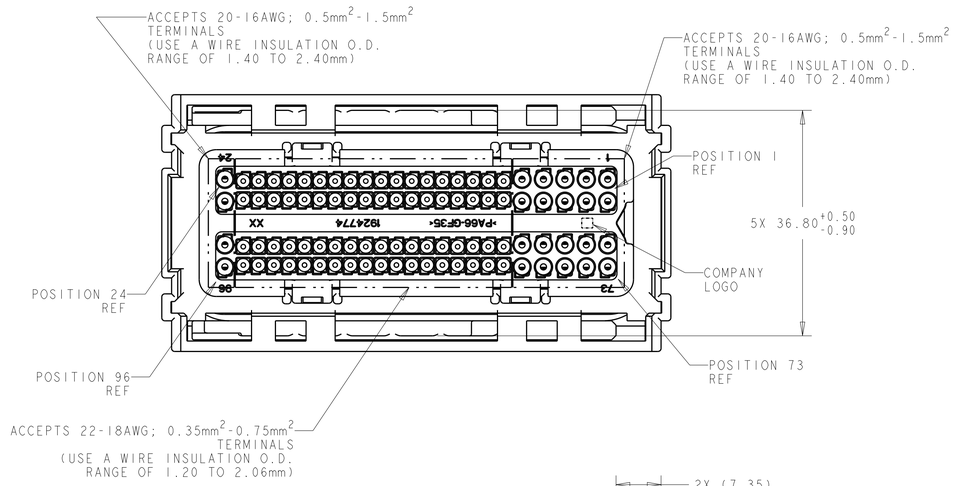

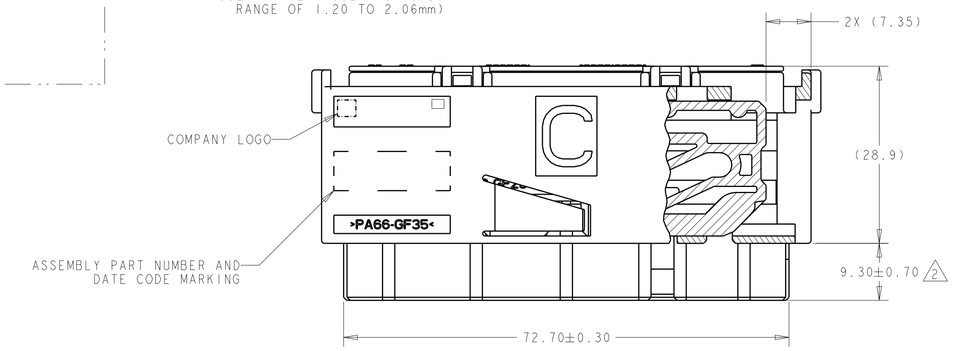

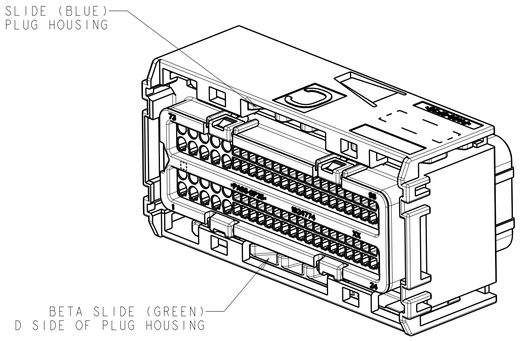

(METHOD FOR IDENTIFYING EXIT ORIENTATION)

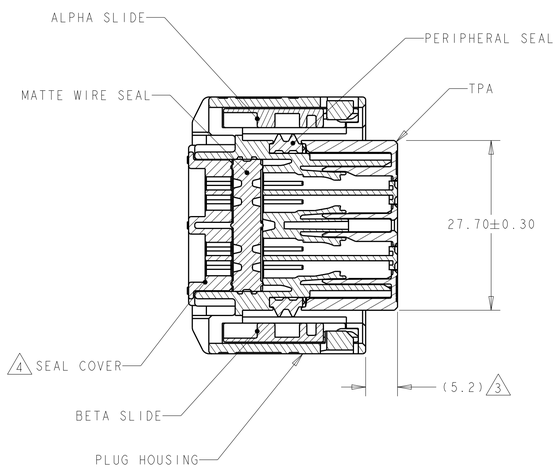

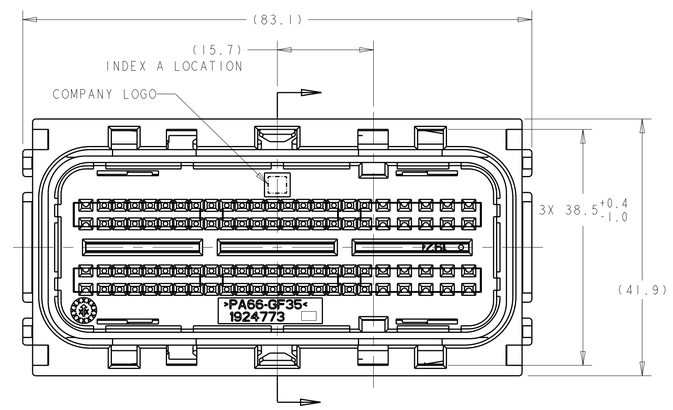

1. PLUG HOUSING AND SEAL COVER: NYLON 6/6, BLACK.
   TPA: NYLON 6/6, COLOR - SEE TABLE.
   MATTE WIRE SEAL: SILICONE, LIGHT BLUE.
   PERIPHERAL SEAL: SILICONE, GREEN.
   ALPHA SLIDE: NYLON 6/6, BLUE.
   BETA SLIDE: NYLON 6/6, GREEN.

2. TPA SHOWN IN PRE-LATCHED, AS SHIPPED, POSITION.

3. TPA SHOWN IN CLOSED POSITION.

4. SEE TABLE ON SHEET 2 AND 3 FOR SEAL COVER PIN OUT CONFIGURATION.

5. PLUG ASSEMBLY MATES WITH TE CONNECTIVITY INTERFACE DRAWING 1924771_INT, POLARIZATION A.

6. PLUG ASSEMBLY WILL ACCEPT THE FOLLOWING GET TERMINAL PART NUMBERS:
   1393364-1 (GOLD 22AWG; 0.35mm²)
   1393365-1 (GOLD 18-20AWG; 0.75mm²-0.5mm²)
   1924878-1 (TIN/SILVER 22AWG; 0.35mm²)
   1924879-1 (TIN/SILVER 18-20AWG; 0.75mm²-0.5mm²)
   1924782-1 (TIN/SILVER 1.0mm²)
   1924880-1 (TIN/SILVER 16AWG; 1.5mm²)

7. WIRE DRESS ASSEMBLY MUST BE INSTALLED ONTO PLUG ASSEMBLY WITH LEVER IN LOCKED POSITION.

8. APPLICATION SPEC'S: 408-10229, 408-10230

9. NOTE DELETED.

10. FORCE TO SEAT TPA COMPONENT FROM PRE-SET TO LOCKED (FULLY LOADED W/ TERMINALS) TO BE 83N MAX.

11. FORCE TO MOVE TPA FROM FULLY LOCKED TO PRE-SET TO BE 115N MAX. FLAT BLADE SCREWDRIVER SUGGESTED FOR REMOVAL OF TPA.

REVISIONS

P	LTR	DESCRIPTION	DATE	DWN	APVD
	C7	REV PER ECO-17-013192	07SEP2017	JMS	GK
	C8	ECO-17-017519	29NOV2017	KP	GK
	C9	REVISED PER ECO-18-006949	03MAY2018	JMS	GK
	C10	REVISED PER ECO-20-011499	14AUG2020	CN	HC

ALL CLOSED	GRAY	A	9-1924939-9
SEE TABLE, SH 3	GRAY	A	7-1924939-1
SEE TABLE, SH 3	GRAY	A	7-1924939-0
SEE TABLE, SH 3	GRAY	A	6-1924939-9
SEE TABLE, SH 3	GRAY	A	6-1924939-8
SEE TABLE, SH 3	GRAY	A	6-1924939-7
SEE TABLE, SH 2	GRAY	A	6-1924939-6
SEE TABLE, SH 2	GRAY	A	6-1924939-5
SEE TABLE, SH 2	GRAY	A	6-1924939-4
SEE TABLE, SH 2	GRAY	A	6-1924939-3
SEE TABLE, SH 2	GRAY	A	6-1924939-2
SEE TABLE, SH 2	GRAY	A	6-1924939-1
SEE TABLE, SH 2	GRAY	A	6-1924939-0
SEE TABLE, SH 2	GRAY	A	5-1924939-9
SEE TABLE, SH 2	GRAY	A	5-1924939-8
SEE TABLE, SH 2	GRAY	A	5-1924939-7
SEE TABLE, SH 2	GRAY	A	5-1924939-6
SEE TABLE, SH 2	GRAY	A	5-1924939-5
SEE TABLE, SH 2	GRAY	A	5-1924939-4
SEE TABLE, SH 2	GRAY	A	5-1924939-3
SEE TABLE, SH 2	GRAY	A	5-1924939-2
SEE TABLE, SH 2	GRAY	A	5-1924939-1
SEE TABLE, SH 2	GRAY	A	5-1924939-0
SEE TABLE, SH 2	GRAY	A	4-1924939-9
SEE TABLE, SH 2	GRAY	A	4-1924939-8
SEE TABLE, SH 2	GRAY	A	4-1924939-7
SEE TABLE, SH 2	GRAY	A	4-1924939-6
SEE TABLE, SH 2	GRAY	A	4-1924939-5
SEE TABLE, SH 2	GRAY	A	4-1924939-4
SEE TABLE, SH 2	GRAY	A	4-1924939-3
SEE TABLE, SH 2	GRAY	A	4-1924939-2
SEE TABLE, SH 2	GRAY	A	4-1924939-1
SEE TABLE, SH 2	GRAY	A	4-1924939-0
SEE TABLE, SH 2	GRAY	A	3-1924939-9
SEE TABLE, SH 2	GRAY	A	3-1924939-8
SEE TABLE, SH 2	GRAY	A	3-1924939-7
SEE TABLE, SH 2	GRAY	A	3-1924939-6
SEE TABLE, SH 2	GRAY	A	3-1924939-5
SEE TABLE, SH 2	GRAY	A	3-1924939-4
SEE TABLE, SH 2	GRAY	A	3-1924939-3
SEE TABLE, SH 2	GRAY	A	3-1924939-2
SEE TABLE, SH 2	GRAY	A	3-1924939-1
SEE TABLE, SH 2	GRAY	A	3-1924939-0
SEE TABLE, SH 2	GRAY	A	2-1924939-9
SEE TABLE, SH 2	GRAY	A	2-1924939-8
SEE TABLE, SH 2	GRAY	A	2-1924939-7
SEE TABLE, SH 2	GRAY	A	2-1924939-6
SEE TABLE, SH 2	GRAY	A	2-1924939-5
SEE TABLE, SH 2	GRAY	A	2-1924939-4
SEE TABLE, SH 2	GRAY	A	2-1924939-3
SEE TABLE, SH 2	GRAY	A	2-1924939-2
SEE TABLE, SH 2	GRAY	A	2-1924939-1
SEE TABLE, SH 2	GRAY	A	2-1924939-0
SEE TABLE, SH 2	GRAY	A	1-1924939-9
SEE TABLE, SH 2	GRAY	A	1-1924939-8
SEE TABLE, SH 2	GRAY	A	1-1924939-7
SEE TABLE, SH 2	GRAY	A	1-1924939-6
SEE TABLE, SH 2	GRAY	A	1-1924939-5
SEE TABLE, SH 2	GRAY	A	1-1924939-4
SEE TABLE, SH 2	GRAY	A	1-1924939-3
SEE TABLE, SH 2	GRAY	A	1-1924939-2
SEE TABLE, SH 2	GRAY	A	1-1924939-1
SEE TABLE, SH 2	GRAY	A	1-1924939-0
SEE TABLE, SH 2	GRAY	A	1924939-9
SEE TABLE, SH 2	GRAY	A	1924939-8
SEE TABLE, SH 2	GRAY	A	1924939-7
SEE TABLE, SH 2	GRAY	A	1924939-6
SEE TABLE, SH 2	GRAY	A	1924939-5
SEE TABLE, SH 2	GRAY	A	1924939-4
SEE TABLE, SH 2	GRAY	A	1924939-3
SEE TABLE, SH 2	GRAY	A	1924939-2
ALL OPEN	GRAY	A	1924939-1
BLOCKED CIRCUITS	TPA COLOR	INDEX REF	PART NUMBER

THIS DRAWING IS A CONTROLLED DOCUMENT.

DIMENSIONS: mm

TOLERANCES UNLESS OTHERWISE SPECIFIED:
0 PLC ±-
1 PLC ±-
2 PLC ±0.25
3 PLC ±-
4 PLC ±-
ANGLES ±-

MATERIAL - 1 -
FINISH - -

DWN DJ HARDY 29NOV2007
CHK AJ VASBINDER 03DEC2007
APVD AJ VASBINDER 03DEC2007
PRODUCT SPEC TBD
APPLICATION SPEC - 8
WEIGHT -

TE Connectivity

NAME PLUG ASSEMBLY, 96 POSITION, INDEX A - RIGHT EXIT, SEALED, GPEC II

SIZE A1 | CAGE CODE 00779 | DRAWING NO C-1924939 | RESTRICTED TO -

CUSTOMER DRAWING | SCALE 2:1 | SHEET 1 OF 3 | REV C10

4805 (3/13)

THIS DRAWING IS UNPUBLISHED. RELEASED FOR PUBLICATION 20
© COPYRIGHT 20 BY - ALL RIGHTS RESERVED.

REVISIONS

P	LTR	DESCRIPTION	DATE	DWN	APVD
	-	SEE SHEET 1	-	-	-

VEHICLE PLATFORM/APPLICATION	PART NUMBER
DASH HARNESS WK-WD	5-1924939-4
DASH HARNESS WK-WD	5-1924939-3
DASH HARNESS WK-WD	5-1924939-2
RU - DASH HARNESS ECM CONNECTOR FOR BASE/PHEV	5-1924939-1
CHRYSLER JEEP 523 ECU	5-1924939-0
LA CHASSIS-3.6L	4-1924939-9
LA CHASSIS-5.7L/6.4L MAN TRANS	4-1924939-8
LA CHASSIS-5.7L/6.4L AUTO TRANS	4-1924939-7
LA CHASSIS-6.2L MAN TRANS	4-1924939-6
LA CHASSIS-6.2L AUTO TRANS	4-1924939-5
WK-WD 2015	4-1924939-4
2015 KL	4-1924939-3
2015 KL	4-1924939-2
WK-WD 2015	4-1924939-1
WK-WD 2015	4-1924939-0
WK-WD 2015	3-1924939-9
WK-WD 2015	3-1924939-8
WK-WD 2015	3-1924939-7
WK-WD 2015	3-1924939-6
2015 RT ENGINE HARNESS	3-1924939-5
2015 UF	3-1924939-4
2014 KL	3-1924939-3
2013 KL	3-1924939-2
CHRYSLER JC49	3-1924939-1
JS MY 2012 WORLD WO PZEV COMP	3-1924939-0
JS MY 2012 WORLD WO PZEV COMP	2-1924939-9
JS MY 2012 WORLD WO PZEV COMP	2-1924939-8
JS MY 2012 WORLD WO PZEV COMP	2-1924939-7
2012 LC	2-1924939-6
2012 LC	2-1924939-5
2012 LD & LX	2-1924939-4
2012 LC	2-1924939-3
CHRYSLER JC49 2011/12 HDLP PHOENIX, RT	2-1924939-2
PM/MK GPEC 2 ENG COMPARTMENT CONN	2-1924939-1
JS WORLD WO PZEV	2-1924939-0
JC49 POWER CONTROL UNIT	1-1924939-9
JC49 POWER CONTROL UNIT	1-1924939-8
JC49 POWER CONTROL UNIT	1-1924939-7
LC HLD-2011 LC	1-1924939-6
RT - TCM	1-1924939-5
JS HDLP & DASH CONN, 62 TE	1-1924939-4
JS HDLP & DASH CONN, 2.4L 40TES	1-1924939-3
JS HDLP & DASH CONN, 3.6L	1-1924939-2
JS HDLP & DASH CONN, 2.4L DDCT	1-1924939-1
LX HLD-2011 LC SI w TI10	1-1924939-0
LX HLD-2011 LC SI w TI10	1924939-9
PM/MK GPEC 2 ENG COMPARTMENT CONN	1924939-8
CHRYSLER JC - II WORLD ENG MTX LHD & RHD	1924939-7
CHRYSLER JC - II WORLD ENG ATX LHD CMU	1924939-6
CHRYSLER JC - II WORLD ENG ATX LHD BUX & RHD	1924939-5
CHRYSLER JC - II PHOENIX LHD CMU	1924939-4
CHRYSLER JC - II PHOENIX LHD BUX & RHD	1924939-3
HD/LP & DASH - ALL HLD	1924939-2
ALL OPEN	1924939-1

CAVITIES WITH A NUMERIC SYMBOL INDICATE CLOSED TERMINAL HOLE POSITIONS
BLANK CAVITIES INDICATE OPEN TERMINAL HOLE POSITIONS

PIN OUT CONFIGURATION TABLE 4

THIS DRAWING IS A CONTROLLED DOCUMENT.

DIMENSIONS: mm

TOLERANCES UNLESS OTHERWISE SPECIFIED:
0 PLC ±-
1 PLC ±-
2 PLC ±0.25
3 PLC ±-
4 PLC ±-
ANGLES ±-

MATERIAL - -
FINISH - -

DWN DJ HARDY 29NOV2007
CHK AJ VASBINDER 03DEC2007
APVD AJ VASBINDER 03DEC2007
PRODUCT SPEC TBD
APPLICATION SPEC - 8
WEIGHT -

TE Connectivity

NAME PLUG ASSEMBLY, 96 POSITION, INDEX A - RIGHT EXIT, SEALED, GPEC II

SIZE	CAGE CODE	DRAWING NO	RESTRICTED TO
A1	00779	C-1924939	-

CUSTOMER DRAWING SCALE 2:1 SHEET 2 OF 3 REV C10

4805 (3/13)

THIS DRAWING IS UNPUBLISHED. RELEASED FOR PUBLICATION 20
© COPYRIGHT 20 BY - ALL RIGHTS RESERVED.

REVISIONS

P	LTR	DESCRIPTION	DATE	DWN	APVD
	-	SEE SHEET 1	-	-	-

| | | |