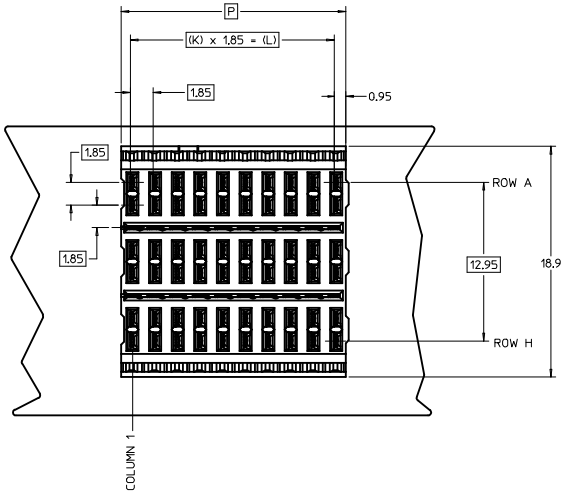

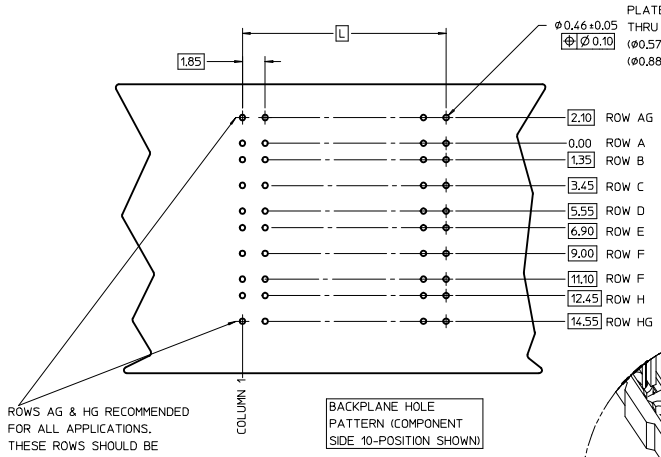

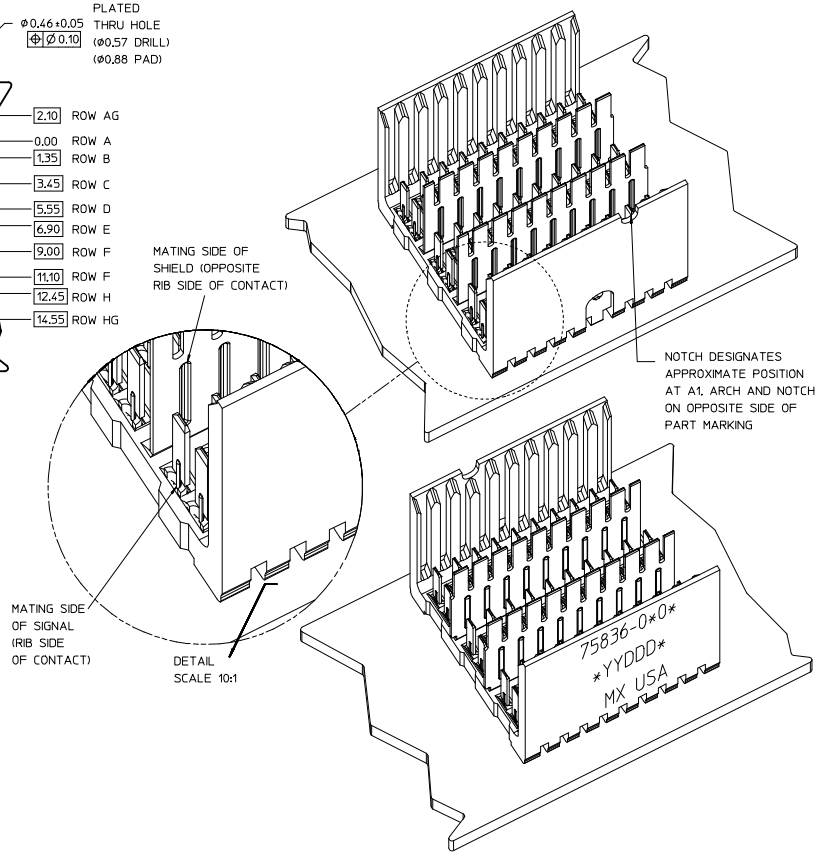

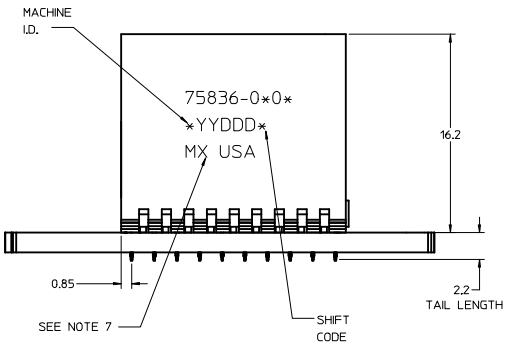

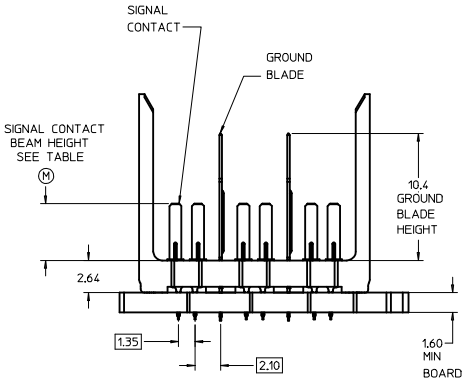

LEAD-FREE
PLATING ON
SIGNALS, & GROUNDS.

NOTES:

1. MATERIAL: HOUSING - LIQUID CRYSTAL POLYMER (LCP) GLASS-FILLED. UL 94V-0. COLOR - GRAY. SIGNAL CONTACT AND GROUND BLADE - HIGH PERFORMANCE COPPER ALLOY.
2. FINISHES: SELECTIVE GOLD (Au) 0.25 (MAPS), 0.76, OR 1.27 micrometers THICKNESS ON CONTACT AREA. SELECTIVE MATTE TIN (Sn) ON PCB TAILS. NICKEL (Ni) OVERALL.
3. THIS PART CONFORMS TO MOLEX PRODUCT SPECIFICATION PS-75221-999.
4. FOR MIXED CONTACT MATING LENGTHS CONSULT MOLEX FOR AVAILABILITY. CONTACT PAIRS MUST BE THE SAME LENGTH.
5. FOR SPECIFIC PART NUMBER AND MATING INFORMATION PLEASE REFER TO CHART.
6. PACKAGE PER PK-70873-576.
7. EITHER MARK PART NUMBER AND DATE CODE APPROXIMATELY WHERE SHOWN OR PLACE A LABEL ON THE TUBE.

75836-**0*

COLUMN
01 = 10 COL
02 = 25 COL
05 = 5 COL

KEYING
ORIENTATION
OPEN = 0 (NONE)

PIN LENGTH DIM "M"	GOLD (Au) THICKNESS micrometers
0=3.55 mm	0.25
1=4.55 mm	
2=5.55 mm	
3=3.55 mm	0.76
4=4.55 mm	
5=5.55 mm	
7=3.55 mm	1.27
8=4.55 mm	
9=5.55 mm	

PART NUMBER TABLE

ASSY PART NO.	K	L	P	TOTAL NO. OF DIFFERENTIAL PAIRS
75836-010*	9	16.65	18.35	30
75836-020*	24	44.40	46.10	75
75836-050*	4	7.40	9.10	15

ADD MAPS PLATING
EC NO: UCP2012-3688 2012/05/14
DRWN:MWOLFE 2012/05/14
CHKD:SDANNELLEY 2012/05/23
APPR:SMILLER
DESCRIPTION
REV C

QUALITY SYMBOLS: =0

GENERAL TOLERANCES (UNLESS SPECIFIED)

	mm	INCH
4 PLACES	± ---	± ---
3 PLACES	± ---	± ---
2 PLACES	± 0.25	± ---
1 PLACE	± 0.38	± ---
0 PLACE	±	±
ANGULAR	±---°	

DRAFT WHERE APPLICABLE MUST REMAIN WITHIN DIMENSIONS

DIMENSION STYLE: MM ONLY
SCALE
DESIGN UNITS: METRIC
THIRD ANGLE PROJECTION

		DATE
DRAWN BY	CTHOMAS	2006/01/13
CHECKED BY	KMULVEY	2006/01/16
APPROVED BY	JBINGHAM	2006/01/17

TITLE: GBX 3-PAIR OPEN END BACKPLANE ASSEMBLY LEAD-FREE SALES DRAWING

molex

MATERIAL NO.: SEE TABLE
DOCUMENT NO.: SD-75836-010
SHEET NO.: 1 OF 1
SIZE: D

THIS DRAWING CONTAINS INFORMATION THAT IS PROPRIETARY TO MOLEX INCORPORATED AND SHOULD NOT BE USED WITHOUT WRITTEN PERMISSION