PART NO.	DIM. "A" ±.015 (±0.4)
CDLCBST–3–01	3/16 (4.8)
CDLCBST–4–01	1/4 (6.4)
CDLCBST–5–01	5/16 (7.9)
CDLCBST–6–01	3/8 (9.5)
CDLCBST–7–01	7/16 (11.1)
CDLCBST–8–01	1/2 (12.7)
CDLCBST–9–01	9/16 (14.3)
CDLCBST–10–01	5/8 (15.9)

AVAILABLE BY SPECIAL ORDER ONLY

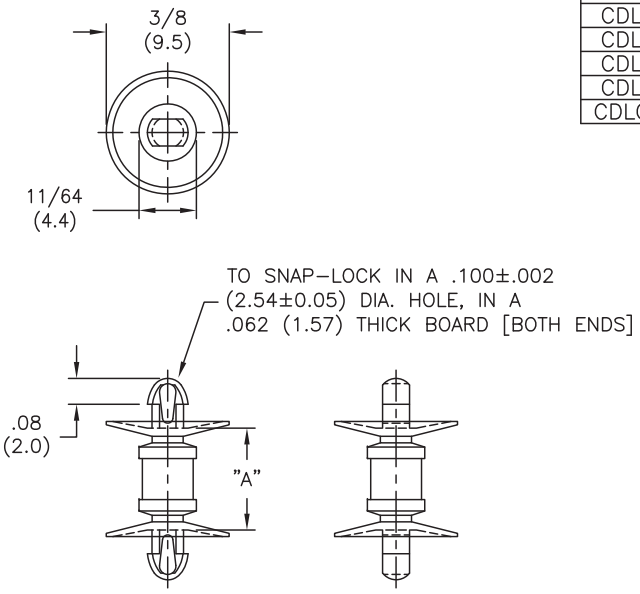

NOTES:
1. MATERIAL: NYLON 6/6 (RMS–01).
   FLAME RETARDANT, NYLON (RMS–19),
   AVAILABLE BY SPECIAL ORDER ONLY.
2. COLOR: NATURAL.

REV	DESCRIPTION	ENGR DATE
E	SEE ECN #862 FOR CHANGES	SM 10.04.04
D	SEE ECN #474 FOR CHANGES	SM 09.30.02
C	CHANGED FILE NO. AND TITLE BLOCK.	SM 04.27.01
B	MAT'L RMS–19 ADDED	J.L. 12.19.97
A	CONVERTED TO ACAD	PB 06.20.94

TITLE: CUPPED DUAL LOCKING CKT.BD. SUPPORT, TEARDROP

DWG IN IN (MM)

TOLERANCES UNLESS NOTED
.XX=±.010
.XXX=±.005
FRAC=±1/64
ANG=±1°

FILE # CDLCBST
MAT'L: SEE NOTES
RE: RICHCO, INC.

DWN: P.B.
APP:
DT: 06–20–94
DT:

RICHCO INC.
PO BOX 804238,CHICAGO,60680
(773) 539–4060

FINAL

PART # SEE TABLE

PRINT TYPE CA