used for: DIN EN 60603-2 TYPE "C 1/2"

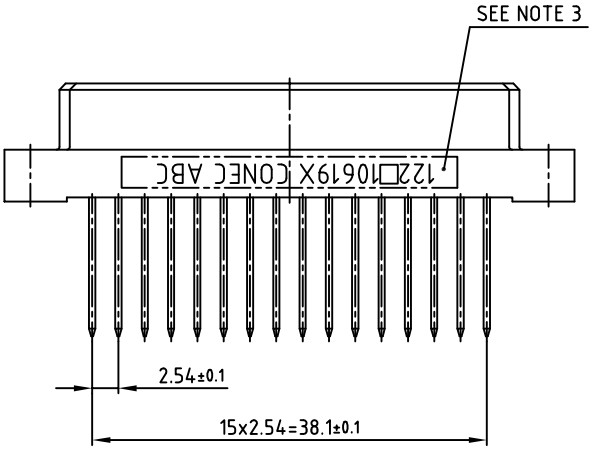

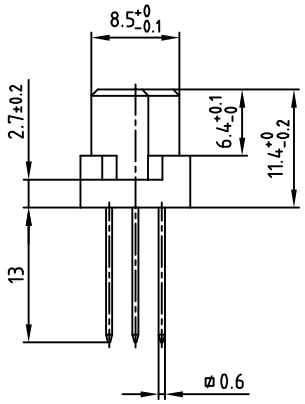

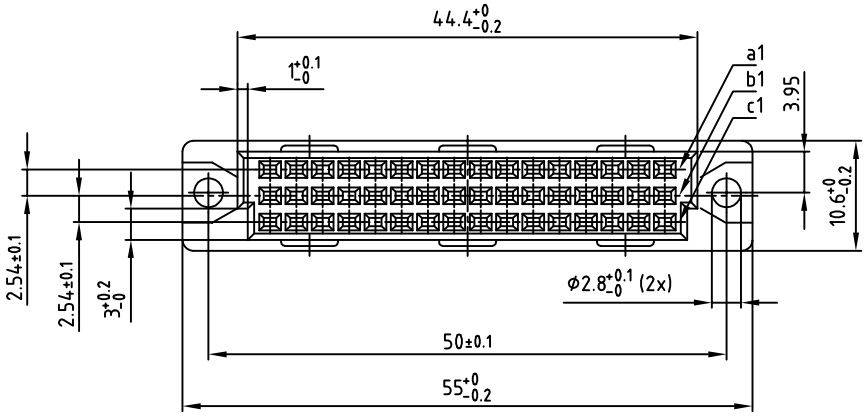

NOTES:

1. INSULATORS: PBT UL 94 V-0, GREY
2. CONTACTS: COPPER ALLOY; PLATING (SEE PART NO.):
   - ☐PLEASE ADD A for GOLD over NICKEL; 50 MATING CYCLES
   - ☐PLEASE ADD B for GOLD over NICKEL; 400 MATING CYCLES
   - ☐PLEASE ADD C for GOLD over NICKEL; 500 MATING CYCLES
3. CONNECTOR IS PART MARKED: 122☐10619X CONEC ABC

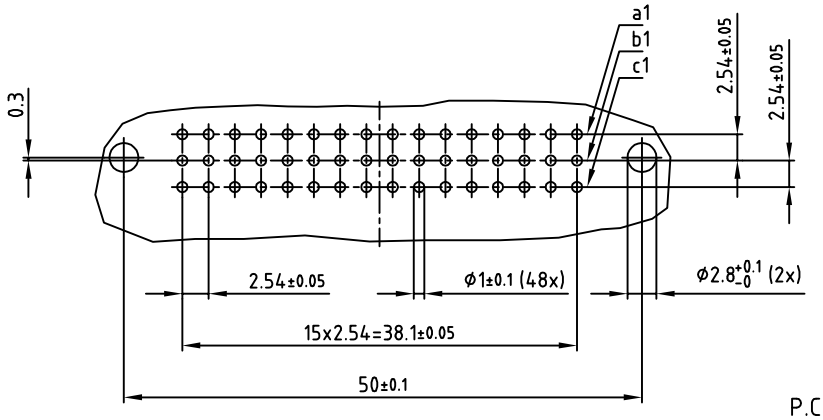

P.C.B. HOLE DRILLINGS

Directive 2002/95/EC RoHS compliant

THIS DRAWING MAY NOT BE COPIED OR REPRODUCED IN ANY WAY, AND MAY NOT BE PASSED ON TO A THIRD PARTY WITHOUT WRITTEN PERMISSION. OWNERSHIP AND COPYRIGHT OF CONEC GmbH
DO NOT ALTER CAD DRAWING BY HAND

rev.	description	date	name
a	Original		

tolerance — dim. in mm

	date	name
2014		
drawn	15.07.	Henneboel
appd.	16.07.	Lehmenkühler
norm	DIN EN 60603-2	
d-old		

CONEC®

scale: 2:1
material: SEE NOTES

title:
FEMALE CONNECTOR TYPE "C 1/2"
48pos.
WIRE WRAP

dwg no: 12K1A829
DIN-A 3
sh: 1/1

part no: 122☐10619X (see note 2)