Alle Rechte vorbehalten/ *All rights reserved*

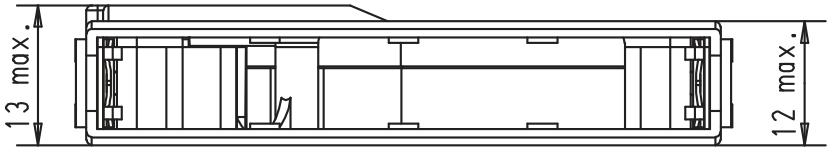

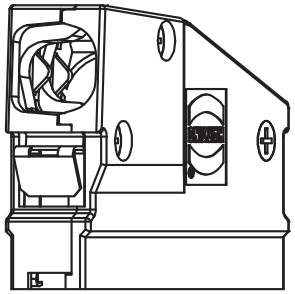

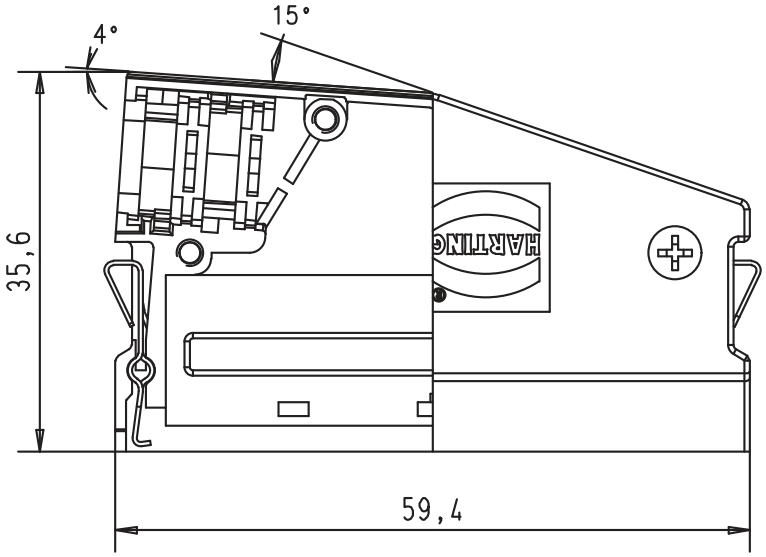

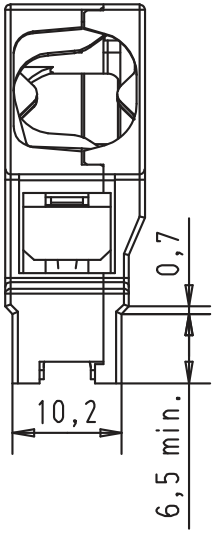

Cable dimensions | min:10 mm
max:12 mm

				Dat.	Name
			Detail.	21 JUN 01	S G
			Insp.		
			Stand.		
29686	21 JUN 01	S G			
Mod.	Dat.	Name			

All Dim. in mm
Orig. Size DIN A 4

HARTING EURL
F-95972 Paris

har.mik®

Metal hood 68 poles
large cable side entry

TB 60 03 068 0655

Sub.

Maßstab/ *Scale* 1,5:1

Blatt/ *Page* 1/1