Alle Rechte vorbehalten/ *All rights reserved*

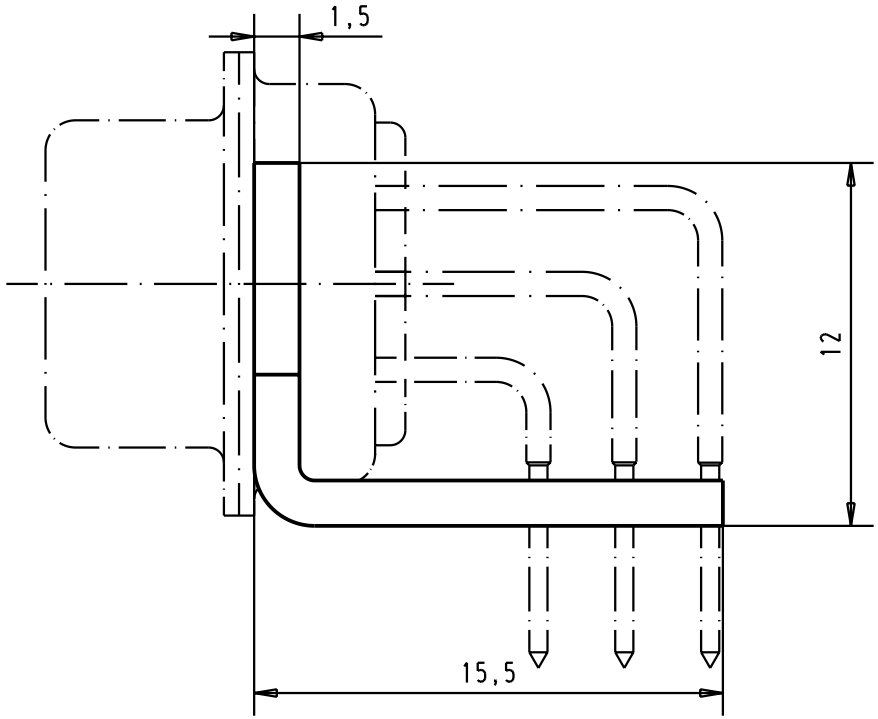

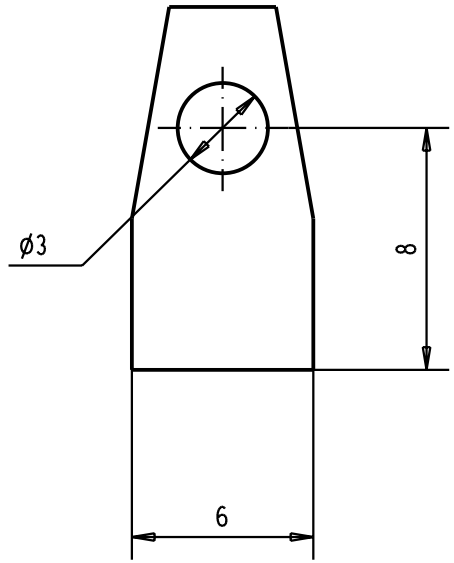

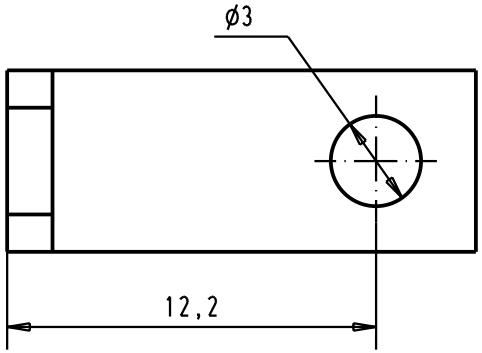

							Dat.	Name		D-Sub, Fixing metal bracket 50 poles	Maßstab/ *Scale*
						Detail.	09-APR-02	CV	All Dim. in mm Orig. Size DIN A 4		4:1
						Insp.					
						Stand.					
09 67 000 9911						HARTING EURL F-95972 Paris				TB 09670009911	Blatt/ *Page*
			29768	09-APR-02	CV						1
Part number			Mod.	Dat.	Name					Sub.	