C-171509

1 OBSOLETE PARTS: OBSOLETE CIS STREAMLINING PER D.RENAUD/D.SINISI

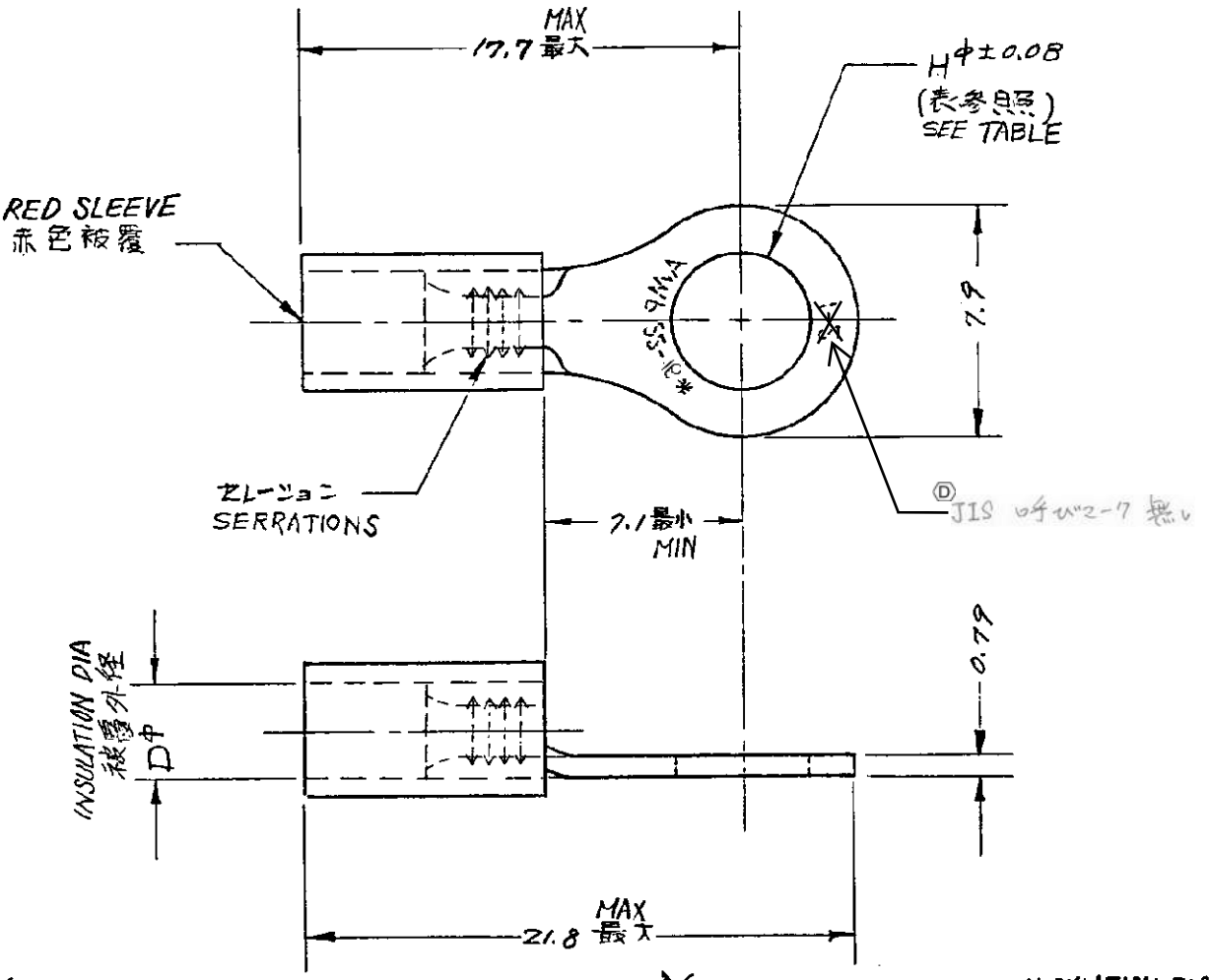

	P/N 型番	STUD スタッド	H φ	INSULATION DIA 被覆外径 D φ	P/N 型番	STUD スタッド	H φ	INSULATION DIA 被覆外径 D φ
D OBSOLETE	~~171509-1~~	#6	3.68	2.03 ~ 3.05	1 ~~171509-6~~	#10	5	2.66 ~ 3.56
OBSOLETE	~~-2~~	#8	4.34	2.03 ~ 3.05	~~-7~~	5 mm	D 5.2	2.03 ~ 3.05
OBSOLETE	~~-3~~	~~#10~~	~~5~~	~~2.03 ~ 3.05~~	E ~~-8~~	5 mm	5.26	2.66 ~ 3.56
OBSOLETE	~~-4~~	#6	3.68	2.66 ~ 3.56	1 ~~171509-9~~	SPEC.	5.79	2.03 ~ 3.05
OBSOLETE	~~171509-5~~	#8	4.34	2.66 ~ 3.56				

LTR.	変更 (REVISION RECORD)	DR.	CHK.	DATE
D	Change Applicable Body	Y.O	N.Y	23JAN17
C2	REV PER ECO-10-000444	KK	AEG	08JAN 10
C1	REVISED ECR-05-006866	Y.Y	D.M	15JUL '05
C	-3 OBSOLETED (FJ00-1754-93)	Y.I	S.M	12/19 '94
B	ADDED MARK	H.S	H.N	8/11/75
A	REVISED (P-DWG REV. A)	H.S	H.N	7/1/75
0	RELEASED (P-DWG REV. 0)	[illegible]	[illegible]	2/14/75
E	OBSOLETE	Y.O	N.Y	14APR17
F	REVISED PER ECR-17-007066	T.G	N.Y	26MAY17

DR. 2/14/75 [illegible] DES. T. Sugishi 2/13/75
CHK. J. Gobeau 2/14/75 APP. [illegible] 2/14/75

参考図面 (CUSTOMER COPY REFERENCE ONLY)

材料 MATERIAL: COPPER 銅系合金
仕上 (FINISH): ANNEAL TIN PL 焼なまし 錫めっき
適合電線範囲 (WIRE RANGE): 0.26 ~ 1.04 mm² (AWG #22-16)
適合被覆外径 INSULATION DIA: SEE TABLE 表参照 mm (IN)
一般公差 (TOLERANCE EXCEPT AS NOTED): ±0.4 ±1°
尺度 SCALE: 4:1
LOC: J SIZE: A 図番 NO: C-171509 REV.: F
名称 (NAME): 丸型端子 WIRE TERMINAL ASSEMBLY

TE Connectivity

クラス CLASS: —
形式 TYPE: PLASTI-GRIP プラスティグリップ

単位：粍 DIMENSIONS IN MM

PRINT DIST

AMP-J 030-1
REV. 7-72