DRAWING MADE IN THIRD ANGLE PROJECTION

680849 680849

/home/amp16926/edmmod

PART NUMBER	REV	FIRST USED
680849-1	B	122500-1
680849-2	B	565435-5
680849-3	B	354500-1

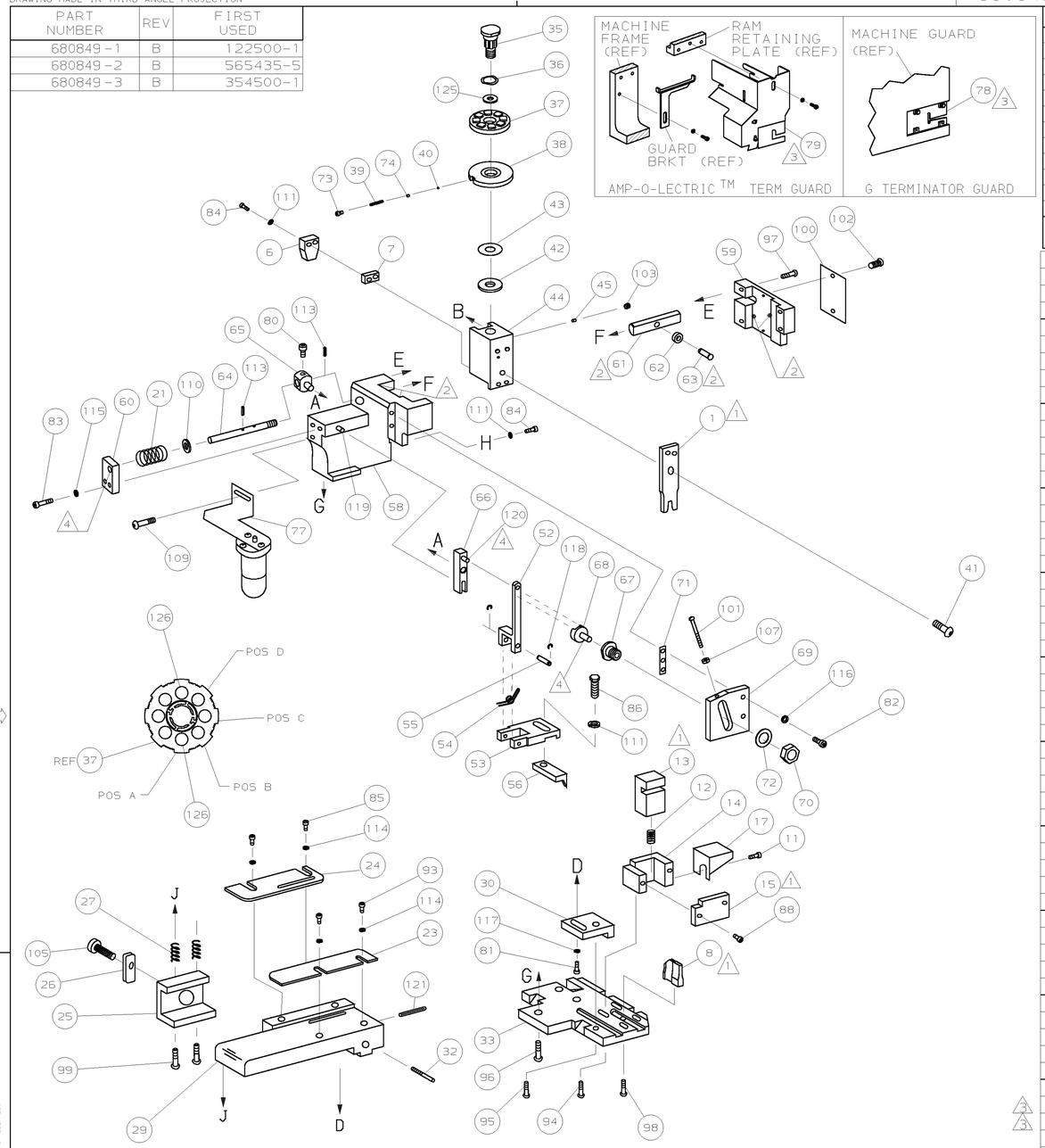

TERMINAL NAME: TERMI-FOIL, DOUBLE FACE, OPEN BARREL TERMINAL

TERMINAL
696114-1

CRIMPING DATA

PAD LTR	CRIMP HEIGHT	WIRE SIZE
A	.041 ±.002 [1.04 ±0.05mm]	20
B	.038 ±.002 [0.97 ±0.05mm]	22
C	.036 ±.002 [0.91 ±0.05mm]	24
D	NOT	USED

CRIMP	SIZE	TYPE	RANGE
WIRE	.070 [1.78mm]	F	24-20
INSUL	-	-	-

WIRE STRIP LENGTH	TERM APPL SPEC	FEED	APPL INSTRUCTION	SET UP GAGE	LAYOUT
.140-.156	NONE	.750	408-8040	458637-1	L2263

-3	-2	-1	U/M	DWG SIZE	PART NO	DESCRIPTION	ITEM NO
							129
2	2	2	-	C	5-354779-3	PIN, WIRE DISC (.3255)C	128
2	2	2	-	C	4-354779-9	PIN, WIRE DISC (.3235)B	127
2	2	2	-	C	4-354779-1	PIN, WIRE DISC (.3195)A	126
1	1	1	-	A	986950-1	WASHER, FLAT PRECISION	125
1	1	1	-	A	217238-1	GENERAL INSTRUCTION PACKAGE	124
1	1	1	-	-	4088040	SF APPL INST 408-8040	123
							122
1	1	1	-	A	4-21028-0	PIN, SLOTTED SPRING	121
1	1	1	-	A	1-21030-1	PIN,DOWEL(ø.187x.50)LEVER	120
1	1	1	-	A	1-21030-6	PIN,DOWEL(ø.187x1.25)HOUSING	119
2	2	2	-	A	21045-3	RING,RET "C"(ø.187)FD FING PIN	118
1	1	1	-	A	21024-5	WASHER, LOCK(#10)ADJ BLOCK	117
1	1	1	-	A	21024-5	WASHER,LOCK(#10)ADJ PLATE	116
1	1	1	-	A	21024-5	WASHER,LOCK(#10)FEED GDE ROD	115
2	2	2	-	A	21024-2	WASHER,LOCK(#4)FRONT STP GUIDE	114
2	2	2	-	A	5-21028-1	PIN,SLT SPR(ø.125x.50)ADJ ROD	113
							112
4	4	4	-	A	21024-4	WASHER,LOCK(#8)STRIPPER	111
1	1	1	-	A	21899-4	WASHER,FLAT(ø5/16)SCREW ADJ	110
-	1	-	-	A	2-21002-6	SCR,BHC(10-32x.38)LUBE ASSY	109
							108
1	1	1	-	A	21018-5	NUT,HEX(6-32)FEED ADJ	107
							106
1	1	1	-	A	22353-8	SCR,SHLD(.187x.25)DG LEVER	105
							104
1	1	1	-	A	21009-2	SCR,SKT SET(1/4-20x.25 LW)RAM	103
2	2	2	-	A	21017-2	SCR,DRIVE(#2x.19)ID PLATE	102
1	1	1	-	A	6-23715-5	SCR,PAN HD(6-32x1.50)FEED ADJ	101
1	1	1	-	B	461264-1	PLATE, IDENTIFICATION	100
2	2	2	-	A	5-21006-6	SCR,SET,10-32 X .75	99
1	1	1	-	A	22733-8	SCR,BHC(8-32x.38 LW)ANVIL	98
4	4	4	-	A	2-21002-9	SCR,BHC(10-32x.75)CAP	97
3	3	3	-	A	2-22733-8	SCR,BHC(1/4-20x.62)HOUSING	96
1	1	1	-	A	2-21002-7	SCR,BHC(10-32x.50)SG ADJ BLOCK	95
4	4	4	-	A	2-21002-2	SCR,BHC(8-32x.50)TERM H DWN	94
2	2	2	-	A	1-21000-4	SCR,BHC(8-32x.38)F ST GUIDE	93
							92
1	1	1	-	A	1-21002-7	SCR,BHC(6-32x.38)CAM	91
							90
							89
2	2	2	-	A	1-21000-8	SCR,SHC(6-32x.50)R SHEAR PLATE	88
							87
1	1	1	-	A	2-22603-0	SCR,HEX HD(8-32x.31)FEED FINGER	86
2	2	2	-	A	1-21000-3	SCR,SHC(4-40x.25)R ST GUIDE	85
3	3	3	-	A	3-21000-0	SCR,SHC(8-32x.50)STRIPPER	84
2	2	2	-	A	3-21000-7	SCR,SHC(10-32x.75)FEED ROD GD	83
2	2	2	-	A	3-21000-6	SCR,SHC(10-32x.62)FD ADJ BLK	82
1	1	1	-	A	3-21000-4	SCR,SHC(10-32x.38)SG ADJ BL	81
REF	REF	REF	-	A	3-21000-4	SCR,SHC(10-32x.38)PIVOT BLK	80
-	REF	-	-	B	455749-1	GUARD, WINDOW	79
REF	-	-	-	B	679532-1	INSERT, GUARD	78
-	1	-	-	C	1-465184-0	LUBRICATOR ASSY	77
							76
							75
1	1	1	-	A	690603-1	SPRING, ASSIST	74
1	1	1	-	A	23030-1	SCR,SHC(6-32x.25 SL)INS DISC	73
REF	REF	REF	-	A	458109-1	WASHER, SPECIAL	72
REF	REF	REF	-	A	690517-1	SPACER	71

QTY REQD PER ASSY — PARTS LIST

-1	LEADMAKER	MECH POST FEED
-2	BENCH MODEL K	MECH PRE FEED
-3	BENCH MODEL G	MECH PRE FEED

-3	-2	-1	U/M	DWG SIZE	PART NO	DESCRIPTION	ITEM NO
1	1	1	-	B	22594-8	NUT,HEX(1/2-20)	70
1	1	1	-	B	240628-1	PLATE, ADJUSTMENT	69
1	1	1	-	B	240626-1	SHAFT, PIVOT	68
1	1	1	-	B	240633-1	BUSHING	67
1	1	1	-	A	455680-1	LEVER, INTERMEDIATE	66
1	1	1	-	B	240629-1	BLOCK, PIVOT	65
1	1	1	-	A	240632-2	SCREW, ADJ FEED ROD	64
1	1	1	-	B	240659-3	PIN, CAM ROLLER	63
1	1	1	-	B	240658-1	ROLLER, CAM	62
1	1	1	-	B	454398-2	ROD, FEED	61
1	1	1	-	A	454178-1	GUIDE, FEED ROD	60
1	1	1	-	C	454220-1	CAP, RAM	59
1	1	1	-	D	454485-3	HOUSING	58
							57
1	1	1	-	B	694433-2	PAWL, FEED	56
1	1	1	-	B	240624-1	PIN, FEED FINGER	55
1	1	1	-	B	691499-1	SPRING, FEED FINGER	54
1	1	1	-	B	690541-1	HOLDER, FEED FINGER	53
1	1	1	-	A	455679-1	LEVER, TERMINAL FEED ARM	52
							51
							50
1	-	-	-	B	690602-6	CAM, PRE-FEED 1 5/8 ST	49
-	1	-	-	B	690602-5	CAM, PRE-FEED 1 1/8 ST	48
-	-	1	-	B	690501-4	CAM, POST-FEED 1 5/8 ST	47
1	1	1	-	B	459456-1	APPLICATOR, BASIC (SUBASSY)	46
1	1	1	-	A	690191-1	PLUG, NYLON	45
1	1	1	-	C	455673-1	RAM	44
1	1	1	-	A	690125-1	WASHER, LAMINATED	43
1	1	1	-	A	690124-1	WASHER, RAM	42
1	1	1	-	A	7-21002-9	BOLT, CRIMPER(5/16x1.00)	41
1	1	1	-	A	23241-6	BALL, STEEL	40
1	1	1	-	A	690170-1	SPRING, COMPRESSION	39
1	1	1	-	C	690142-1	DISC, INSULATION	38
1	1	1	-	D	354777-1	WIRE DISC, PLASTIC	37
1	1	1	-	A	22480-5	WASHER, SPRING	36
1	1	1	-	B	690212-1	POST, RAM	35
							34
1	1	1	-	D	462504-4	PLATE, BASE	33
1	1	1	-	D	690432-3	SCREW, ADJUSTMENT	32
							31
1	1	1	-	B	455689-1	BLOCK, STRIP GUIDE ADJ	30
1	1	1	-	C	1-844048-0	PLATE, STRIP GUIDE	29
							28
2	2	2	-	A	1-22284-0	SPRING, DRAG	27
1	1	1	-	B	240793-1	LEVER, DRAG RELEASE	26
1	1	1	-	B	240792-1	DRAG, TERMINAL	25
1	1	1	-	D	690438-1	GUIDE, STRIP (REAR)	24
1	1	1	-	A	189124-2	GUIDE, STRIP (FRONT)	23
1	1	1	-	B	690472-2	STRIPPER	22
1	1	1	-	A	4-22284-9	SPRING, FEED RETURN	21
							20
							19
							18
1	1	1	-	A	691668-1	GUARD, CHIP (REAR)	17
							16
1	1	1	-	B	690464-9	PLATE, SHEAR (REAR)	15
1	1	1	-	B	1-690462-0	HOLDER, SHEAR (REAR)	14
1	1	1	-	C	1-690463-0	SHEAR, FLOAT (REAR)	13
1	1	1	-	A	5-22280-0	SPRING, SHEAR	12
1	1	1	-	B	1-690461-8	STOP, SHEAR	11
							10
							9
1	1	1	-	C	1-805887-6	ANVIL	8
1	1	1	-	C	7-240641-7	SPACER, DEPRESSOR (REAR)	7
1	1	1	-	A	690468-2	DEPRESSOR, SHEAR (REAR)	6
							5
							4
							3
							2
1	1	1	-	C	1338001-1	CRIMPER, WIRE	1

REVISION OF EACH ASSY NO (WHEN BLANK, USE DWG REVISION)

QTY REQD PER ASSY — PARTS LIST

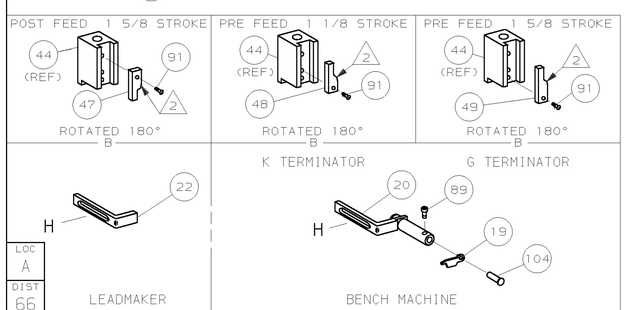

1. RECOMMENDED SPARE PARTS.
2. GREASE LIGHTLY.
3. GUARD MUST BE IN PLACE WHEN OPERATING APPLICATOR IN A BENCH MACHINE.
4. LUBRICATE DAILY USING NO. 20 MACHINE OIL.
5. ITEMS WITH QTY OF REF SPECIFIED (EXCEPT ITEMS 78 AND 79) ARE USED ON ITEM 46.

P	F	LTR	REVISION RECORD	APP	DATE
		B	ECN 0150-0837-01	TE	8-01
		A	REVISED	MEH	8-99

DIMENSIONS IN INCHES. DO NOT SCALE PRINT.
TOLERANCES UNLESS OTHERWISE SPECIFIED:
2 PLC DEC ±-
3 PLC DEC ±-
4 PLC DEC ±-
ANGLES ±-
SURFACE TEXTURE: √
REMOVE BURRS, BREAK SHARP EDGES R.015 MAX

MATL - HT TR - FIN -

DR 14JUL99 B.HIGMAN APP 14JUL99 T.ELBIN
CHK 14JUL99 C.ERISMAN REL - -

AMP Incorporated Harrisburg, PA 17105-3608

NAME SIDE FEED HDM APPLICATOR — MACHINE REF MINI APPL

SCALE - SIZE D DWG NO 680849 SHEET 1 OF 1 REV B

CAGE CODE 00779 — CUSTOMER AND ASSEMBLY DRAWING — RESTRICTED TO -

LOC A DIST 66

AMP 1756 REV 3-92 21-AUG-01 09:23:42 amp16926

THIS DRAWING IS A CONTROLLED DOCUMENT.
RELEASED FOR PUBLICATION AUG 27,1999
BY AMP INCORPORATED. ALL RIGHTS RESERVED.
© COPYRIGHT 1999