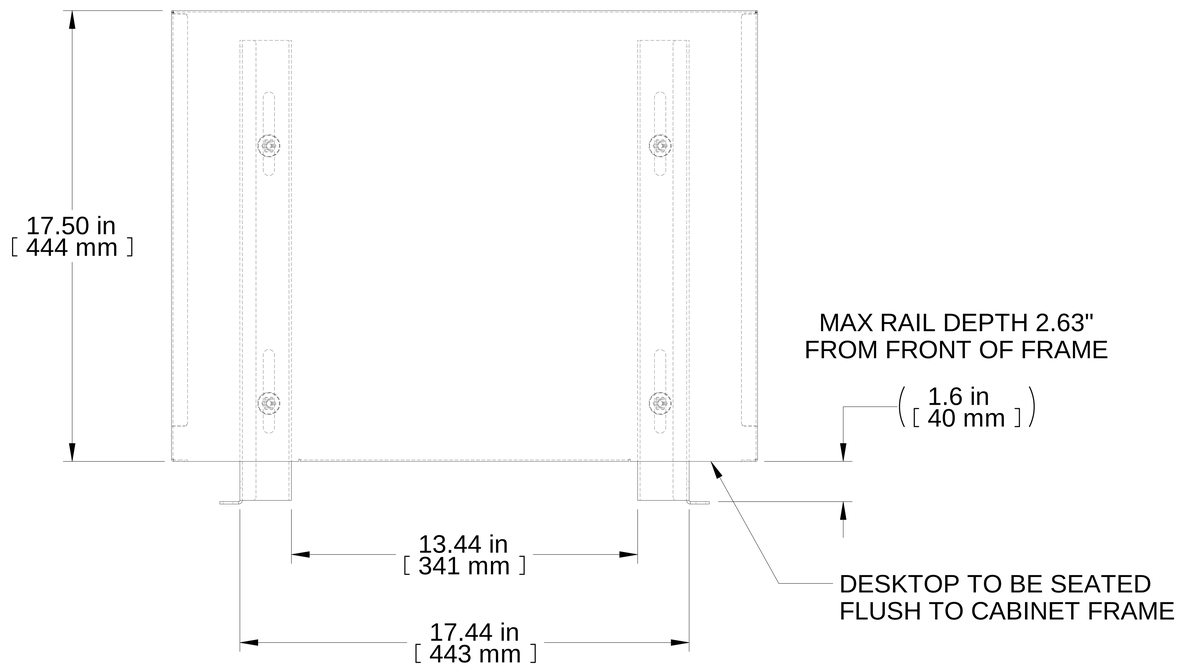

TOP VIEW

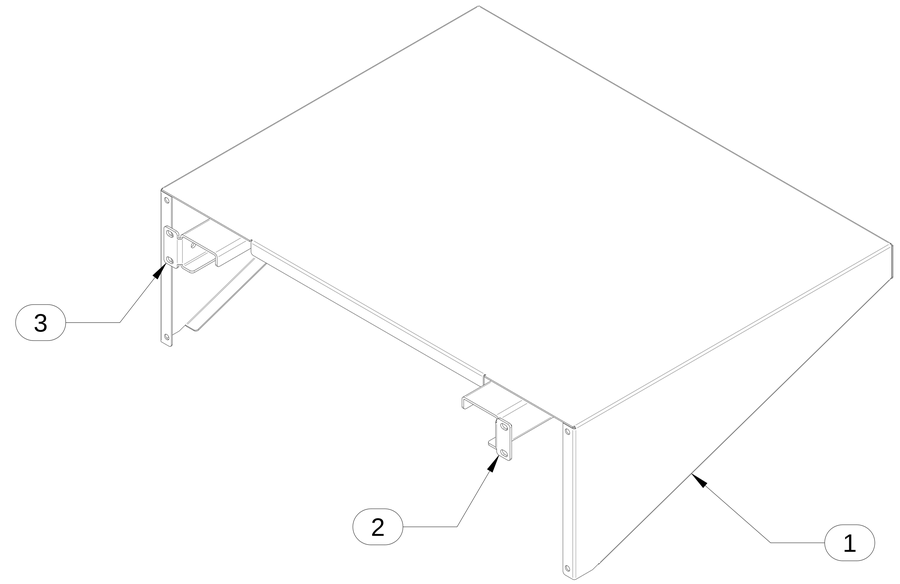

ISOMETRIC

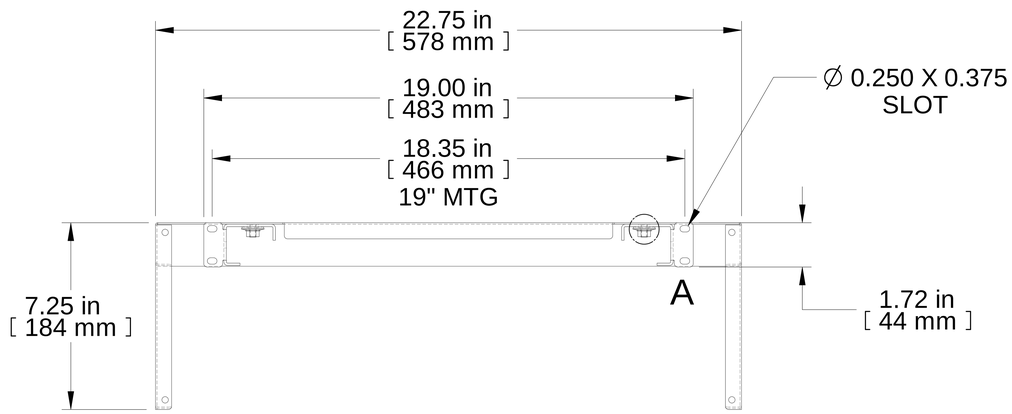

FRONT VIEW

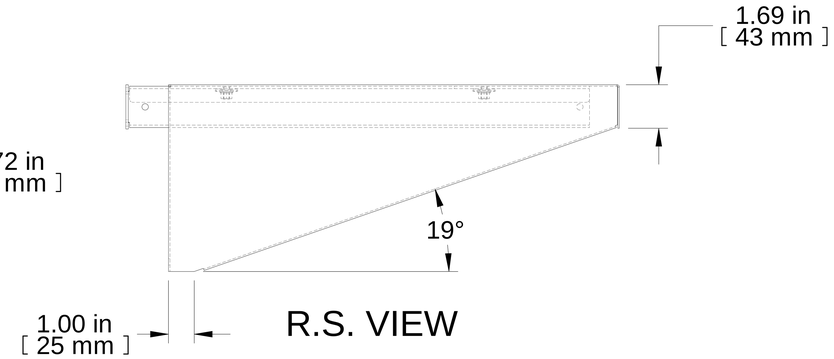

R.S. VIEW

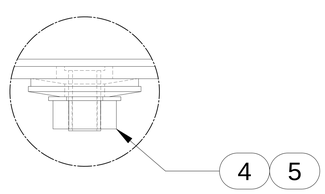

DETAIL A

Item Number	Title	Quantity
1	RACK DESK - TOP PANEL ASS'Y	1
2	RACK DESK MTG BRACKET (LH)	1
3	RACK DESK MTG BRACKET (RH)	1
4	NUT 1/4-20 KEP	4
5	WSHR.434ID X.875OD NEO/GALST	4

PART NUMBERS

RMD1923BK	PAINTED BLACK TEXTURED

NOTES

Mounting hardware not Included mounting to rails

See Hammond Website for More Information

Français

Pour tous les détails sur nos produits,
svp veuillez consulter notre site www.hammondmfg.com

Data subject to change without notice. Isometric drawing not to scale.
Les données sont sujettes à changement sans préavis.

HAMMOND MANUFACTURING®

www.hammondmfg.com

PART NO. **RMD1923BK**