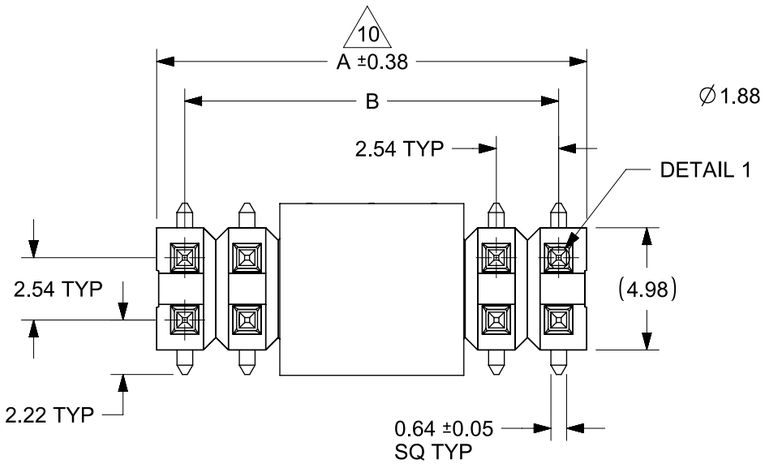

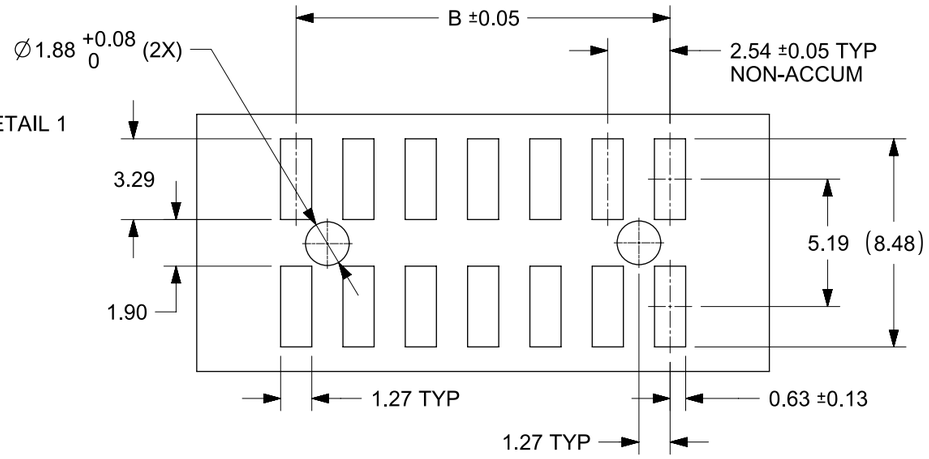

RECOMMENDED PCB LAYOUT

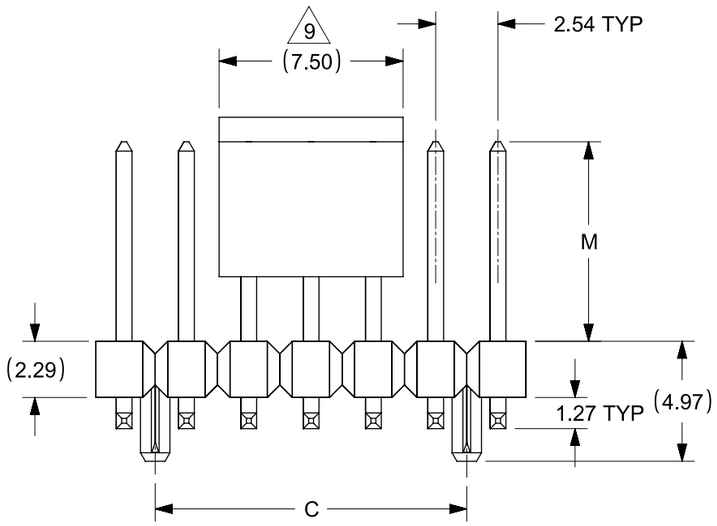

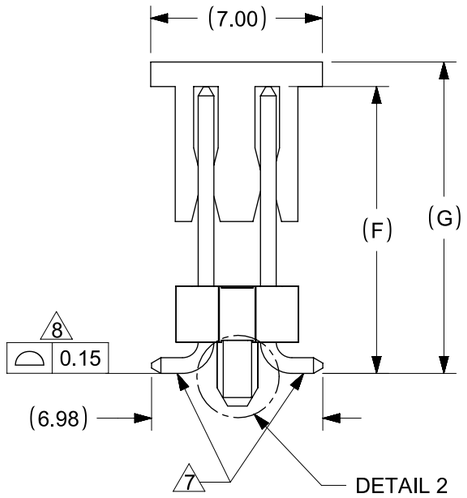

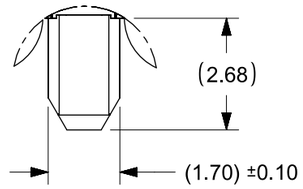

DETAIL 2

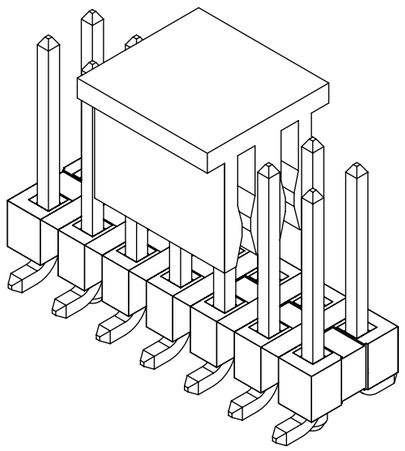

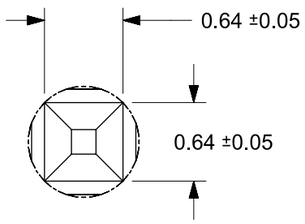

DETAIL 1

NOTES:
1. MATERIAL:
HSG: LCP, GLASS-FILLED, UL94V-0,COLOR: BLACK
CAP: NYLON, GLASS-FILLED, UL94V-0, COLOR: BLACK
PIN: 0.64MM SQ, COPPER ALLOY
2. PLATING TYPE:
(1) 0.05µm MIN. GOLD PLATE ON CONTACT AND
2.50µm MIN. TIN ON SOLDERTAIL OVER
1.25µm MIN. NICKEL OVERALL.
(2) 0.38µm MIN. GOLD PLATE ON CONTACT AND
2.00µm MIN. TIN ON SOLDERTAIL OVER
1.25µm MIN. NICKEL OVERALL.
(3) 0.75µm MIN. GOLD PLATE ON CONTACT AND
2.00µm MIN. TIN ON SOLDERTAIL OVER
1.25µm MIN. NICKEL OVERALL.
(4) 2.50µm MIN. TIN OVERALL
1.25µm MIN. NICKEL OVERALL
3. PACKAGING TYPE: SEE TABLE
4. PCB THICKNESS 1.60+/-0.10mm
5. PRODUCT SPECIFICATION: PS-87920-019
6. WAFER TO BE FLAT WITHIN 0.003 mm/mm
7. BEND DEPRESSION IS ACCEPTED SO LONG AS IT DOES NOT AFFECT THE OVERALL COPLANARITY OF TAIL
8. COPLANARITY IS TO BE MEASURED BY RESTING THE SOLDER TAIL ON A FLAT SURFACE
9. CAP LOCATION IS CENTERED ALONG THE MATING ENDS AS SHOWN. TOP SURFACE OF CAP TO BE FLAT FOR THE PURPOSE OF PICK & PLACE BY VACUUM SUCTION NOZZLE
10. IRREGULAR CIRCUIT CUTOFF WITHIN BREAKAWAY SECTION IS PERMISSIBLE. CUTTING OR CHIPPING OF THE MAIN BODY IS NOT ACCEPTABLE
11. PARTS ARE NOT STACKABLE ON 2.54 CENTER
12. THE ABOVE CKT 14 IS FOR ILLUSTRATION PURPOSE ONLY
13. TUBE LENGTH IS 560MM PER STANDARD
14. PACKAGING SPECIFICATION:
TRAY: PK-89990-489
TUBE: PK-89990-507
TAPE & REEL: PK-89990-479

THIS DRAWING CONTAINS INFORMATION THAT IS PROPRIETARY TO MOLEX ELECTRONIC TECHNOLOGIES, LLC AND SHOULD NOT BE USED WITHOUT WRITTEN PERMISSION

DIMENSION UNITS	SCALE
mm	NTS

GENERAL TOLERANCES (UNLESS SPECIFIED)

ANGULAR TOL	±	3.0 °
4 PLACES	±	
3 PLACES	±	
2 PLACES	±	0.2
1 PLACE	±	
0 PLACES	±	

DRAFT WHERE APPLICABLE MUST REMAIN WITHIN DIMENSIONS

CURRENT REV DESC:

EC NO: 698212
DRWN: DANUSA 2022/01/21
CHK'D: DANUSA 2022/03/04
APPR: MRAMAKRISHNA 2022/03/04

INITIAL REVISION:
DRWN: SKLIM01 2007/02/09
APPR: KWLEE 2007/02/14

THIRD ANGLE PROJECTION | DRAWING: A3-SIZE | SERIES: 87920

molex

CUSTOM HEADER
2.54MM PITCH DUAL ROW HEADER, SINGLE WAFER SMT

PRODUCT CUSTOMER DRAWING

DOCUMENT NUMBER	DOC TYPE	DOC PART	REVISION
SD-87920-050	PSD	001	A5

MATERIAL NUMBER	CUSTOMER	SHEET NUMBER
SEE TABLE	GENERAL MARKET	1 OF 10

DOCUMENT STATUS	P1	RELEASE DATE	2022/03/04 09:01:09

FORMAT: master-sd-rock-A3
REVISION: H
DATE: 2018/01/16

CIRCUITS POSITION CONFIGURATION

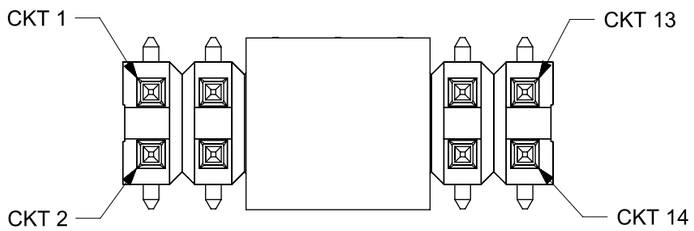

PART WITHOUT PEG & CAP VERSION

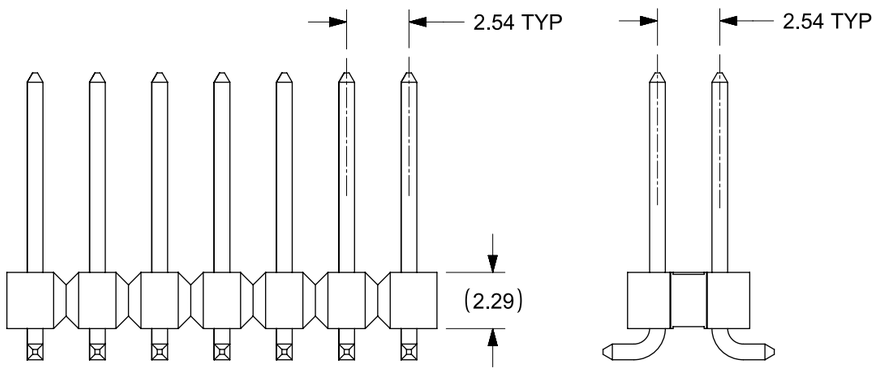

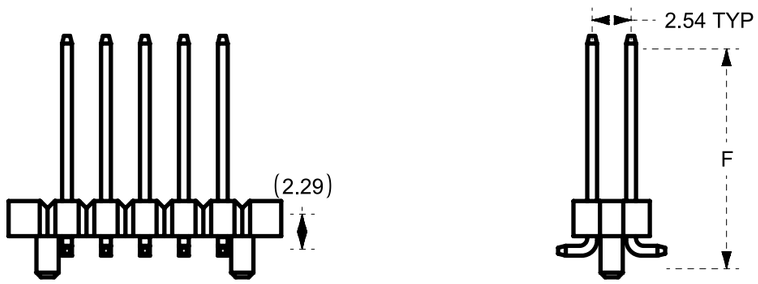

CAP POSITION FOR 87920-0807

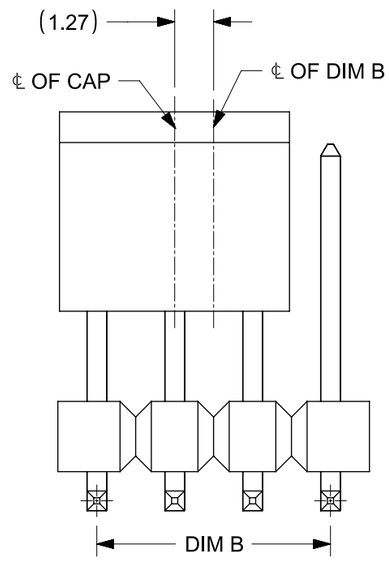

PART WITHOUT CAP WITH PEGS PACK IN TUBE ORIENTATION (FOR REFERENCE USED ONLY)

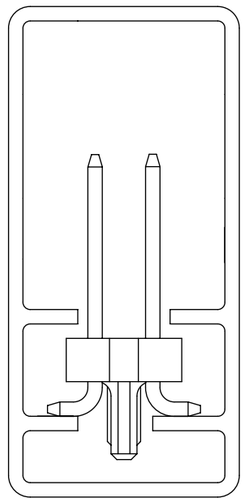

THIS DRAWING CONTAINS INFORMATION THAT IS PROPRIETARY TO MOLEX ELECTRONIC TECHNOLOGIES, LLC AND SHOULD NOT BE USED WITHOUT WRITTEN PERMISSION

DIMENSION UNITS	SCALE
mm	NTS

GENERAL TOLERANCES (UNLESS SPECIFIED)

ANGULAR TOL	±	3.0 °
4 PLACES	±	
3 PLACES	±	
2 PLACES	±	0.2
1 PLACE	±	
0 PLACES	±	

DRAFT WHERE APPLICABLE MUST REMAIN WITHIN DIMENSIONS

CURRENT REV DESC:

EC NO: 698212
DRWN: DANUSA 2022/01/21
CHK'D: DANUSA 2022/03/04
APPR: MRAMAKRISHNA 2022/03/04

INITIAL REVISION:
DRWN: SKLIM01 2007/02/09
APPR: KWLEE 2007/02/14

THIRD ANGLE PROJECTION | DRAWING: A3-SIZE | SERIES: 87920

molex

CUSTOM HEADER
2.54MM PITCH DUAL ROW HEADER, SINGLE WAFER SMT

PRODUCT CUSTOMER DRAWING

DOCUMENT NUMBER	DOC TYPE	DOC PART	REVISION
SD-87920-050	PSD	001	A5

MATERIAL NUMBER	CUSTOMER	SHEET NUMBER
SEE TABLE	GENERAL MARKET	2 OF 10

DOCUMENT STATUS	P1	RELEASE DATE	2022/03/04 09:01:09

FORMAT: molex_SD_A3
REVISION: H
DATE: 2018/01/16

PART NUMBER IN PACKAGING OPTION			CKT SIZE	PEG	PLATE OPT.	DIMENSION					
WITH CAP IN TAPE & REEL	W/O CAP IN TRAY	WITH CAP IN TRAY				A	B	C	G	F	M
87920-0427	87920-0461	87920-0465	04	N	1	5.08	2.54	-	12.69	11.69	8.13
87920-0428	87920-0462	87920-0466	04	N	2	5.08	2.54	-	12.69	11.69	8.13
87920-0429	87920-0463	87920-0467	04	N	3	5.08	2.54	-	12.69	11.69	8.13
87920-0430	87920-0464	87920-0468	04	N	4	5.08	2.54	-	12.69	11.69	8.13
87920-0627	87920-0661	87920-0665	06	N	1	7.62	5.08	-	12.69	11.69	8.13
87920-0628	87920-0662	87920-0666	06	N	2	7.62	5.08	-	12.69	11.69	8.13
87920-0629	87920-0663	87920-0667	06	N	3	7.62	5.08	-	12.69	11.69	8.13
87920-0630	87920-0664	87920-0668	06	N	4	7.62	5.08	-	12.69	11.69	8.13

PART NUMBER IN PACKAGING OPTION			CKT SIZE	PEG	PLATE OPT.	DIMENSION					
W/O CAP IN TRAY	-	WITH CAP IN TRAY				A	B	C	G	F	M
87920-0447	-	87920-0485	04	N	1	5.08	2.54	-	15.23	14.23	10.67
87920-0448	-	87920-0486	04	N	2	5.08	2.54	-	15.23	14.23	10.67
87920-0449	-	87920-0487	04	N	3	5.08	2.54	-	15.23	14.23	10.67
87920-0450	-	87920-0488	04	N	4	5.08	2.54	-	15.23	14.23	10.67
87920-0647	-	87920-0685	06	N	1	7.62	5.08	-	15.23	14.23	10.67
87920-0648	-	87920-0686	06	N	2	7.62	5.08	-	15.23	14.23	10.67
87920-0649	-	87920-0687	06	N	3	7.62	5.08	-	15.23	14.23	10.67
87920-0650	-	87920-0688	06	N	4	7.62	5.08	-	15.23	14.23	10.67

PART NUMBER IN PACKAGING OPTION			CKT SIZE	PEG	PLATE OPT.	DIMENSION					
WITH CAP IN TAPE & REEL	W/O CAP IN TRAY	WITH CAP IN TUBE				A	B	C	G	F	M
87920-0827	87920-0861	87920-0865	08	N	1	10.16	7.62	-	12.69	11.69	8.13
87920-0828	87920-0862	87920-0866	08	N	2	10.16	7.62	-	12.69	11.69	8.13
87920-0829	87920-0863	87920-0867	08	N	3	10.16	7.62	-	12.69	11.69	8.13
87920-0830	87920-0864	87920-0868	08	N	4	10.16	7.62	-	12.69	11.69	8.13
87920-0837	87920-0871	87920-0875	08	Y	1	10.16	7.62	5.08	12.69	11.69	8.13
87920-0838	87920-0872	87920-0876	08	Y	2	10.16	7.62	5.08	12.69	11.69	8.13
87920-0839	87920-0873	87920-0877	08	Y	3	10.16	7.62	5.08	12.69	11.69	8.13
87920-0840	87920-0874	87920-0878	08	Y	4	10.16	7.62	5.08	12.69	11.69	8.13
87920-0807	87920-0884	87920-0888	08	N	4	10.16	7.62	-	15.23	14.23	10.67
87920-0808	87920-0894	87920-0898	08	Y	4	10.16	7.62	5.08	15.23	14.23	10.67

PART NUMBER IN PACKAGING OPTION			CKT SIZE	PEG	PLATE OPT.	DIMENSION					
W/O CAP IN TRAY	W/O CAP IN TUBE	WITH CAP IN TUBE				A	B	C	G	F	M
87920-0847	87920-0881	87920-0885	08	N	1	10.16	7.62	-	15.23	14.23	10.67
87920-0848	87920-0882	87920-0886	08	N	2	10.16	7.62	-	15.23	14.23	10.67
87920-0849	87920-0883	87920-0887	08	N	3	10.16	7.62	-	15.23	14.23	10.67
87920-0850	87920-0884	87920-0888	08	N	4	10.16	7.62	-	15.23	14.23	10.67
87920-0857	87920-0891	87920-0895	08	Y	1	10.16	7.62	5.08	15.23	14.23	10.67
87920-0858	87920-0892	87920-0896	08	Y	2	10.16	7.62	5.08	15.23	14.23	10.67
87920-0859	87920-0893	87920-0897	08	Y	3	10.16	7.62	5.08	15.23	14.23	10.67
87920-0860	87920-0894	87920-0898	08	Y	4	10.16	7.62	5.08	15.23	14.23	10.67

87920-0807 : REFER TO SHEET 2 FOR CAP LOCATION

THIS DRAWING CONTAINS INFORMATION THAT IS PROPRIETARY TO MOLEX ELECTRONIC TECHNOLOGIES, LLC AND SHOULD NOT BE USED WITHOUT WRITTEN PERMISSION

DIMENSION UNITS	SCALE
mm	NTS

GENERAL TOLERANCES (UNLESS SPECIFIED)

ANGULAR TOL	±	3.0 °
4 PLACES	±	
3 PLACES	±	
2 PLACES	±	0.2
1 PLACE	±	
0 PLACES	±	

DRAFT WHERE APPLICABLE MUST REMAIN WITHIN DIMENSIONS

CURRENT REV DESC:

EC NO: 698212
DRWN: DANUSA 2022/01/21
CHK'D: DANUSA 2022/03/04
APPR: MRAMAKRISHNA 2022/03/04

INITIAL REVISION:
DRWN: SKLIM01 2007/02/09
APPR: KWLEE 2007/02/14

THIRD ANGLE PROJECTION | DRAWING: A3-SIZE | SERIES: 87920

molex

CUSTOM HEADER
2.54MM PITCH DUAL ROW HEADER, SINGLE WAFER SMT

PRODUCT CUSTOMER DRAWING

DOCUMENT NUMBER	DOC TYPE	DOC PART	REVISION
SD-87920-050	PSD	001	A5

MATERIAL NUMBER	CUSTOMER	SHEET NUMBER
SEE TABLE	GENERAL MARKET	3 OF 10

DOCUMENT STATUS	P1	RELEASE DATE	2022/03/04 09:01:09

FORMAT: master-drawing-A3
REVISION: H
DATE: 2018/01/16

PART NUMBER IN PACKAGING OPTION			CKT SIZE	PEG	PLATE OPT.	DIMENSION					
WITH CAP IN TAPE & REEL	W/O CAP IN TUBE	WITH CAP IN TUBE				A	B	C	G	F	M
87920-0310	-	-	10	N	4	12.70	10.16	-	15.35	14.33	10.77
87920-1027	87920-1061	87920-1065	10	N	1	12.70	10.16	-	12.69	11.69	8.13
87920-1028	87920-1062	87920-1066	10	N	2	12.70	10.16	-	12.69	11.69	8.13
87920-1029	87920-1063	87920-1067	10	N	3	12.70	10.16	-	12.69	11.69	8.13
87920-1030	87920-1064	87920-1068	10	N	4	12.70	10.16	-	12.69	11.69	8.13
87920-1037	87920-1071	87920-1075	10	Y	1	12.70	10.16	7.62	12.69	11.69	8.13
87920-1038	87920-1072	87920-1076	10	Y	2	12.70	10.16	7.62	12.69	11.69	8.13
87920-1039	87920-1073	87920-1077	10	Y	3	12.70	10.16	7.62	12.69	11.69	8.13
87920-1040	87920-1074	87920-1078	10	Y	4	12.70	10.16	7.62	12.69	11.69	8.13
87920-1227	87920-1261	87920-1265	12	N	1	15.24	12.70	-	12.69	11.69	8.13
87920-1228	87920-1262	87920-1266	12	N	2	15.24	12.70	-	12.69	11.69	8.13
87920-1229	87920-1263	87920-1267	12	N	3	15.24	12.70	-	12.69	11.69	8.13
87920-1230	87920-1264	87920-1268	12	N	4	15.24	12.70	-	12.69	11.69	8.13
87920-1237	87920-1271	87920-1275	12	Y	1	15.24	12.70	10.16	12.69	11.69	8.13
87920-1238	87920-1272	87920-1276	12	Y	2	15.24	12.70	10.16	12.69	11.69	8.13
87920-1239	87920-1273	87920-1277	12	Y	3	15.24	12.70	10.16	12.69	11.69	8.13
87920-1240	87920-1274	87920-1278	12	Y	4	15.24	12.70	10.16	12.69	11.69	8.13
87920-1427	87920-1461	87920-1465	14	N	1	17.78	15.24	-	12.69	11.69	8.13
87920-1428	87920-1462	87920-1466	14	N	2	17.78	15.24	-	12.69	11.69	8.13
87920-1429	87920-1463	87920-1467	14	N	3	17.78	15.24	-	12.69	11.69	8.13
87920-1430	87920-1464	87920-1468	14	N	4	17.78	15.24	-	12.69	11.69	8.13
87920-1437	87920-1471	87920-1475	14	Y	1	17.78	15.24	12.70	12.69	11.69	8.13
87920-1438	87920-1472	87920-1476	14	Y	2	17.78	15.24	12.70	12.69	11.69	8.13
87920-1439	87920-1473	87920-1477	14	Y	3	17.78	15.24	12.70	12.69	11.69	8.13
87920-1440	87920-1474	87920-1478	14	Y	4	17.78	15.24	12.70	12.69	11.69	8.13

PART NUMBER IN PACKAGING OPTION		CKT SIZE	VOID	PEG	PLATE OPT.	DIMENSION					
WITH CAP IN TAPE & REEL	WITH-OUT CAP IN TAPE & REEL					A	B	C	G	F	M
-	A5 87920-0312	14	1,2,13,14	Y	4	17.78	15.24	12.70	-	14.33	10.77

PART NUMBER IN PACKAGING OPTION			CKT SIZE	PEG	PLATE OPT.	DIMENSION					
W/O CAP IN TRAY	W/O CAP IN TUBE	WITH CAP IN TUBE				A	B	C	G	F	M
87920-1047	87920-1081	87920-1085	10	N	1	12.70	10.16	-	15.23	14.23	10.67
87920-1048	87920-1082	87920-1086	10	N	2	12.70	10.16	-	15.23	14.23	10.67
87920-1049	87920-1083	87920-1087	10	N	3	12.70	10.16	-	15.23	14.23	10.67
87920-1050	87920-1084	87920-1088	10	N	4	12.70	10.16	-	15.23	14.23	10.67
87920-1057	87920-1091	87920-1095	10	Y	1	12.70	10.16	7.62	15.23	14.23	10.67
87920-1058	87920-1092	87920-1096	10	Y	2	12.70	10.16	7.62	15.23	14.23	10.67
87920-1059	87920-1093	87920-1097	10	Y	3	12.70	10.16	7.62	15.23	14.23	10.67
87920-1060	87920-1094	87920-1098	10	Y	4	12.70	10.16	7.62	15.23	14.23	10.67
87920-1247	87920-1281	87920-1285	12	N	1	15.24	12.70	-	15.23	14.23	10.67
87920-1248	87920-1282	87920-1286	12	N	2	15.24	12.70	-	15.23	14.23	10.67
87920-1249	87920-1283	87920-1287	12	N	3	15.24	12.70	-	15.23	14.23	10.67
87920-1250	87920-1284	87920-1288	12	N	4	15.24	12.70	-	15.23	14.23	10.67
87920-1257	87920-1291	87920-1295	12	Y	1	15.24	12.70	10.16	15.23	14.23	10.67
87920-1258	87920-1292	87920-1296	12	Y	2	15.24	12.70	10.16	15.23	14.23	10.67
87920-1259	87920-1293	87920-1297	12	Y	3	15.24	12.70	10.16	15.23	14.23	10.67
87920-1260	87920-1294	87920-1298	12	Y	4	15.24	12.70	10.16	15.23	14.23	10.67
87920-1447	87920-1481	87920-1485	14	N	1	17.78	15.24	-	15.23	14.23	10.67
87920-1448	87920-1482	87920-1486	14	N	2	17.78	15.24	-	15.23	14.23	10.67
87920-1449	87920-1483	87920-1487	14	N	3	17.78	15.24	-	15.23	14.23	10.67
87920-1450	87920-1484	87920-1488	14	N	4	17.78	15.24	-	15.23	14.23	10.67
87920-1457	87920-1491	87920-1495	14	Y	1	17.78	15.24	12.70	15.23	14.23	10.67
87920-1458	87920-1492	87920-1496	14	Y	2	17.78	15.24	12.70	15.23	14.23	10.67
87920-1459	87920-1493	87920-1497	14	Y	3	17.78	15.24	12.70	15.23	14.23	10.67
87920-1460	87920-1494	87920-1498	14	Y	4	17.78	15.24	12.70	15.23	14.23	10.67

THIS DRAWING CONTAINS INFORMATION THAT IS PROPRIETARY TO MOLEX ELECTRONIC TECHNOLOGIES, LLC AND SHOULD NOT BE USED WITHOUT WRITTEN PERMISSION

DIMENSION UNITS	SCALE
mm	NTS

GENERAL TOLERANCES (UNLESS SPECIFIED)

ANGULAR TOL	± 3.0 °
4 PLACES	±
3 PLACES	±
2 PLACES	± 0.2
1 PLACE	±
0 PLACES	±

DRAFT WHERE APPLICABLE MUST REMAIN WITHIN DIMENSIONS

CURRENT REV DESC:

EC NO: 698212
DRWN: DANUSA 2022/01/21
CHK'D: DANUSA 2022/03/04
APPR: MRAMAKRISHNA 2022/03/04

INITIAL REVISION:
DRWN: SKLIM01 2007/02/09
APPR: KWLEE 2007/02/14

THIRD ANGLE PROJECTION | DRAWING: A3-SIZE | SERIES: 87920

molex

CUSTOM HEADER
2.54MM PITCH DUAL ROW HEADER, SINGLE WAFER SMT

PRODUCT CUSTOMER DRAWING

DOCUMENT NUMBER	DOC TYPE	DOC PART	REVISION
SD-87920-050	PSD	001	A5

MATERIAL NUMBER	CUSTOMER	SHEET NUMBER
SEE TABLE	GENERAL MARKET	4 OF 10

DOCUMENT STATUS	P1	RELEASE DATE	2022/03/04 09:01:09

FORMAT: mass-Stock-A3
REVISION: H
DATE: 2018/01/16

PART NUMBER IN PACKAGING OPTION			CKT SIZE	PEG	PLATE OPT.	DIMENSION					
WITH CAP IN TAPE & REEL	W/O CAP IN TUBE	WITH CAP IN TUBE				A	B	C	G	F	M
87920-1627	87920-1661	87920-1665	16	N	1	20.32	17.78	-	12.69	11.69	8.13
87920-1628	87920-1662	87920-1666	16	N	2	20.32	17.78	-	12.69	11.69	8.13
87920-1629	87920-1663	87920-1667	16	N	3	20.32	17.78	-	12.69	11.69	8.13
87920-1630	87920-1664	87920-1668	16	N	4	20.32	17.78	-	12.69	11.69	8.13
87920-1637	87920-1671	87920-1675	16	Y	1	20.32	17.78	15.24	12.69	11.69	8.13
87920-1638	87920-1672	87920-1676	16	Y	2	20.32	17.78	15.24	12.69	11.69	8.13
87920-1639	87920-1673	87920-1677	16	Y	3	20.32	17.78	15.24	12.69	11.69	8.13
87920-1640	87920-1674	87920-1678	16	Y	4	20.32	17.78	15.24	12.69	11.69	8.13
87920-1827	87920-1861	87920-1865	18	N	1	22.86	20.32	-	12.69	11.69	8.13
87920-1828	87920-1862	87920-1866	18	N	2	22.86	20.32	-	12.69	11.69	8.13
87920-1829	87920-1863	87920-1867	18	N	3	22.86	20.32	-	12.69	11.69	8.13
87920-1830	87920-1864	87920-1868	18	N	4	22.86	20.32	-	12.69	11.69	8.13
87920-1837	87920-1871	87920-1875	18	Y	1	22.86	20.32	17.78	12.69	11.69	8.13
87920-1838	87920-1872	87920-1876	18	Y	2	22.86	20.32	17.78	12.69	11.69	8.13
87920-1839	87920-1873	87920-1877	18	Y	3	22.86	20.32	17.78	12.69	11.69	8.13
87920-1840	87920-1874	87920-1878	18	Y	4	22.86	20.32	17.78	12.69	11.69	8.13
87920-2027	87920-2061	87920-2065	20	N	1	25.40	22.86	-	12.69	11.69	8.13
87920-2028	87920-2062	87920-2066	20	N	2	25.40	22.86	-	12.69	11.69	8.13
87920-2029	87920-2063	87920-2067	20	N	3	25.40	22.86	-	12.69	11.69	8.13
87920-2030	87920-2064	87920-2068	20	N	4	25.40	22.86	-	12.69	11.69	8.13
87920-2037	87920-2071	87920-2075	20	Y	1	25.40	22.86	20.32	12.69	11.69	8.13
87920-2038	87920-2072	87920-2076	20	Y	2	25.40	22.86	20.32	12.69	11.69	8.13
87920-2039	87920-2073	87920-2077	20	Y	3	25.40	22.86	20.32	12.69	11.69	8.13
87920-2040	87920-2074	87920-2078	20	Y	4	25.40	22.86	20.32	12.69	11.69	8.13

PART NUMBER IN PACKAGING OPTION			CKT SIZE	PEG	PLATE OPT.	DIMENSION					
W/O CAP IN TRAY	W/O CAP IN TUBE	WITH CAP IN TUBE				A	B	C	G	F	M
87920-1647	87920-1681	87920-1685	16	N	1	20.32	17.78	-	15.23	14.23	10.67
87920-1648	87920-1682	87920-1686	16	N	2	20.32	17.78	-	15.23	14.23	10.67
87920-1649	87920-1683	87920-1687	16	N	3	20.32	17.78	-	15.23	14.23	10.67
87920-1650	87920-1684	87920-1688	16	N	4	20.32	17.78	-	15.23	14.23	10.67
87920-1657	87920-1691	87920-1695	16	Y	1	20.32	17.78	15.24	15.23	14.23	10.67
87920-1658	87920-1692	87920-1696	16	Y	2	20.32	17.78	15.24	15.23	14.23	10.67
87920-1659	87920-1693	87920-1697	16	Y	3	20.32	17.78	15.24	15.23	14.23	10.67
87920-1660	87920-1694	87920-1698	16	Y	4	20.32	17.78	15.24	15.23	14.23	10.67
87920-1847	87920-1881	87920-1885	18	N	1	22.86	20.32	-	15.23	14.23	10.67
87920-1848	87920-1882	87920-1886	18	N	2	22.86	20.32	-	15.23	14.23	10.67
87920-1849	87920-1883	87920-1887	18	N	3	22.86	20.32	-	15.23	14.23	10.67
87920-1850	87920-1884	87920-1888	18	N	4	22.86	20.32	-	15.23	14.23	10.67
87920-1857	87920-1891	87920-1895	18	Y	1	22.86	20.32	17.78	15.23	14.23	10.67
87920-1858	87920-1892	87920-1896	18	Y	2	22.86	20.32	17.78	15.23	14.23	10.67
87920-1859	87920-1893	87920-1897	18	Y	3	22.86	20.32	17.78	15.23	14.23	10.67
87920-1860	87920-1894	87920-1898	18	Y	4	22.86	20.32	17.78	15.23	14.23	10.67
87920-2047	87920-2081	87920-2085	20	N	1	25.40	22.86	-	15.23	14.23	10.67
87920-2048	87920-2082	87920-2086	20	N	2	25.40	22.86	-	15.23	14.23	10.67
87920-2049	87920-2083	87920-2087	20	N	3	25.40	22.86	-	15.23	14.23	10.67
87920-2050	87920-2084	87920-2088	20	N	4	25.40	22.86	-	15.23	14.23	10.67
87920-2057	87920-2091	87920-2095	20	Y	1	25.40	22.86	20.32	15.23	14.23	10.67
87920-2058	87920-2092	87920-2096	20	Y	2	25.40	22.86	20.32	15.23	14.23	10.67
87920-2059	87920-2093	87920-2097	20	Y	3	25.40	22.86	20.32	15.23	14.23	10.67
87920-2060	87920-2094	87920-2098	20	Y	4	25.40	22.86	20.32	15.23	14.23	10.67

THIS DRAWING CONTAINS INFORMATION THAT IS PROPRIETARY TO MOLEX ELECTRONIC TECHNOLOGIES, LLC AND SHOULD NOT BE USED WITHOUT WRITTEN PERMISSION

DIMENSION UNITS	SCALE
mm	NTS

GENERAL TOLERANCES (UNLESS SPECIFIED)

ANGULAR TOL	± 3.0 °
4 PLACES	±
3 PLACES	±
2 PLACES	± 0.2
1 PLACE	±
0 PLACES	±

DRAFT WHERE APPLICABLE MUST REMAIN WITHIN DIMENSIONS

CURRENT REV DESC:

EC NO: 698212
DRWN: DANUSA 2022/01/21
CHK'D: DANUSA 2022/03/04
APPR: MRAMAKRISHNA 2022/03/04

INITIAL REVISION:
DRWN: SKLIM01 2007/02/09
APPR: KWLEE 2007/02/14

THIRD ANGLE PROJECTION | DRAWING: A3-SIZE | SERIES: 87920

molex

CUSTOM HEADER
2.54MM PITCH DUAL ROW HEADER, SINGLE WAFER SMT

PRODUCT CUSTOMER DRAWING

DOCUMENT NUMBER	DOC TYPE	DOC PART	REVISION
SD-87920-050	PSD	001	A5

MATERIAL NUMBER	CUSTOMER	SHEET NUMBER
SEE TABLE	GENERAL MARKET	5 OF 10

DOCUMENT STATUS	P1	RELEASE DATE	2022/03/04 09:01:09

FORMAT: mass-Stock-A3
REVISION: H
DATE: 2018/01/16

PART NUMBER IN PACKAGING OPTION			CKT SIZE	PEG	PLATE OPT.	DIMENSION					
WITH CAP IN TAPE & REEL	W/O CAP IN TUBE	WITH CAP IN TUBE				A	B	C	G	F	M
87920-2227	87920-2261	87920-2265	22	N	1	27.94	25.40	-	12.69	11.69	8.13
87920-2228	87920-2262	87920-2266	22	N	2	27.94	25.40	-	12.69	11.69	8.13
87920-2229	87920-2263	87920-2267	22	N	3	27.94	25.40	-	12.69	11.69	8.13
87920-2230	87920-2264	87920-2268	22	N	4	27.94	25.40	-	12.69	11.69	8.13
87920-2237	87920-2271	87920-2275	22	Y	1	27.94	25.40	22.86	12.69	11.69	8.13
87920-2238	87920-2272	87920-2276	22	Y	2	27.94	25.40	22.86	12.69	11.69	8.13
87920-2239	87920-2273	87920-2277	22	Y	3	27.94	25.40	22.86	12.69	11.69	8.13
87920-2240	87920-2274	87920-2278	22	Y	4	27.94	25.40	22.86	12.69	11.69	8.13
87920-2427	87920-2461	87920-2465	24	N	1	30.48	27.94	-	12.69	11.69	8.13
87920-2428	87920-2462	87920-2466	24	N	2	30.48	27.94	-	12.69	11.69	8.13
87920-2429	87920-2463	87920-2467	24	N	3	30.48	27.94	-	12.69	11.69	8.13
87920-2430	87920-2464	87920-2468	24	N	4	30.48	27.94	-	12.69	11.69	8.13
87920-2437	87920-2471	87920-2475	24	Y	1	30.48	27.94	25.40	12.69	11.69	8.13
87920-2438	87920-2472	87920-2476	24	Y	2	30.48	27.94	25.40	12.69	11.69	8.13
87920-2439	87920-2473	87920-2477	24	Y	3	30.48	27.94	25.40	12.69	11.69	8.13
87920-2440	87920-2474	87920-2478	24	Y	4	30.48	27.94	25.40	12.69	11.69	8.13
87920-2627	87920-2661	87920-2665	26	N	1	33.02	30.48	-	12.69	11.69	8.13
87920-2628	87920-2662	87920-2666	26	N	2	33.02	30.48	-	12.69	11.69	8.13
87920-2629	87920-2663	87920-2667	26	N	3	33.02	30.48	-	12.69	11.69	8.13
87920-2630	87920-2664	87920-2668	26	N	4	33.02	30.48	-	12.69	11.69	8.13
87920-2637	87920-2671	87920-2675	26	Y	1	33.02	30.48	27.94	12.69	11.69	8.13
87920-2638	87920-2672	87920-2676	26	Y	2	33.02	30.48	27.94	12.69	11.69	8.13
87920-2639	87920-2673	87920-2677	26	Y	3	33.02	30.48	27.94	12.69	11.69	8.13
87920-2640	87920-2674	87920-2678	26	Y	4	33.02	30.48	27.94	12.69	11.69	8.13

PART NUMBER IN PACKAGING OPTION			CKT SIZE	PEG	PLATE OPT.	DIMENSION					
W/O CAP IN TRAY	W/O CAP IN TUBE	WITH CAP IN TUBE				A	B	C	G	F	M
87920-2247	87920-2281	87920-2285	22	N	1	27.94	25.40	-	15.23	14.23	10.67
87920-2248	87920-2282	87920-2286	22	N	2	27.94	25.40	-	15.23	14.23	10.67
87920-2249	87920-2283	87920-2287	22	N	3	27.94	25.40	-	15.23	14.23	10.67
87920-2250	87920-2284	87920-2288	22	N	4	27.94	25.40	-	15.23	14.23	10.67
87920-2257	87920-2291	87920-2295	22	Y	1	27.94	25.40	22.86	15.23	14.23	10.67
87920-2258	87920-2292	87920-2296	22	Y	2	27.94	25.40	22.86	15.23	14.23	10.67
87920-2259	87920-2293	87920-2297	22	Y	3	27.94	25.40	22.86	15.23	14.23	10.67
87920-2260	87920-2294	87920-2298	22	Y	4	27.94	25.40	22.86	15.23	14.23	10.67
87920-2447	87920-2481	87920-2485	24	N	1	30.48	27.94	-	15.23	14.23	10.67
87920-2448	87920-2482	87920-2486	24	N	2	30.48	27.94	-	15.23	14.23	10.67
87920-2449	87920-2483	87920-2487	24	N	3	30.48	27.94	-	15.23	14.23	10.67
87920-2450	87920-2484	87920-2488	24	N	4	30.48	27.94	-	15.23	14.23	10.67
87920-2457	87920-2491	87920-2495	24	Y	1	30.48	27.94	25.40	15.23	14.23	10.67
87920-2458	87920-2492	87920-2496	24	Y	2	30.48	27.94	25.40	15.23	14.23	10.67
87920-2459	87920-2493	87920-2497	24	Y	3	30.48	27.94	25.40	15.23	14.23	10.67
87920-2460	87920-2494	87920-2498	24	Y	4	30.48	27.94	25.40	15.23	14.23	10.67
87920-2647	87920-2681	87920-2685	26	N	1	33.02	30.48	-	15.23	14.23	10.67
87920-2648	87920-2682	87920-2686	26	N	2	33.02	30.48	-	15.23	14.23	10.67
87920-2649	87920-2683	87920-2687	26	N	3	33.02	30.48	-	15.23	14.23	10.67
87920-2650	87920-2684	87920-2688	26	N	4	33.02	30.48	-	15.23	14.23	10.67
87920-2657	87920-2691	87920-2695	26	Y	1	33.02	30.48	27.94	15.23	14.23	10.67
87920-2658	87920-2692	87920-2696	26	Y	2	33.02	30.48	27.94	15.23	14.23	10.67
87920-2659	87920-2693	87920-2697	26	Y	3	33.02	30.48	27.94	15.23	14.23	10.67
87920-2660	87920-2694	87920-2698	26	Y	4	33.02	30.48	27.94	15.23	14.23	10.67

THIS DRAWING CONTAINS INFORMATION THAT IS PROPRIETARY TO MOLEX ELECTRONIC TECHNOLOGIES, LLC AND SHOULD NOT BE USED WITHOUT WRITTEN PERMISSION

DIMENSION UNITS	SCALE
mm	NTS

GENERAL TOLERANCES (UNLESS SPECIFIED)

ANGULAR TOL	± 3.0 °
4 PLACES	±
3 PLACES	±
2 PLACES	± 0.2
1 PLACE	±
0 PLACES	±

DRAFT WHERE APPLICABLE MUST REMAIN WITHIN DIMENSIONS

CURRENT REV DESC:

EC NO: 698212
DRWN: DANUSA 2022/01/21
CHK'D: DANUSA 2022/03/04
APPR: MRAMAKRISHNA 2022/03/04

INITIAL REVISION:
DRWN: SKLIM01 2007/02/09
APPR: KWLEE 2007/02/14

THIRD ANGLE PROJECTION | DRAWING: A3-SIZE | SERIES: 87920

molex

CUSTOM HEADER
2.54MM PITCH DUAL ROW HEADER, SINGLE WAFER SMT

PRODUCT CUSTOMER DRAWING

DOCUMENT NUMBER	DOC TYPE	DOC PART	REVISION
SD-87920-050	PSD	001	A5

MATERIAL NUMBER	CUSTOMER	SHEET NUMBER
SEE TABLE	GENERAL MARKET	6 OF 10

DOCUMENT STATUS	P1	RELEASE DATE	2022/03/04 09:01:09

FORMAT: mass-Stock-A3
REVISION: H
DATE: 2018/01/16

PART NUMBER IN PACKAGING OPTION			CKT SIZE	PEG	PLATE OPT.	DIMENSION					
WITH CAP IN TAPE & REEL	W/O CAP IN TUBE	WITH CAP IN TUBE				A	B	C	G	F	M
87920-2827	87920-2861	87920-2865	28	N	1	35.56	33.02	-	12.69	11.69	8.13
87920-2828	87920-2862	87920-2866	28	N	2	35.56	33.02	-	12.69	11.69	8.13
87920-2829	87920-2863	87920-2867	28	N	3	35.56	33.02	-	12.69	11.69	8.13
87920-2830	87920-2864	87920-2868	28	N	4	35.56	33.02	-	12.69	11.69	8.13
87920-2837	87920-2871	87920-2875	28	Y	1	35.56	33.02	30.48	12.69	11.69	8.13
87920-2838	87920-2872	87920-2876	28	Y	2	35.56	33.02	30.48	12.69	11.69	8.13
87920-2839	87920-2873	87920-2877	28	Y	3	35.56	33.02	30.48	12.69	11.69	8.13
87920-2840	87920-2874	87920-2878	28	Y	4	35.56	33.02	30.48	12.69	11.69	8.13
87920-3027	87920-3061	87920-3065	30	N	1	38.10	35.56	-	12.69	11.69	8.13
87920-3028	87920-3062	87920-3066	30	N	2	38.10	35.56	-	12.69	11.69	8.13
87920-3029	87920-3063	87920-3067	30	N	3	38.10	35.56	-	12.69	11.69	8.13
87920-3030	87920-3064	87920-3068	30	N	4	38.10	35.56	-	12.69	11.69	8.13
87920-3037	87920-3071	87920-3075	30	Y	1	38.10	35.56	33.02	12.69	11.69	8.13
87920-3038	87920-3072	87920-3076	30	Y	2	38.10	35.56	33.02	12.69	11.69	8.13
87920-3039	87920-3073	87920-3077	30	Y	3	38.10	35.56	33.02	12.69	11.69	8.13
87920-3040	87920-3074	87920-3078	30	Y	4	38.10	35.56	33.02	12.69	11.69	8.13
87920-3227	87920-3261	87920-3265	32	N	1	40.64	38.10	-	12.69	11.69	8.13
87920-3228	87920-3262	87920-3266	32	N	2	40.64	38.10	-	12.69	11.69	8.13
87920-3229	87920-3263	87920-3267	32	N	3	40.64	38.10	-	12.69	11.69	8.13
87920-3230	87920-3264	87920-3268	32	N	4	40.64	38.10	-	12.69	11.69	8.13
87920-3237	87920-3271	87920-3275	32	Y	1	40.64	38.10	35.56	12.69	11.69	8.13
87920-3238	87920-3272	87920-3276	32	Y	2	40.64	38.10	35.56	12.69	11.69	8.13
87920-3239	87920-3273	87920-3277	32	Y	3	40.64	38.10	35.56	12.69	11.69	8.13
87920-3240	87920-3274	87920-3278	32	Y	4	40.64	38.10	35.56	12.69	11.69	8.13

PART NUMBER IN PACKAGING OPTION			CKT SIZE	PEG	PLATE OPT.	DIMENSION					
W/O CAP IN TRAY	W/O CAP IN TUBE	WITH CAP IN TUBE				A	B	C	G	F	M
87920-2847	87920-2881	87920-2885	28	N	1	35.56	33.02	-	15.23	14.23	10.67
87920-2848	87920-2882	87920-2886	28	N	2	35.56	33.02	-	15.23	14.23	10.67
87920-2849	87920-2883	87920-2887	28	N	3	35.56	33.02	-	15.23	14.23	10.67
87920-2850	87920-2884	87920-2888	28	N	4	35.56	33.02	-	15.23	14.23	10.67
87920-2857	87920-2891	87920-2895	28	Y	1	35.56	33.02	30.48	15.23	14.23	10.67
87920-2858	87920-2892	87920-2896	28	Y	2	35.56	33.02	30.48	15.23	14.23	10.67
87920-2859	87920-2893	87920-2897	28	Y	3	35.56	33.02	30.48	15.23	14.23	10.67
87920-2860	87920-2894	87920-2898	28	Y	4	35.56	33.02	30.48	15.23	14.23	10.67
87920-3047	87920-3081	87920-3085	30	N	1	38.10	35.56	-	15.23	14.23	10.67
87920-3048	87920-3082	87920-3086	30	N	2	38.10	35.56	-	15.23	14.23	10.67
87920-3049	87920-3083	87920-3087	30	N	3	38.10	35.56	-	15.23	14.23	10.67
87920-3050	87920-3084	87920-3088	30	N	4	38.10	35.56	-	15.23	14.23	10.67
87920-3057	87920-3091	87920-3095	30	Y	1	38.10	35.56	33.02	15.23	14.23	10.67
87920-3058	87920-3092	87920-3096	30	Y	2	38.10	35.56	33.02	15.23	14.23	10.67
87920-3059	87920-3093	87920-3097	30	Y	3	38.10	35.56	33.02	15.23	14.23	10.67
87920-3060	87920-3094	87920-3098	30	Y	4	38.10	35.56	33.02	15.23	14.23	10.67
87920-3247	87920-3281	87920-3285	32	N	1	40.64	38.10	-	15.23	14.23	10.67
87920-3248	87920-3282	87920-3286	32	N	2	40.64	38.10	-	15.23	14.23	10.67
87920-3249	87920-3283	87920-3287	32	N	3	40.64	38.10	-	15.23	14.23	10.67
87920-3250	87920-3284	87920-3288	32	N	4	40.64	38.10	-	15.23	14.23	10.67
87920-3257	87920-3291	87920-3295	32	Y	1	40.64	38.10	35.56	15.23	14.23	10.67
87920-3258	87920-3292	87920-3296	32	Y	2	40.64	38.10	35.56	15.23	14.23	10.67
87920-3259	87920-3293	87920-3297	32	Y	3	40.64	38.10	35.56	15.23	14.23	10.67
87920-3260	87920-3294	87920-3298	32	Y	4	40.64	38.10	35.56	15.23	14.23	10.67

THIS DRAWING CONTAINS INFORMATION THAT IS PROPRIETARY TO MOLEX ELECTRONIC TECHNOLOGIES, LLC AND SHOULD NOT BE USED WITHOUT WRITTEN PERMISSION

DIMENSION UNITS	SCALE
mm	NTS

GENERAL TOLERANCES (UNLESS SPECIFIED)

ANGULAR TOL	± 3.0 °
4 PLACES	±
3 PLACES	±
2 PLACES	± 0.2
1 PLACE	±
0 PLACES	±

DRAFT WHERE APPLICABLE MUST REMAIN WITHIN DIMENSIONS

CURRENT REV DESC:

EC NO: 698212
DRWN: DANUSA 2022/01/21
CHK'D: DANUSA 2022/03/04
APPR: MRAMAKRISHNA 2022/03/04

INITIAL REVISION:
DRWN: SKLIM01 2007/02/09
APPR: KWLEE 2007/02/14

THIRD ANGLE PROJECTION | DRAWING: A3-SIZE | SERIES: 87920

molex

CUSTOM HEADER
2.54MM PITCH DUAL ROW HEADER, SINGLE WAFER SMT

PRODUCT CUSTOMER DRAWING

DOCUMENT NUMBER	DOC TYPE	DOC PART	REVISION
SD-87920-050	PSD	001	A5

MATERIAL NUMBER	CUSTOMER	SHEET NUMBER
SEE TABLE	GENERAL MARKET	7 OF 10

DOCUMENT STATUS	P1	RELEASE DATE	2022/03/04 09:01:09

FORMAT: mass-Sd-Stock-A3
REVISION: H
DATE: 2018/01/16

PART NUMBER IN PACKAGING OPTION			CKT SIZE	PEG	PLATE OPT.	DIMENSION					
WITH CAP IN TAPE & REEL	W/O CAP IN TUBE	WITH CAP IN TUBE				A	B	C	G	F	M
87920-3427	87920-3461	87920-3465	34	N	1	43.18	40.64	-	12.69	11.69	8.13
87920-3428	87920-3462	87920-3466	34	N	2	43.18	40.64	-	12.69	11.69	8.13
87920-3429	87920-3463	87920-3467	34	N	3	43.18	40.64	-	12.69	11.69	8.13
87920-3430	87920-3464	87920-3468	34	N	4	43.18	40.64	-	12.69	11.69	8.13
87920-3437	87920-3471	87920-3475	34	Y	1	43.18	40.64	38.10	12.69	11.69	8.13
87920-3438	87920-3472	87920-3476	34	Y	2	43.18	40.64	38.10	12.69	11.69	8.13
87920-3439	87920-3473	87920-3477	34	Y	3	43.18	40.64	38.10	12.69	11.69	8.13
87920-3440	87920-3474	87920-3478	34	Y	4	43.18	40.64	38.10	12.69	11.69	8.13

PART NUMBER IN PACKAGING OPTION			CKT SIZE	PEG	PLATE OPT.	DIMENSION					
W/O CAP IN TRAY	W/O CAP IN TUBE	WITH CAP IN TUBE				A	B	C	G	F	M
87920-3447	87920-3481	87920-3485	34	N	1	43.18	40.64	-	15.23	14.23	10.67
87920-3448	87920-3482	87920-3486	34	N	2	43.18	40.64	-	15.23	14.23	10.67
87920-3449	87920-3483	87920-3487	34	N	3	43.18	40.64	-	15.23	14.23	10.67
87920-3450	87920-3484	87920-3488	34	N	4	43.18	40.64	-	15.23	14.23	10.67
87920-3457	87920-3491	87920-3495	34	Y	1	43.18	40.64	38.10	15.23	14.23	10.67
87920-3458	87920-3492	87920-3496	34	Y	2	43.18	40.64	38.10	15.23	14.23	10.67
87920-3459	87920-3493	87920-3497	34	Y	3	43.18	40.64	38.10	15.23	14.23	10.67
87920-3460	87920-3494	87920-3498	34	Y	4	43.18	40.64	38.10	15.23	14.23	10.67

PART NUMBER IN PACKAGING OPTION			CKT SIZE	PEG	PLATE OPT.	DIMENSION					
W/O CAP IN TRAY	W/O CAP IN TUBE	WITH CAP IN TUBE				A	B	C	G	F	M
87920-3627	87920-3661	87920-3665	36	N	1	45.72	43.18	-	12.69	11.69	8.13
87920-3628	87920-3662	87920-3666	36	N	2	45.72	43.18	-	12.69	11.69	8.13
87920-3629	87920-3663	87920-3667	36	N	3	45.72	43.18	-	12.69	11.69	8.13
87920-3630	87920-3664	87920-3668	36	N	4	45.72	43.18	-	12.69	11.69	8.13
87920-3637	87920-3671	87920-3675	36	Y	1	45.72	43.18	40.64	12.69	11.69	8.13
87920-3638	87920-3672	87920-3676	36	Y	2	45.72	43.18	40.64	12.69	11.69	8.13
87920-3639	87920-3673	87920-3677	36	Y	3	45.72	43.18	40.64	12.69	11.69	8.13
87920-3640	87920-3674	87920-3678	36	Y	4	45.72	43.18	40.64	12.69	11.69	8.13

PART NUMBER IN PACKAGING OPTION			CKT SIZE	PEG	PLATE OPT.	DIMENSION					
W/O CAP IN TRAY	W/O CAP IN TUBE	WITH CAP IN TUBE				A	B	C	G	F	M
87920-3647	87920-3681	87920-3685	36	N	1	45.72	43.18	-	15.23	14.23	10.67
87920-3648	87920-3682	87920-3686	36	N	2	45.72	43.18	-	15.23	14.23	10.67
87920-3649	87920-3683	87920-3687	36	N	3	45.72	43.18	-	15.23	14.23	10.67
87920-3650	87920-3684	87920-3688	36	N	4	45.72	43.18	-	15.23	14.23	10.67
87920-3657	87920-3691	87920-3695	36	Y	1	45.72	43.18	40.64	15.23	14.23	10.67
87920-3658	87920-3692	87920-3696	36	Y	2	45.72	43.18	40.64	15.23	14.23	10.67
87920-3659	87920-3693	87920-3697	36	Y	3	45.72	43.18	40.64	15.23	14.23	10.67
87920-3660	87920-3694	87920-3698	36	Y	4	45.72	43.18	40.64	15.23	14.23	10.67

THIS DRAWING CONTAINS INFORMATION THAT IS PROPRIETARY TO MOLEX ELECTRONIC TECHNOLOGIES, LLC AND SHOULD NOT BE USED WITHOUT WRITTEN PERMISSION

DIMENSION UNITS	SCALE
mm	NTS

GENERAL TOLERANCES (UNLESS SPECIFIED)

ANGULAR TOL	± 3.0 °
4 PLACES	±
3 PLACES	±
2 PLACES	± 0.2
1 PLACE	±
0 PLACES	±

DRAFT WHERE APPLICABLE MUST REMAIN WITHIN DIMENSIONS

CURRENT REV DESC:

EC NO: 698212
DRWN: DANUSA 2022/01/21
CHK'D: DANUSA 2022/03/04
APPR: MRAMAKRISHNA 2022/03/04

INITIAL REVISION:
DRWN: SKLIM01 2007/02/09
APPR: KWLEE 2007/02/14

THIRD ANGLE PROJECTION | DRAWING: A3-SIZE | SERIES: 87920

molex

CUSTOM HEADER
2.54MM PITCH DUAL ROW HEADER, SINGLE WAFER SMT

PRODUCT CUSTOMER DRAWING

DOCUMENT NUMBER	DOC TYPE	DOC PART	REVISION
SD-87920-050	PSD	001	A5

MATERIAL NUMBER	CUSTOMER	SHEET NUMBER
SEE TABLE	GENERAL MARKET	8 OF 10

DOCUMENT STATUS	P1	RELEASE DATE	2022/03/04 09:01:09

FORMAT: master-molex-A3
REVISION: H
DATE: 2018/01/16

PART NUMBER IN PACKAGING OPTION			CKT SIZE	PEG	PLATE OPT.	DIMENSION					
W/O CAP IN TRAY	W/O CAP IN TUBE	WITH CAP IN TUBE				A	B	C	G	F	M
87920-3827	87920-3861	87920-3865	38	N	1	48.26	45.72	-	12.69	11.69	8.13
87920-3828	87920-3862	87920-3866	38	N	2	48.26	45.72	-	12.69	11.69	8.13
87920-3829	87920-3863	87920-3867	38	N	3	48.26	45.72	-	12.69	11.69	8.13
87920-3830	87920-3864	87920-3868	38	N	4	48.26	45.72	-	12.69	11.69	8.13
87920-3837	87920-3871	87920-3875	38	Y	1	48.26	45.72	43.18	12.69	11.69	8.13
87920-3838	87920-3872	87920-3876	38	Y	2	48.26	45.72	43.18	12.69	11.69	8.13
87920-3839	87920-3873	87920-3877	38	Y	3	48.26	45.72	43.18	12.69	11.69	8.13
87920-3840	87920-3874	87920-3878	38	Y	4	48.26	45.72	43.18	12.69	11.69	8.13
87920-4027	87920-4061	87920-4065	40	N	1	50.80	48.26	-	12.69	11.69	8.13
87920-4028	87920-4062	87920-4066	40	N	2	50.80	48.26	-	12.69	11.69	8.13
87920-4029	87920-4063	87920-4067	40	N	3	50.80	48.26	-	12.69	11.69	8.13
87920-4030	87920-4064	87920-4068	40	N	4	50.80	48.26	-	12.69	11.69	8.13
87920-4037	87920-4071	87920-4075	40	Y	1	50.80	48.26	45.72	12.69	11.69	8.13
87920-4038	87920-4072	87920-4076	40	Y	2	50.80	48.26	45.72	12.69	11.69	8.13
87920-4039	87920-4073	87920-4077	40	Y	3	50.80	48.26	45.72	12.69	11.69	8.13
87920-4040	87920-4074	87920-4078	40	Y	4	50.80	48.26	45.72	12.69	11.69	8.13

PART NUMBER IN PACKAGING OPTION			CKT SIZE	PEG	PLATE OPT.	DIMENSION					
W/O CAP IN TRAY	W/O CAP IN TUBE	WITH CAP IN TUBE				A	B	C	G	F	M
87920-3847	87920-3881	87920-3885	38	N	1	48.26	45.72	-	15.23	14.23	10.67
87920-3848	87920-3882	87920-3886	38	N	2	48.26	45.72	-	15.23	14.23	10.67
87920-3849	87920-3883	87920-3887	38	N	3	48.26	45.72	-	15.23	14.23	10.67
87920-3850	87920-3884	87920-3888	38	N	4	48.26	45.72	-	15.23	14.23	10.67
87920-3857	87920-3891	87920-3895	38	Y	1	48.26	45.72	43.18	15.23	14.23	10.67
87920-3858	87920-3892	87920-3896	38	Y	2	48.26	45.72	43.18	15.23	14.23	10.67
87920-3859	87920-3893	87920-3897	38	Y	3	48.26	45.72	43.18	15.23	14.23	10.67
87920-3860	87920-3894	87920-3898	38	Y	4	48.26	45.72	43.18	15.23	14.23	10.67
87920-4047	87920-4081	87920-4085	40	N	1	50.80	48.26	-	15.23	14.23	10.67
87920-4048	87920-4082	87920-4086	40	N	2	50.80	48.26	-	15.23	14.23	10.67
87920-4049	87920-4083	87920-4087	40	N	3	50.80	48.26	-	15.23	14.23	10.67
87920-4050	87920-4084	87920-4088	40	N	4	50.80	48.26	-	15.23	14.23	10.67
87920-4057	87920-4091	87920-4095	40	Y	1	50.80	48.26	45.72	15.23	14.23	10.67
87920-4058	87920-4092	87920-4096	40	Y	2	50.80	48.26	45.72	15.23	14.23	10.67
87920-4059	87920-4093	87920-4097	40	Y	3	50.80	48.26	45.72	15.23	14.23	10.67
87920-4060	87920-4094	87920-4098	40	Y	4	50.80	48.26	45.72	15.23	14.23	10.67

THIS DRAWING CONTAINS INFORMATION THAT IS PROPRIETARY TO MOLEX ELECTRONIC TECHNOLOGIES, LLC AND SHOULD NOT BE USED WITHOUT WRITTEN PERMISSION

DIMENSION UNITS	SCALE
mm	NTS

GENERAL TOLERANCES (UNLESS SPECIFIED)

ANGULAR TOL	±	3.0 °
4 PLACES	±	
3 PLACES	±	
2 PLACES	±	0.2
1 PLACE	±	
0 PLACES	±	

DRAFT WHERE APPLICABLE MUST REMAIN WITHIN DIMENSIONS

CURRENT REV DESC:

EC NO: 698212
DRWN: DANUSA 2022/01/21
CHK'D: DANUSA 2022/03/04
APPR: MRAMAKRISHNA 2022/03/04

INITIAL REVISION:
DRWN: SKLIM01 2007/02/09
APPR: KWLEE 2007/02/14

THIRD ANGLE PROJECTION | DRAWING: A3-SIZE | SERIES: 87920

molex

CUSTOM HEADER
2.54MM PITCH DUAL ROW HEADER, SINGLE WAFER SMT

PRODUCT CUSTOMER DRAWING

DOCUMENT NUMBER	DOC TYPE	DOC PART	REVISION
SD-87920-050	PSD	001	A5

MATERIAL NUMBER	CUSTOMER	SHEET NUMBER
SEE TABLE	GENERAL MARKET	9 OF 10

DOCUMENT STATUS	P1	RELEASE DATE	2022/03/04 09:01:09

FORMAT: master-Stock-A3
REVISION: H
DATE: 2018/01/16

SPECIAL OPTION

PART NUMBER IN PACKAGING OPTION		CKT SIZE	PEG	PLATE OPT.	DIMENSION						
										CKT LOCATION	
WITH CAP IN TAPE & REEL	WITH CAP IN TUBE				A	B	C	G	F	M = 10.67	M = 0
87920-1201	87920-1202	12	Y	4	15.24	12.70	10.16	15.23	14.23	3, 4, 5, 6, 7, 8, 9, 10	1, 2, 11, 12

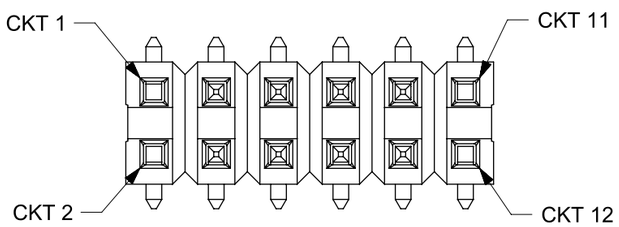

12 CKT WITH SPECIAL OPTION

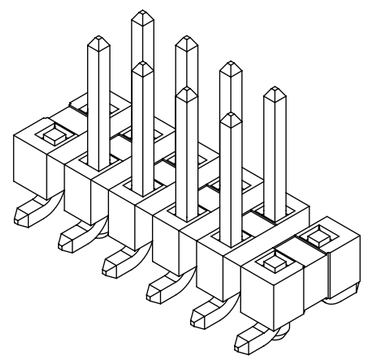

(PART WITHOUT CAP FOR ILLUSTRATION ONLY)

THIS DRAWING CONTAINS INFORMATION THAT IS PROPRIETARY TO MOLEX ELECTRONIC TECHNOLOGIES, LLC AND SHOULD NOT BE USED WITHOUT WRITTEN PERMISSION

DIMENSION UNITS	SCALE
mm	NTS

GENERAL TOLERANCES (UNLESS SPECIFIED)		
ANGULAR TOL	±	3.0 °
4 PLACES	±	
3 PLACES	±	
2 PLACES	±	0.2
1 PLACE	±	
0 PLACES	±	

DRAFT WHERE APPLICABLE MUST REMAIN WITHIN DIMENSIONS

CURRENT REV DESC:

EC NO: 698212
DRWN: DANUSA 2022/01/21
CHK'D: DANUSA 2022/03/04
APPR: MRAMAKRISHNA 2022/03/04

INITIAL REVISION:
DRWN: SKLIM01 2007/02/09
APPR: KWLEE 2007/02/14

THIRD ANGLE PROJECTION | DRAWING: A3-SIZE | SERIES: 87920

molex

CUSTOM HEADER
2.54MM PITCH DUAL ROW HEADER, SINGLE WAFER SMT

PRODUCT CUSTOMER DRAWING

DOCUMENT NUMBER	DOC TYPE	DOC PART	REVISION
SD-87920-050	PSD	001	A5

MATERIAL NUMBER	CUSTOMER	SHEET NUMBER
SEE TABLE	GENERAL MARKET	10 OF 10

DOCUMENT STATUS	P1	RELEASE DATE	2022/03/04 09:01:09

FORMAT: master-db-prod-A3
REVISION: H
DATE: 2018/01/18