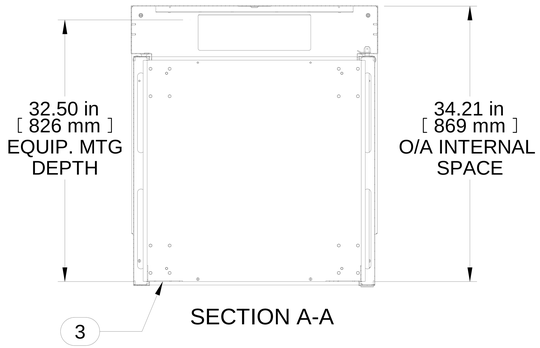

SECTION A-A

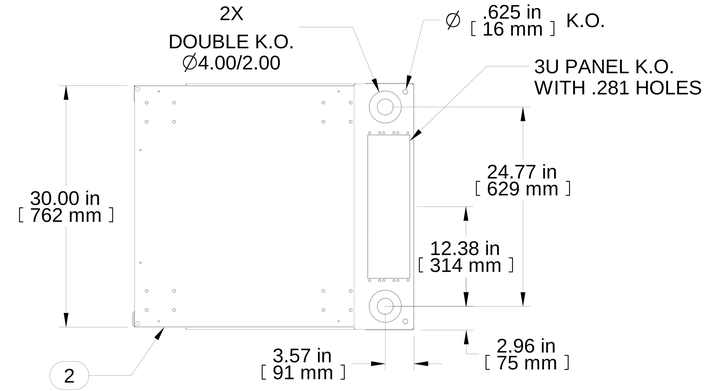

TOP VIEW

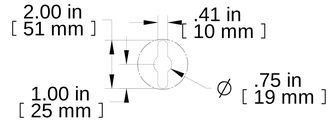

DETAIL B
3:1

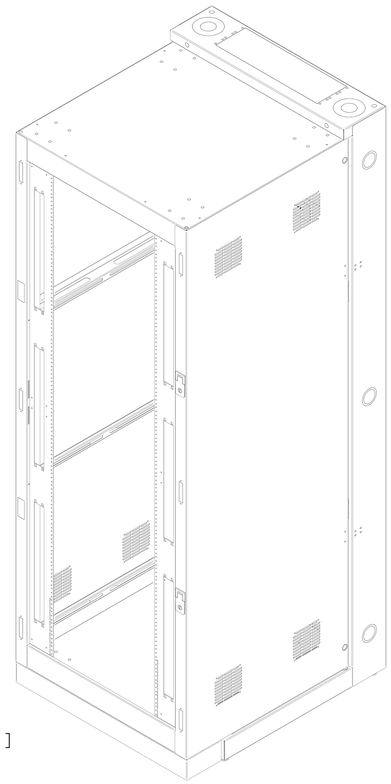

ISOMETRIC

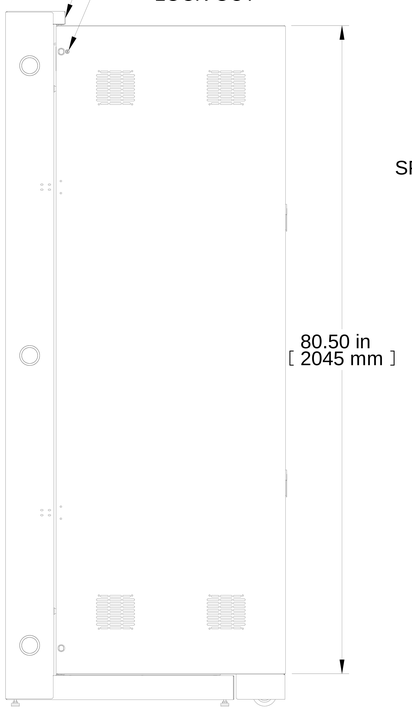

L.S. VIEW

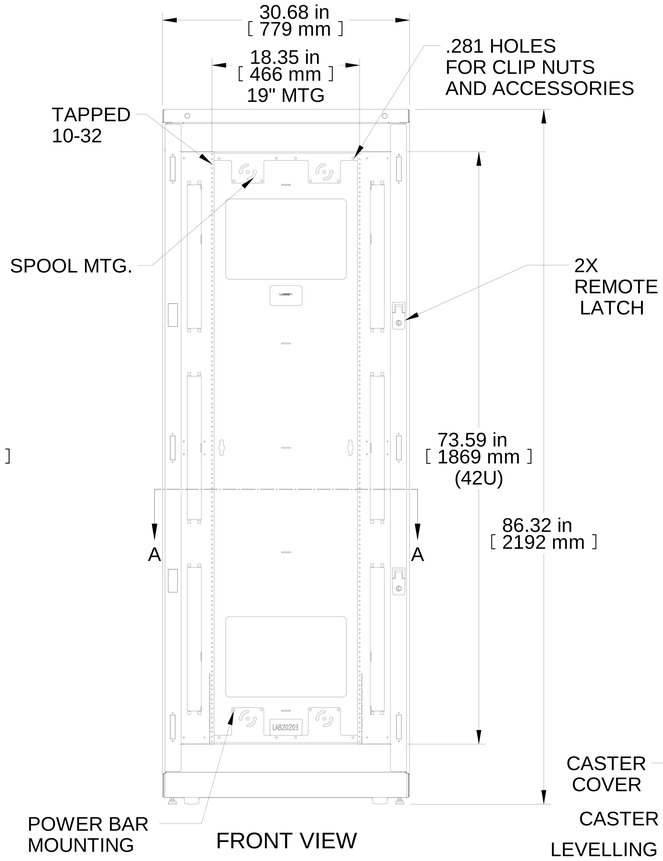

FRONT VIEW

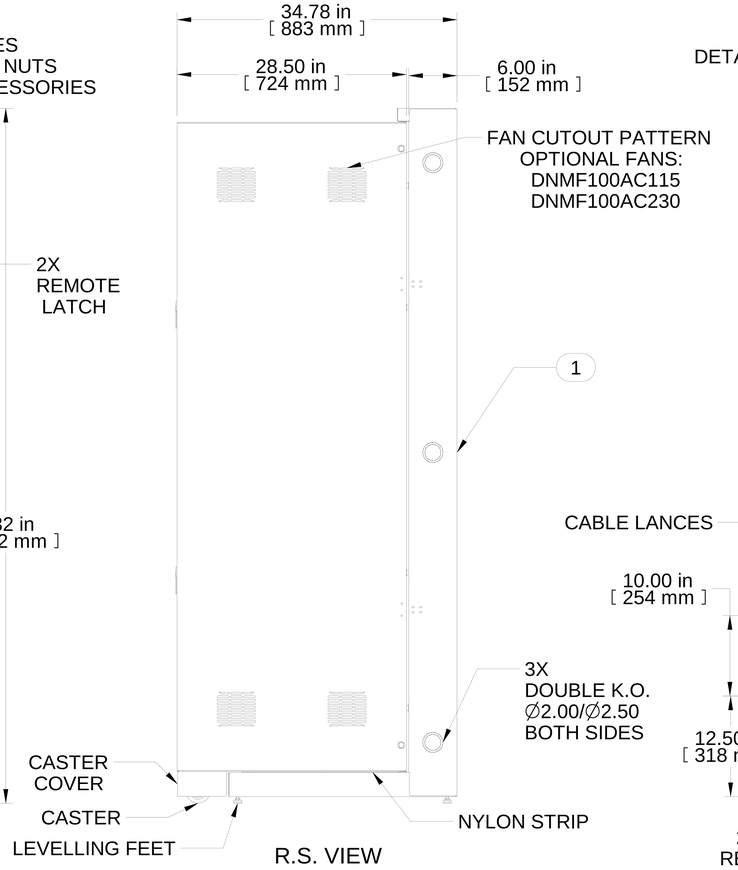

R.S. VIEW

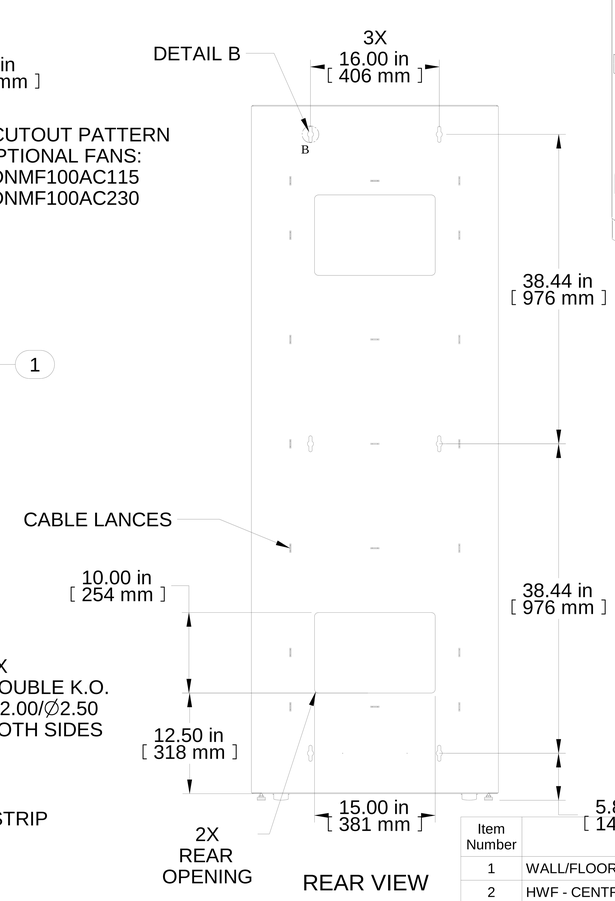

REAR VIEW

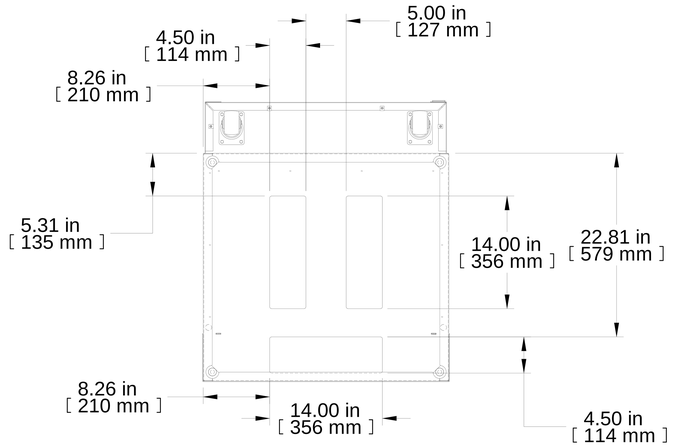

BOTTOM VIEW

Item Number	Title	Quantity
1	WALL/FLOOR REAR MOUNT ASSY	1
2	HWF - CENTRE SECTION WELD ASS'Y	1
3	H1 PANEL RAIL 42U LH	1
15*	WARNING LABEL (PART) 86871	1

PART NUMBERS

HWF3042U36WH	PAINTED WHITE TEXTURED

NOTES

Door Not Included

1 SET OF MOUNTING RAILS

See Hammond Website for Additional Accessories

Français

Pour tous les détails sur nos produits,
svp veuillez consulter notre site www.hammondmfg.com
Data subject to change without notice. Isometric drawing not to scale.
Les données sont sujettes à changement sans préavis.

HAMMOND MANUFACTURING®

www.hammondmfg.com

PART NO. HWF3042U36WH