THIS DRAWING IS UNPUBLISHED. RELEASED FOR PUBLICATION
© COPYRIGHT 2018 BY - TE CONNECTIVITY ALL RIGHTS RESERVED.

REVISIONS					
F	LTR	DESCRIPTION	DATE	DWN	APVD
	A44	REVISED PER ECO-19-006701	08MAY2019	JMS	GK
	A45	REVISED PER ECO-19-016392	08NOV2019	CN	HC
	A46	REVISED PER ECO-20-012737	14SEP2020	AP	GK
	A47	REVISED PER ECO-20-016542	23NOV2020	CN	HC

LIST OF PARTS									
QTY. REQUIRED			ITEM	DESCRIPTION	COLOR	SUPPLIER PART NUMBER	MATERIAL SPECIFICATION	RECYCLING CODE	WEIGHT (GRAM)
INDEX C	INDEX B	INDEX A							
-	-	1	1	HOUSING, KEYING OPTION "A"	BLACK	0-1587054-1	30% GF PBT	>PBT-GF30<	TBD
-	1	-		HOUSING, KEYING OPTION "B"	GRAY	0-1587054-2	30% GF PBT	>PBT-GF30<	TBD
1	-	-		HOUSING, KEYING OPTION "C"	NATURAL	0-1587054-3	30% GF PBT	>PBT-GF30<	TBD
1	1	1	2	TPA	RED	0-1587055-1	15% GF PBT	>PBT-GF15<	TBD
1	1	1	3	ALIGNMENT PLATE	NATURAL	0-1587056-1	15% GF PBT	>PBT-GF15<	TBD
1	1	1	4	END SEAL COVER	BLACK	0-1587057-1	15% GF PBT	>PBT-GF15<	TBD
1	1	1	5	END SEAL COVER	BLACK	0-1587057-3	15% GF PBT	>PBT-GF15<	TBD 8
1	1	1	6	END SEAL GROMMET	LT GREEN	0-1587058-1	SILICON	>VMQ<	TBD

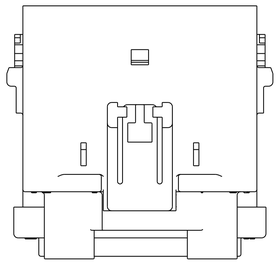

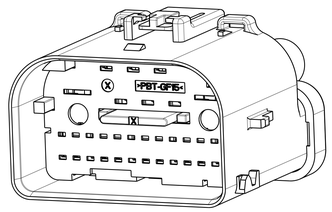

1. PART MUST CONFORM TO THE USCAR-2 SPECIFICATION, DATED 07/DEC/00 (REVISION 3).
2. 0.2mm MAXIMUM RADIUS PERMISSIBLE ON EDGES AND FILLETS SHOWN AS SHARP FOR PLASTIC PARTS.
3. PRODUCTION DATE CODE AND PINOUT CODE MUST BE LEGIBLE AND PERMANENTLY APPLIED WHEREVER PACKAGE SIZE PERMITS OR OTHER AGREEMENTS ARE MADE.
4. MATES WITH ASSEMBLY SHOWN ON DRAWING 1438841.
5. SEE TE INSTRUCTION SHEET 408-8911 FOR PROPER POSITIONING OF TPA AND TE INSTRUCTION SHEET 408-8832 FOR APPLICATION USE OF CONNECTOR SYSTEM.
6. TERMINAL CAVITIES 9-34 ARE RESTRICTED TO WIRE OD RANGE OF 1.20-2.34mm.
7. OBSOLETE PART
8. END SEAL COVER "ALL OPEN" IS PERMISSIBLE ONLY IN THE FOLLOWING TE P/N: 1438842-1, 1438842-2 AND 1438842-3.

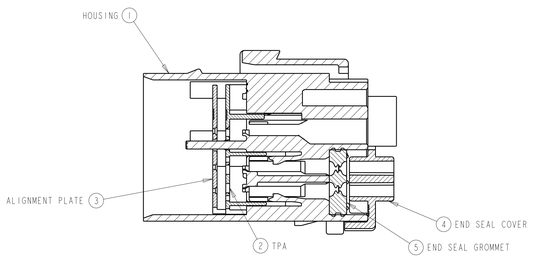

SECTION A-A
TPA AND ALIGNMENT PLATE
IN PRE-SEATED POSITION 5

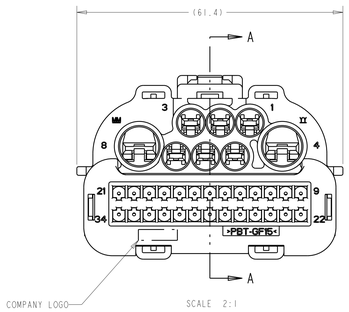

SCALE 2:1

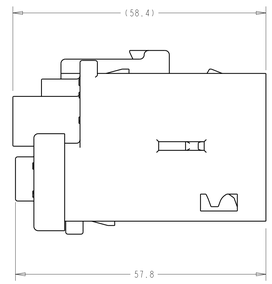

APPLICABLE COMPONENTS (FOR REFERENCE ONLY)				APPLICABLE WIRE SIZES (FOR REFERENCE ONLY)	COMPONENT MATING PART NUMBER
DESCRIPTION	COLOR/ PLATING	SUPPLIER	SUPPLIER PART NUMBER		
6 TERMINAL - MALE 1.5mm	TIN	MOLEX	33000-0002	16 AWG 18-20 AWG OR METRIC EQUIVALENT	33012-2001 33012-2002
6 TERMINAL - MALE 1.5mm	TIN	MOLEX	33000-0003	22 AWG OR METRIC EQUIVALENT	33012-2003
TERMINAL - MALE 2.8mm	TIN	TE	1326031-2	20 AWG OR METRIC EQUIVALENT	1326032-2
TERMINAL - MALE 2.8mm	TIN	TE	1326031-3	18 AWG OR METRIC EQUIVALENT	1326032-3
TERMINAL - MALE 2.8mm	TIN	TE	1326031-4	16 AWG OR METRIC EQUIVALENT	1326032-4
TERMINAL - MALE 2.8mm	TIN	TE	1326031-5	14 AWG OR METRIC EQUIVALENT	1326032-5
TERMINAL - MALE 2.8mm	TIN	TE	1-1326031-1	12 AWG OR METRIC EQUIVALENT	1326032-6
CABLE SEAL - 2.8mm	GREEN	YAZAKI	7158-3111-60	1.2-1.9mm WIRE O.D.	N/A
CABLE SEAL - 2.8mm	YELLOW	YAZAKI	7158-3112-70	1.8-2.3mm WIRE O.D.	N/A
CABLE SEAL - 2.8mm	WHITE	YAZAKI	7158-3113-40	2.1-3.0mm WIRE O.D.	N/A
CABLE SEAL - 2.8mm	LT GRAY	YAZAKI	7158-3110-40	3.1-3.3mm WIRE O.D.	N/A
TERMINAL - MALE 6.3mm	TIN	YAZAKI	7114-4140-02	20-16 AWG OR METRIC EQUIVALENT	7116-4140-02
TERMINAL - MALE 6.3mm	TIN	YAZAKI	7114-4141-02	14 AWG OR METRIC EQUIVALENT	7116-4141-02
TERMINAL - MALE 6.3mm	TIN	YAZAKI	7114-4142-02	12 AWG OR METRIC EQUIVALENT	7116-4142-02
TERMINAL - MALE 6.3mm	TIN	YAZAKI	7114-4143-02	10 AWG OR METRIC EQUIVALENT	7116-4143-02
CABLE SEAL - 6.3mm	RED	YAZAKI	7158-3081-50	1.4-2.3mm WIRE O.D.	N/A
CABLE SEAL - 6.3mm	BLUE	YAZAKI	7158-3082-90	2.1-3.0mm WIRE O.D.	N/A
CABLE SEAL - 6.3mm	BLACK	YAZAKI	7158-3083	3.0-3.8mm WIRE O.D.	N/A
CABLE SEAL - 6.3mm	LT GRAY	YAZAKI	7158-3084-40	3.8-4.05mm WIRE O.D.	N/A
CAVITY PLUG - 2.8mm	BLUE	YAZAKI	7158-3114-90	N/A	N/A
CAVITY PLUG - 6.3mm	GREEN	YAZAKI	7158-3080-60	N/A	N/A

NOTE: SEE SUPPLIER DRAWINGS FOR LATEST INFORMATION AND CRIMP SPECIFICATIONS.

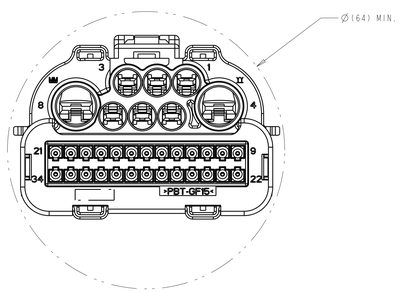

MIN. FEED THRU CONDITION
WITH 1mm CLEARANCE ALL AROUND
SCALE 2:1

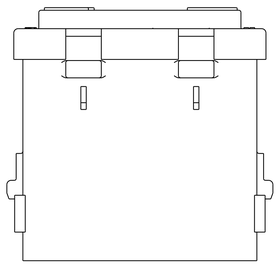

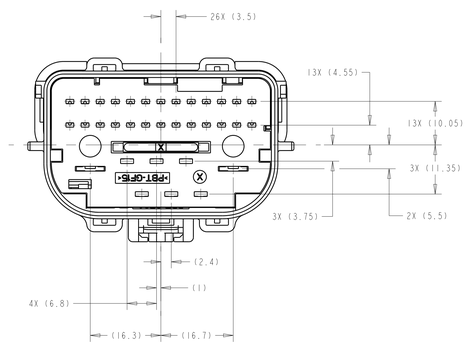

THIS DRAWING IS A CONTROLLED DOCUMENT.

DIMENSIONS: mm

TOLERANCES UNLESS OTHERWISE SPECIFIED:
D PLC ±0.3
1 PLC ±0.3
2 PLC ±0.1
3 PLC ±0.1
4 PLC ±0.1
ANGLES ±1°

MATERIAL -
FINISH -

DWN JL DRUMMOND 18OCT2004
CHK RL COBLE 19OCT2004
APVD RL COBLE 19OCT2004

PRODUCT SPEC -
APPLICATION SPEC -
WEIGHT -

TE Connectivity

NAME CAP ASSEMBLY, 34 WAY, SEALED, HYBRID, MALE

SIZE	CAGE CODE	DRAWING NO	RESTRICTED TO
A0	00779	C-1438842	-

CUSTOMER DRAWING | SCALE 2:1 | SHEET 1 OF 5 | REV A47

A806 (3/13)

THIS DRAWING IS UNPUBLISHED. RELEASED FOR PUBLICATION
© COPYRIGHT 2018 BY - TE CONNECTIVITY ALL RIGHTS RESERVED.

REVISIONS					
P	LTR	DESCRIPTION	DATE	DWN	APVD
	-	SEE SHEET 1	-	-	-

HARNESS KEYING OPTIONS

SCALE 2:1

INDEX A

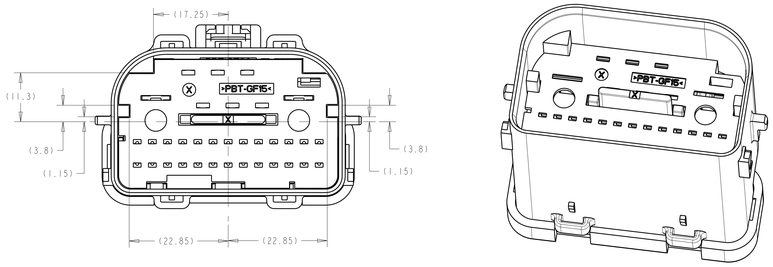

INDEX B

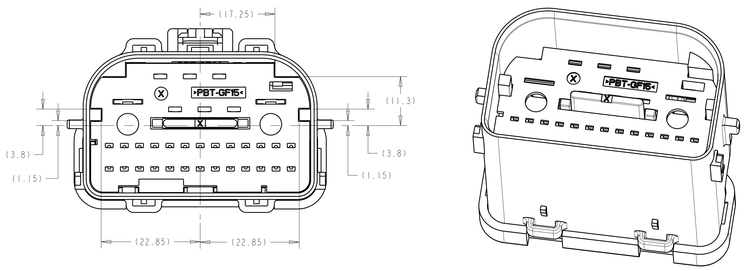

INDEX C

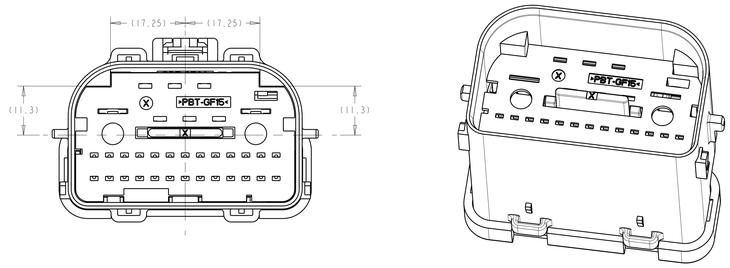

CIRCUITS 1 THRU 8 REMAIN OPEN

TE P/N	PINOUT ID CODE	INDEX (KEY)	COLOR	1	2	3	4	5	6	7	8	9	10	11	12	13	14	15	16	17	18	19	20	21	22	23	24	25	26	27	28	29	30	31	32	33	34
6-1438842-5	ACK	A	BLACK																	17						23						29				33	34
6-1438842-4	ACJ	A	BLACK																	17				21		23						29	30	31	32	33	34
6-1438842-3	ACI	A	BLACK																					21									30	31	32		
6-1438842-2	ACH	A	BLACK																						22												
6-1438842-1	ACG	A	BLACK									9	10	11	12		14						20	21	22	23		25		27	28		30	31		33	34
6-1438842-0	ACF	A	BLACK									9	10	11	12		14						20	21	22	23		25			28		30	31			
5-1438842-9	ACE	A	BLACK									9	10	11	12															27						33	
5-1438842-8	ACD	A	BLACK									9	10	11	12																						
5-1438842-7	ACC	A	BLACK											11		13					18			21		23						29				33	34
5-1438842-6	ACB	A	BLACK										10		12	13	14		16	17	18	19	20	21			24	25		27	28	29	30	31		33	
5-1438842-5	ACA	A	BLACK										10		12	13	14	15	16	17	18	19	20	21			24	25	26	27	28		30	31	32	33	34
5-1438842-4	ABZ	A	BLACK												12		14	15	16		18		20						26	27							
5-1438842-3	ABY	A	BLACK										10		12	13	14		16	17	18	19	20	21			24	25		27	28		30	31		33	
5-1438842-2	ABX	A	BLACK												12							19	20	21	22												
5-1438842-1	ABW	A	BLACK												12							19	20	21	22			25	26	27							
5-1438842-0	ABV	A	BLACK										10	11		13	14	15	16	17							24	25	26					31	32	33	34
4-1438842-9	ABU	A	BLACK											11											22	23			26	27	28	29	30	31	32	33	34
4-1438842-8	ABT	A	BLACK											11															26				30	31	32	33	34
4-1438842-7	ABS	A	BLACK									9	10	11		13	14	15	16	17	18	19	20		22	23	24	25	26	27	28		30	31	32	33	34
4-1438842-6	ABR	A	BLACK										10		12	13	14	15	16	17	18	19	20	21			24	25	26	27	28	29	30	31	32	33	34
4-1438842-5	ABQ	A	BLACK												12		14	15	16		18		20						26	27		29					
4-1438842-4	ABP	A	BLACK												12	13	14		16	17	18	19	20	21			24	25		27	28	29	30	31		33	
4-1438842-3	ABO	A	BLACK												12	13	14		16	17	18	19	20	21			24	25		27	28		30	31		33	
4-1438842-2	ABN	A	BLACK																									25									
4-1438842-1	ABM	A	BLACK																									25	26	27					32		
4-1438842-0	ABL	A	BLACK												12								20									29					
3-1438842-9	ABK	A	BLACK												12		14		16		18		20							27							
3-1438842-8	ABJ	A	BLACK												12		14		16		18		20							27		29					
3-1438842-7	ABI	A	BLACK																								24	25			28						
3-1438842-6	ABH	A	BLACK																								24	25	26	27	28				32		
3-1438842-5	ABG	A	BLACK																								24				28						
3-1438842-4	ABF	A	BLACK												12							19	20	21	22		24	25			28						
3-1438842-3	ABE	A	BLACK												12							19	20	21	22		24				28						
3-1438842-2	ABD	A	BLACK																			19	20	21	22				26	27			30	31			34
3-1438842-1	ABC	A	BLACK															15	16	17						23							30	31			
~~3-1438842-0~~ ⚠1	ABB	A	BLACK											11								19					24										
~~2-1438842-9~~ ⚠1	ABA	A	BLACK																			19			22		24		26	27	28				32		
2-1438842-8	AAZ	A	BLACK											11								19					24	25									
2-1438842-7	AAY	A	BLACK																			19			22		24	25	26	27	28				32		
2-1438842-6	AAX	A	BLACK											11	12							19	20	21			24										
~~2-1438842-5~~ ⚠1	AAW	A	BLACK											11	12							19	20	21			24	25									
2-1438842-4	AAV	A	BLACK												12							19	20	21	22		24	25	26	27	28						
~~2-1438842-3~~ ⚠1	AAU	A	BLACK												12								20	21	22				26	27	28						
2-1438842-2	AAT	A	BLACK											11	12								20	21													
~~2-1438842-1~~ ⚠1	AAS	A	BLACK											11	12							19	20	21													
~~2-1438842-0~~ ⚠1	AAR	A	BLACK												12							19	20	21	22		24		26	27	28						
~~1-1438842-9~~ ⚠1	AAQ	A	BLACK																				20			23	24	25		27	28	29	30	31		33	
~~1-1438842-8~~ ⚠1	AAP	A	BLACK																							23	24	25						31		33	
~~1-1438842-7~~ ⚠1	AAO	A	BLACK																					21	22	23	24	25						31		33	
~~1-1438842-6~~ ⚠1	AAN	A	BLACK																				20	21	22	23	24	25		27	28	29	30	31		33	
1-1438842-5	AAM	A	BLACK									9	10	11	12	13	14									23			26	27							
1-1438842-4	AAL	A	BLACK									9	10	11	12	13	14						20	21	22	23		25	26	27	28	29	30				
1-1438842-3	AAK	A	BLACK									9	10	11	12															27							
1-1438842-2	AAJ	A	BLACK									9	10	11	12								20	21	22			25		27	28	29	30				
1-1438842-1	AAI	A	BLACK									9	10	11	12	13	14									23			26	27							
1-1438842-0	AAH	A	BLACK									9	10	11	12	13	14						20	21	22	23			26	27	28	29	30				
1438842-9	AAG	A	BLACK									9	10	11	12															27							
1438842-8	AAF	A	BLACK									9	10	11	12								20	21	22			25		27	28	29	30				
1438842-7	AAE	A	BLACK													13	14						20	21	22	23	24	25	26	27	28	29		31	32	33	34
~~1438842-6~~ ⚠1	AAD	A	BLACK																									25	26	27	28	29					
1438842-5	AAC	A	BLACK																				20	21	22	23	24	25	26	27	28	29		31			34
1438842-4	AAB	A	BLACK														14											25	26	27	28	29			32	33	
1438842-3 ⚠8	CAA	C	NATURAL																																		
1438842-2 ⚠8	BAA	B	GRAY																																		
1438842-1 ⚠8	AAA	A	BLACK																																		

BLOCKED CAVITIES INDICATED BY A NUMERIC SYMBOL IN THAT CIRCUIT LOCATION

THIS DRAWING IS A CONTROLLED DOCUMENT.

DIMENSIONS: mm

TOLERANCES UNLESS OTHERWISE SPECIFIED:
0 PLC ±0.3
1 PLC ±0.3
2 PLC ±0.1
3 PLC ±0.1
4 PLC ±0.1
ANGLES ±1°

MATERIAL - FINISH -

DRN	DL DRUMMOND	30CT2004
CHK	RL COBLE	30CT2004
APVD	RL COBLE	30CT2004

PRODUCT SPEC -
APPLICATION SPEC -
WEIGHT -
CUSTOMER DRAWING

TE Connectivity

NAME: CAP ASSEMBLY, 34 WAY, SEALED, HYBRID, MALE

SIZE	CAGE CODE	DRAWING NO	RESTRICTED TO
A0	00779	C-1438842	-

SCALE	SHEET	REV
2:1	2 OF 5	A47

4806 (3/13)

THIS DRAWING IS UNPUBLISHED. RELEASED FOR PUBLICATION
© COPYRIGHT 2018 BY - TE CONNECTIVITY ALL RIGHTS RESERVED.

REVISIONS					
P	LTR	DESCRIPTION	DATE	DWN	APVD
	-	SEE SHEET 1	-	-	-

TE P/N	PINOUT ID CODE	INDEX (KEY)	COLOR	1	2	3	4	5	6	7	8	9	10	11	12	13	14	15	16	17	18	19	20	21	22	23	24	25	26	27	28	29	30	31	32	33	34
3-2203356-1	AEX	A	BLACK									9		11				15				19			22	23									32	33	
3-2203356-0	AEW	A	BLACK									9													22	23									32	33	
2-2203356-9	AEV	A	BLACK									9			12	13	14									23	24	25	26	27	28	29		31			
2-2203356-8	AEU	A	BLACK									9			12	13	14								22	23	24	25	26	27	28	29		31	32	33	
2-2203356-7	AET	A	BLACK												12	13	14									23	24	25	26	27	28	29		31			
2-2203356-6	AES	A	BLACK									9		11	12	13	14	15				19			22	23	24	25	26	27	28	29		31	32	33	
2-2203356-5	AER	A	BLACK																						22		24	25						31	32	33	
2-2203356-4	AEQ	A	BLACK									9													22		24	25						31	32	33	
2-2203356-3	AEP	A	BLACK												12	13	14								22	23	24	25	26	27	28	29		31	32	33	
2-2203356-2	AEO	A	BLACK											11	12	13	14	15				19			22	23	24	25	26	27	28	29		31	32	33	
2-2203356-1	AEN	A	BLACK													13	14								22	23	24	25	26	27	28	29		31	32	33	
2-2203356-0	AEM	A	BLACK									9				13	14								22	23	24	25	26	27	28	29		31	32	33	
1-2203356-9	AEL	A	BLACK																							23											
1-2203356-8	AEK	A	BLACK											11				15				19			22		24	25						31	32	33	
1-2203356-7	AEJ	A	BLACK									9		11		13	14	15				19		21	22	23			26		28	29			32	33	
1-2203356-6	AEI	B	GRAY									9		11		13	14				18				22				26	27	28	29	30	31	32	33	34
1-2203356-5	AEH	B	GRAY									9		11		13	14				18				22		24	25	26	27	28	29	30	31	32	33	34
1-2203356-4	AEG	A	BLACK									9			12			15	16	17	18	19	20	21	22		24	25	26	27	28						
1-2203356-3	AEF	A	BLACK									9			12	13							20						26						32	33	
1-2203356-2	AEE	A	BLACK									9			12										22				26							33	
1-2203356-1	AED	A	BLACK									9			12	13													26							33	
1-2203356-0	AEC	A	BLACK									9			12	13								21					26					31	32	33	
2203356-9	AEB	A	BLACK									9			12			15					20						26						32	33	
2203356-8	AEA	B	GRAY													13									22								30		32	33	34
2203356-7	ADZ	B	GRAY													13																	30		32		34
2203356-6	ADY	B	GRAY													13	14	15	16	17									26					31			
2203356-5	ADX	A	BLACK											11														25		27	28						34
2203356-4	ADW	A	BLACK													13	14	15	16	17									26					31			
2203356-3	ADV	A	BLACK									9		11	12	13	14	15		17		19		21	22		24	25	26	27	28	29		31	32	33	
2203356-2	ADU	A	BLACK									9		11	12	13	14	15		17		19		21			24	25	26	27	28	29		31			
2203356-1	ADT	A	BLACK									9		11	12	13	14			17				21			24	25	26	27	28	29		31			
9-1438842-9	ADS	A	BLACK									9	10	11	12			15				19			22								30		32	33	
9-1438842-8	ADR	A	BLACK										10	11	12																		30				
9-1438842-7	ADQ	A	BLACK											11	12					17							24	25		27				31			
9-1438842-6	ADP	A	BLACK											11	12	13	14							21					26	27	28	29					
9-1438842-5	ADO	A	BLACK									9		11	12	13	14	15				19		21					26	27	28	29					
9-1438842-4	ADN	A	BLACK											11	12	13	14	15				19		21					26	27	28	29					
9-1438842-3	ADM	A	BLACK											11	12	13	14			17				21			24	25	26	27	28	29		31			
9-1438842-2	ADL	A	BLACK									9		11	12	13	14							21					26	27	28	29					
9-1438842-1	ADK	A	BLACK									9	10	11	12			15				19											30				
9-1438842-0	ADJ	A	BLACK										10	11	12			15				19											30				
8-1438842-9	ADI	A	BLACK										10	11	12			15				19			22								30		32	33	
8-1438842-8	ADH	A	BLACK											11	12	13	14	15		17		19		21			24	25	26	27	28	29		31			
8-1438842-7	ADG	A	BLACK									9	10	11	12																		30				
8-1438842-6	ADF	A	BLACK									9	10	11	12	13	14	15		17		19		21	22		24	25	26	27	28	29		31	32	33	
8-1438842-5	ADE	A	BLACK									9	10	11	12	13	14	15		17		19		21			24	25	26	27	28	29		31			
8-1438842-4	ADD	A	BLACK									9	10	11	12	13	14			17				21			24	25	26	27	28	29		31			
8-1438842-3	ADC	A	BLACK									9	10	11	12			15		17		19			22										32	33	
8-1438842-2	ADB	A	BLACK										10	11	12					17																	
8-1438842-1	ADA	A	BLACK										10	11	12					17							24	25		27				31			
8-1438842-0	ACZ	A	BLACK										10	11	12	13	14			17				21					26	27	28	29					
7-1438842-9	ACY	A	BLACK									9	10	11	12	13	14			17				21					26	27	28	29					
7-1438842-8	ACX	A	BLACK									9	10	11	12	13	14	15		17		19		21					26	27	28	29					
7-1438842-7	ACW	A	BLACK										10	11	12	13	14	15		17		19		21					26	27	28	29					
7-1438842-6	ACV	A	BLACK										10	11	12	13	14			17				21			24	25	26	27	28	29		31			
7-1438842-5	ACU	A	BLACK									9	10	11	12			15		17		19															
7-1438842-4	ACT	A	BLACK									9	10	11	12					17																	
7-1438842-3	ACS	A	BLACK									9	10	11	12		14						20	21	22	23				27	28		30	31			
7-1438842-2	ACR	C	NATURAL																				20			23				27			30				
7-1438842-1	ACQ	C	NATURAL																							23							30				
7-1438842-0	ACP	A	BLACK									9	10	11						17												29				33	
6-1438842-9	ACO	A	BLACK									9		11						17												29				33	
6-1438842-8	ACN	A	BLACK									9		11						17				21								29	30	31	32	33	
6-1438842-7	ACM	A	BLACK										10																								
6-1438842-6	ACL	A	BLACK																	17					22							29				33	34

CIRCUITS 1 THRU 8 REMAIN OPEN

BLOCKED CAVITIES INDICATED BY A NUMERIC SYMBOL IN THAT CIRCUIT LOCATION

THIS DRAWING IS A CONTROLLED DOCUMENT.

DIMENSIONS: mm

TOLERANCES UNLESS OTHERWISE SPECIFIED:
0 PLC ±0.5
1 PLC ±0.3
2 PLC ±0.1
3 PLC ±0.1
4 PLC ±0.1
ANGLES ±1°

MATERIAL -
FINISH -

DWN: DL DRUMMOND 19OCT2004
CHK: KL COBLE 19OCT2004
APVD: KL COBLE 19OCT2004

PRODUCT SPEC -
APPLICATION SPEC -
WEIGHT -

TE Connectivity

NAME: CAP ASSEMBLY, 34 WAY, SEALED, HYBRID, MALE

SIZE A0 | CAGE CODE 00779 | DRAWING NO C-1438842 | RESTRICTED TO -

CUSTOMER DRAWING | SCALE 2:1 | SHEET 3 OF 5 | REV A47

4806 (3/13)

THIS DRAWING IS UNPUBLISHED. RELEASED FOR PUBLICATION
© COPYRIGHT 2018 BY - TE CONNECTIVITY ALL RIGHTS RESERVED.

REVISIONS				
P	LTR	DESCRIPTION	DATE	DWN	APVD
	-	SEE SHEET 1	-	-	-

TE P/N	PINOUT ID CODE	INDEX (KEY)	COLOR	1	2	3	4	5	6	7	8	9	10	11	12	13	14	15	16	17	18	19	20	21	22	23	24	25	26	27	28	29	30	31	32	33	34
9-2203356-9	AHN	A	BLACK												12											23										33	34
9-2203356-8	AHM	A	BLACK										10	11	12	13	14	15	16	17	18	19	20	21		23		25	26	27						33	34
9-2203356-7	AHL	A	BLACK											11	12	13				17	18	19	20	21		23			26							33	34
9-2203356-6	AHK	B	GRAY										10		12	13	14						20	21	22	23	24				28	29	30	31	32	33	
9-2203356-5	AHJ	A	BLACK										10	11	12	13	14	15	16	17	18					23		25	26	27						33	34
9-2203356-4	AHI	A	BLACK											11	12	13				17	18					23			26							33	34
9-2203356-3	AHH	A	BLACK												12	13	14							21			24	25		27				31			
9-2203356-2	AHG	B	GRAY									9					14						20	21		23	24	25	26	27	28	29	30	31	32	33	34
9-2203356-1	AHF	B	GRAY														14						20	21		23	24	25	26	27	28	29	30	31	32	33	34
9-2203356-0	AHE	B	GRAY									9		11		13									22						28	29	30	31	32	33	34
8-2203356-9	AHD	A	BLACK														14						20	21		23	24	25	26	27	28	29	30	31	32	33	34
8-2203356-8	AHC	A	BLACK									9					14						20	21		23	24	25	26	27	28	29	30	31	32	33	34
8-2203356-7	AHB	A	BLACK												12	13					18	19							26						32	33	
8-2203356-6	AHA	B	GRAY													13		15	16	17	18	19	20	21	22	23		25	26	27	28	29	30		32	33	
8-2203356-5	AGZ	A	BLACK									9	10	11			14		16	17	18	19	20				24			27		29	30	31			
8-2203356-4	AGY	A	BLACK									9	10	11													24			27		29					
8-2203356-3	AGX	A	BLACK									9			12	13		15		17	18	19	20	21	22		24	25	26		28			31	32	33	
8-2203356-2	AGW	B	GRAY									9					14							21		23	24	25	26	27	28	29	30	31	32	33	34
8-2203356-1	AGV	B	GRAY														14							21		23	24	25	26	27	28	29	30	31	32	33	34
8-2203356-0	AGU	B	GRAY									9		11		13	14							21	22	23	24	25	26	27	28	29	30	31	32	33	34
7-2203356-9	AGT	A	BLACK									9			12	13					18	19							26							33	
7-2203356-8	AGS	A	BLACK									9			12	13					18	19			22				26							33	
7-2203356-7	AGR	A	BLACK												12	13					18	19			22				26							33	
7-2203356-6	AGQ	A	BLACK									9			12						18	19			22				26							33	
7-2203356-5	AGP	A	BLACK									9			12	13		15		17	18	19	20	21				25	26		28			31	32	33	
7-2203356-4	AGO	A	BLACK									9			12	13		15		17	18	19	20	21			24	25	26		28			31	32	33	
7-2203356-3	AGN	A	BLACK									9			12	13		15		17	18	19	20	21	22			25	26		28			31	32	33	
7-2203356-2	AGM	A	BLACK									9			12	13					18	19	20						26						32	33	
7-2203356-1	AGL	A	BLACK												12	13					18	19	20						26						32	33	
7-2203356-0	AGK	B	GRAY									9		11		13	14								22	23	24	25	26	27	28	29	30	31	32	33	34
6-2203356-9	AGJ	B	GRAY									9					14									23	24	25	26	27	28	29	30	31	32	33	34
6-2203356-8	AGI	B	GRAY														14									23	24	25	26	27	28	29	30	31	32	33	34
6-2203356-7	AGH	A	BLACK												12									21													
6-2203356-6	AGG	A	BLACK												12	13	14							21			24	25	26	27	28	29		31			
6-2203356-5	AGF	A	BLACK									9			12									21													
6-2203356-4	AGE	A	BLACK												12	13	14							21		23			26	27	28	29					
6-2203356-3	AGD	A	BLACK									9			12	13	14							21		23			26	27	28	29					
6-2203356-2	AGC	A	BLACK											11	12	13	14	15				19		21			24	25	26	27	28	29		31			
6-2203356-1	AGB	A	BLACK											11	12			15				19		21													
6-2203356-0	AGA	A	BLACK									9		11	12			15				19		21													
5-2203356-9	AFZ	A	BLACK									9												21													
5-2203356-8	AFY	A	BLACK												12												24	25		27				31			
5-2203356-7	AFX	A	BLACK									9		11				15				19		21	22										32	33	
5-2203356-6	AFW	A	BLACK																					21													
5-2203356-5	AFV	A	BLACK									9		11	12	13	14	15				19		21		23			26	27	28	29					
5-2203356-4	AFU	A	BLACK											11	12	13	14	15				19		21		23			26	27	28	29					
5-2203356-3	AFT	A	BLACK									9		11				15				19		21													
5-2203356-2	AFS	A	BLACK									9		11	12	13	14	15				19		21			24	25	26	27	28	29		31			
5-2203356-1	AFR	A	BLACK									9			12	13	14							21			24	25	26	27	28	29		31			
5-2203356-0	AFQ	A	BLACK									9		11	12	13	14	15				19		21	22		24	25	26	27	28	29		31	32	33	
4-2203356-9	AFP	A	BLACK												12						18	19			22				26							33	
4-2203356-8	AFO	A	BLACK												12	13					18	19		21					26					31	32	33	
4-2203356-7	AFN	A	BLACK												12	13					18	19							26							33	
4-2203356-6	AFM	B	GRAY									9	10	11			14		16	17			20	21			24	25					30	31		33	
4-2203356-5	AFL	B	GRAY									9	10	11									20				24						30	31		33	
4-2203356-4	AFK	B	GRAY									9	10	11			14		16	17	18		20	21			24	25	26	27	28	29	30	31		33	
4-2203356-3	AFJ	A	BLACK												12	13		15			18	19							26							33	
4-2203356-2	AFI	A	BLACK											11				15				19			22	23									32	33	
4-2203356-1	AFH	B	GRAY									9	10	11													24						30	31		33	
4-2203356-0	AFG	B	GRAY									9	10	11			14		16	17	18			21			24	25	26	27	28	29	30	31		33	
3-2203356-9	AFF	B	GRAY									9	10	11			14		16	17				21			24	25					30	31		33	
3-2203356-8	AFE	A	BLACK									9		11				15				19			22		24	25						31	32	33	
3-2203356-7	AFD	A	BLACK												12			15			18	19			22				26							33	
3-2203356-6	AFC	A	BLACK												12	13		15			18	19							26						32	33	
3-2203356-5	AFB	A	BLACK												12	13		15			18	19		21					26					31	32	33	
3-2203356-4	AFA	A	BLACK									9		11		13	14	15				19			22	23	24	25	26	27	28	29		31	32	33	
3-2203356-3	AEZ	A	BLACK																						22	23									32	33	
3-2203356-2	AEY	A	BLACK											11		13	14	15				19			22	23	24	25	26	27	28	29		31	32	33	

CIRCUITS 1 THRU 8 REMAIN OPEN

BLOCKED CAVITIES INDICATED BY A NUMERIC SYMBOL IN THAT CIRCUIT LOCATION

THIS DRAWING IS A CONTROLLED DOCUMENT.

DIMENSIONS: mm

TOLERANCES UNLESS OTHERWISE SPECIFIED:
0 PLC ±0.3
1 PLC ±0.3
2 PLC ±0.1
3 PLC ±0.1
4 PLC ±0.1
ANGLES ±1°

MATERIAL -
FINISH -

DWN BL DRUMMOND 30CT2004
CHK RL COBLE 19OCT2004
APVD RL COBLE 19OCT2004

PRODUCT SPEC -
APPLICATION SPEC -
WEIGHT -

TE Connectivity

NAME CAP ASSEMBLY, 34 WAY, SEALED, HYBRID, MALE

SIZE A0 | CAGE CODE 00779 | DRAWING NO C-1438842 | RESTRICTED TO -

CUSTOMER DRAWING | SCALE 2:1 | SHEET 4 OF 5 | REV A47

THIS DRAWING IS UNPUBLISHED. RELEASED FOR PUBLICATION
© COPYRIGHT 2018 BY - TE CONNECTIVITY ALL RIGHTS RESERVED.

REVISIONS					
P	LTR	DESCRIPTION	DATE	DWN	APVD
	-	SEE SHEET 1	-	-	-

CIRCUITS 1 THRU 8 REMAIN OPEN

TE P/N	PINOUT ID CODE	INDEX (KEY)	COLOR	1	2	3	4	5	6	7	8	9	10	11	12	13	14	15	16	17	18	19	20	21	22	23	24	25	26	27	28	29	30	31	32	33	34
2-2318701-0	A1H	B	GRAY									9	10		12	13														27	28	29	30	31	32	33	34
1-2318701-9	A1G	B	GRAY												12	13														27	28	29	30	31	32	33	34
1-2318701-8	A1F	B	GRAY									9	10		12	13																		31	32	33	34
1-2318701-7	A1E	B	GRAY												12	13																		31	32	33	34
1-2318701-6	A1D	A	BLACK									9			12	13					18		20						26						32	33	
1-2318701-5	A1C	A	BLACK									9			12	13					18		20	21					26		28			31	32	33	
1-2318701-4	A1B	B	GRAY									9		11	12		14													27	28	29	30	31	32	33	34
1-2318701-3	A1A	B	GRAY																	17	18						24	25	26	27	28	29	30	31			
1-2318701-2	AHZ	A	BLACK									9							16	17																	
1-2318701-1	AHY	A	BLACK									9							16	17													30	31			
1-2318701-0	AHX	A	BLACK											11	12	13	14										24	25	26								
2318701-9	AHW	A	BLACK																	17							24	25	26	27	28	29					
2318701-8	AHV	B	GRAY									9					14																				
2318701-7	AHU	B	GRAY									9					14													27	28	29	30	31	32	33	34
2318701-6	AHT	A	BLACK																16	17																	
2318701-5	AHS	A	BLACK									9							16	17									26	27	28	29	30	31	32	33	
2318701-4	AHR	A	BLACK																16	17	18	19															
2318701-3	AHQ	A	BLACK												12	13					18		20						26						32	33	
2318701-2	AHP	A	BLACK												12	13					18		20	21					26		28			31	32	33	
2318701-1	AHO	A	BLACK										10		12		14	15	16							23										33	34

BLOCKED CAVITIES INDICATED BY A NUMERIC SYMBOL IN THAT CIRCUIT LOCATION

THIS DRAWING IS A CONTROLLED DOCUMENT.

DIMENSIONS: mm

TOLERANCES UNLESS OTHERWISE SPECIFIED:
0 PLC ±0.3
1 PLC ±0.3
2 PLC ±0.1
3 PLC ±0.1
4 PLC ±0.1
ANGLES ±1°

MATERIAL - -
FINISH - -

DWN: D. DRUMMOND 30CT2004
CHK: J. COBLE 30CT2004
APVD: J. COBLE 30CT2004
PRODUCT SPEC -
APPLICATION SPEC - -
WEIGHT: -
CUSTOMER DRAWING

TE Connectivity

NAME: CAP ASSEMBLY, 34 WAY, SEALED, HYBRID, MALE

SIZE	CAGE CODE	DRAWING NO	RESTRICTED TO
A0	00779	C-1438842	-

SCALE 2:1 SHEET 5 OF 5 REV A47