THIS DRAWING IS UNPUBLISHED. RELEASED FOR PUBLICATION -,- .
© COPYRIGHT - BY TYCO ELECTRONICS CORPORATION. ALL RIGHTS RESERVED.

LOC	DIST
CM	00

REVISIONS

P	LTR	DESCRIPTION	DATE	DWN	APVD
	M	REV PER ECN 0G3B-0401-03	08AUG03	SC	DB

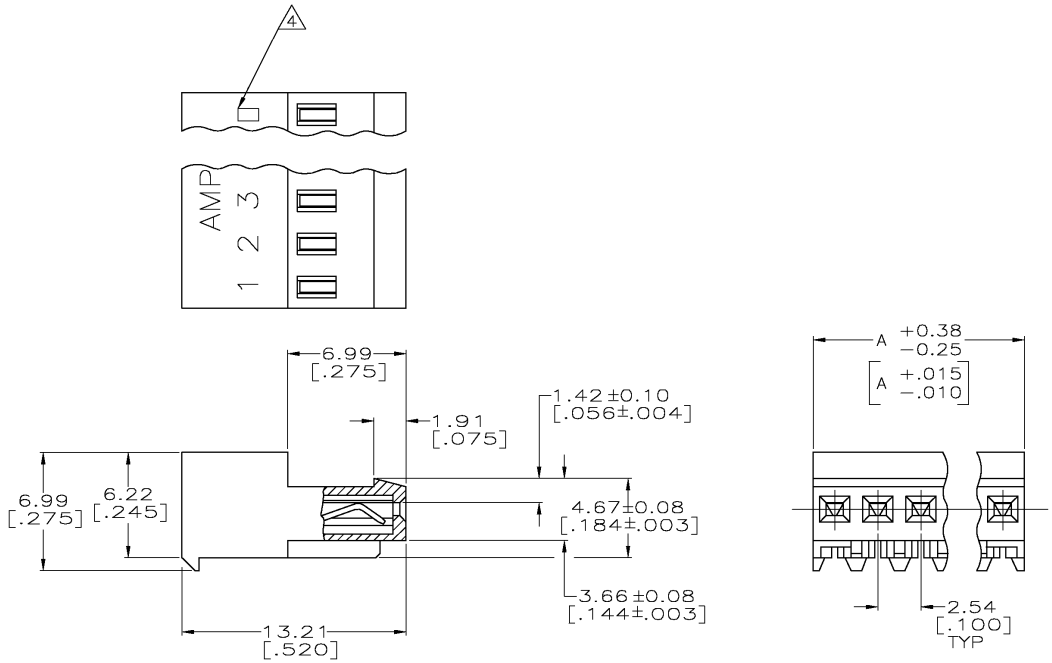

1. MATERIAL: CONNECTOR – NYLON UL94-V2 (BLUE)
   CONTACTS – 0.30[.012] THICK COPPER ALLOY
   (BRIGHT TIN-LEAD 0.00203[.000080] MIN. THICK FOR CONTACTS 641536-2 THRU 1-641536-0).
   (BRIGHT TIN PLATE 0.00305[.000120] MIN. THICK FOR CONTACTS 3-641536-2 AND 3-641536-3).
2. CONTACTS ACCEPT 26 AWG WIRE WITH 1.52[.060] MAX INSULATION DIAMETER.
3. CONTACTS MUST ACCEPT 0.36-0.51[.014-.020] SQUARE OR ROUND POST AND REMAIN LOCKED IN POSITION.
4. IDENTIFICATION NUMBER FOR LAST CIRCUIT MAY NOT APPEAR ON ALL ASSEMBLIES.
5. DIMENSIONS IN BRACKETS ARE IN INCHES.
6. HOUSING FEATURES ARE: CLOSED END WITH LOCKING RAMP & LED CONTACT.

LEADFREE	DIM A	NO. OF CIRCUITS	PART NO.
YES	7.62[.300]	3	3-641536-3
YES	5.08[.200]	2	3-641536-2
NO	25.40[1.000]	10	1-641536-0
NO	12.70[.500]	5	641536-5
NO	7.62[.300]	3	641536-3
NO	5.08[.200]	2	641536-2

THIS DRAWING IS A CONTROLLED DOCUMENT.

DIMENSIONS: INCHES

TOLERANCES UNLESS OTHERWISE SPECIFIED:
0 PLC ±
1 PLC ±
2 PLC ±
3 PLC ± 0.13 [.005]
4 PLC ±
ANGLES ±

MATERIAL 1 FINISH 1

METRIC

DWN S. CARPENTER 08AUG2003
CHK S. CARPENTER 08AUG2003
APVD S. CARPENTER 08AUG2003
PRODUCT SPEC 108-1050
APPLICATION SPEC 114-1019
WEIGHT

Tyco Electronics Corporation
Harrisburg, PA 17105

NAME MTA-100 CONNECTOR ASSEMBLY, 26 AWG,FOR .014 TO .020 POST, SPECIAL

SIZE	CAGE CODE	DRAWING NO	RESTRICTED TO
A2	00779	C-641536	—

CUSTOMER DRAWING SCALE 5:1 SHEET 1 OF 1 REV M

641536

"A/C BUSINESS GROUP" 3323 177-34 LARRY H. SMITH

AMP 1471-9 REV 31MAR2000

2D

H:\DMMod\