REV.	DATE	ECR NO.	DESCRIPTION
NC	10/14/01	–	INITIAL RELEASE
A	03/26/09	100088	ADD TOLERANCES TO MOUNT HOLE DIMENSIONS

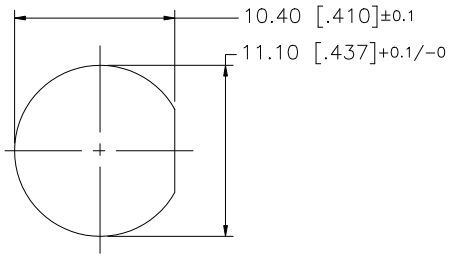

RECOMMENDED
MOUNTING HOLE

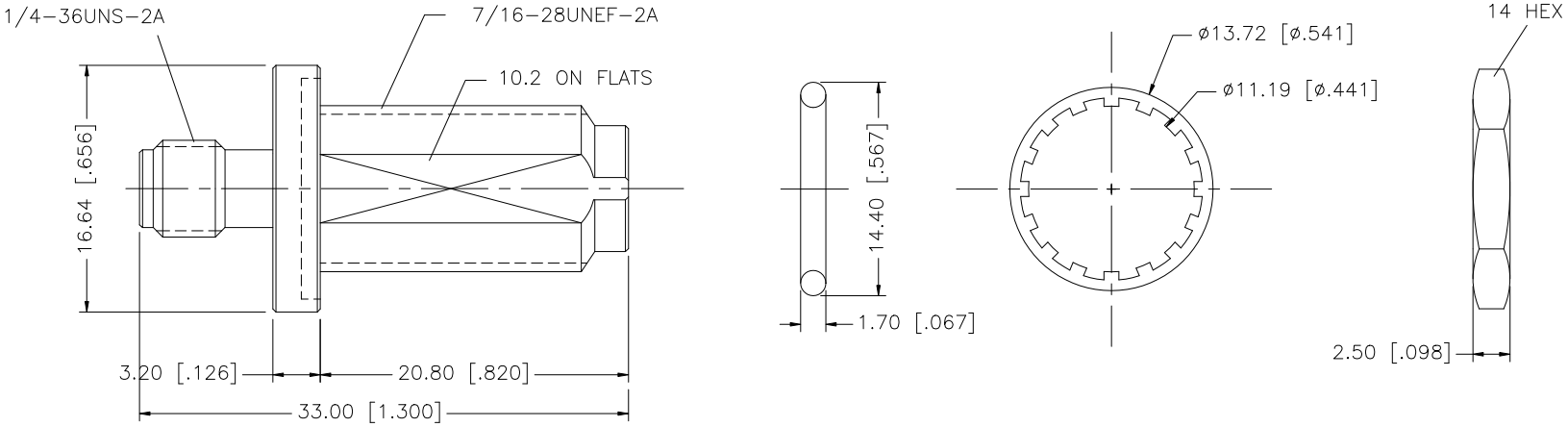

6	HEX NUT	BRASS	NICKEL	1
5	LOCK WASHER	PHOS. BRONZE	NICKEL	1
4	GASKET	SILICONE	RED	1
3	CONTACT PIN	BER. COPPER	GOLD	1
2	INSULATOR	PTFE	NATURAL	1
1	BODY	BRASS	NICKEL	1
	DESCRIPTION	MATERIAL	FINISH	QTY

UNLESS OTHERWISE SPECIFIED DIMENSIONS ARE IN MILLIMETERS. DIMENSIONS IN [ ] ARE IN INCHES AND FOR CUSTOMER REFERANCE ONLY.

UNLESS OTHERWISE SPECIFIED TOLERANCES FOR MILLIMETERS ARE:
0.5 – 8mm ± 0.20mm
8 – 30mm ± 0.40mm
30 – 120mm ± 0.50mm

UNLESS OTHERWISE SPECIFIED TOLERANCES FOR INCHES ARE:
.020 – .315 = ± 0.007"
.315 – 1.180 = ± 0.015"
1.180 – 4.724 = ± 0.020"

DO NOT SCALE DRAWING

APPROVALS		DATE
DRAWN	GRS	03/26/09
CHECKED		
ISSUED		
SHEET	1 OF 1	
CAD FILE	C:/242/242178.DWG	

Amphenol Connex

PART DESCRIPTION
SMA FEMALE TO TNC BULKHEAD
FEMALE ADAPTER

PART NO. 242178

DWG. NO. 242178.DWG | REV. A | SIZE A | SCALE NA