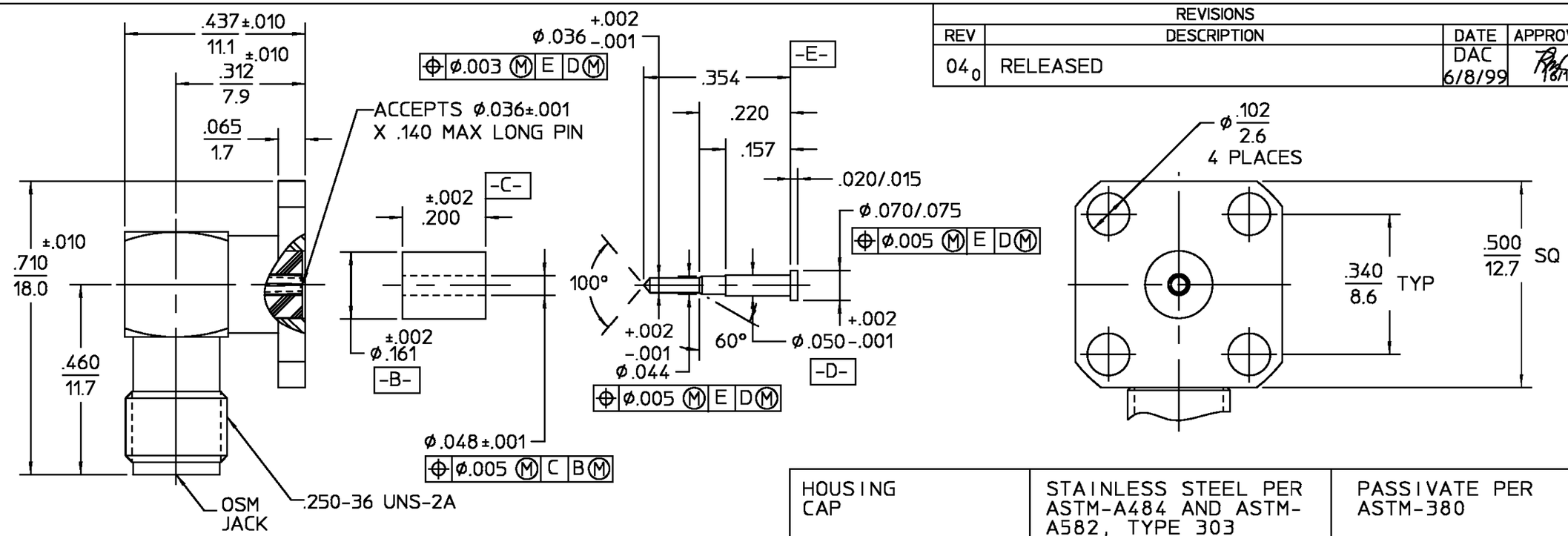

REVISIONS			
REV	DESCRIPTION	DATE	APPROVED
04_0	RELEASED	DAC 6/8/99	18/1/99

ELECTRICAL	MECHANICAL	ENVIRONMENTAL
Nominal Impedance (Ohms) 50	Interface Dimensions MIL-STD-348A,	Temperature Rating -65°C To 125°C
Frequency Range (GHz) DC to 18	Fig. 310.2	Vibration MIL-STD-202, Method
Volt Rating (VRMS MAX)	Recommended Mating	204, Condition D
@ Sea Level 335	Torque 7-10 IN Lbs	Shock MIL-STD-202, Method 213,
VSWR 1.07+.015f GHz	Mating Characteristics:	Condition I
Insertion Loss (dB MAX) .08 $\sqrt{f}$ GHz	Insertion (MAX Lbs) 3.0	Thermal Shock MIL-STD-202,
RF Leakage (dB MIN) -[90-f(GHz)]	Withdrawal (MIN Oz) 1.0	Method 107, Condition B,
Corona, 70,000 Ft (VRMS MIN) 250	Force to Engage and	
Dielectric Withstanding Voltage	Disengage (In Lbs MAX) 2.0	Moisture Resistance MIL-STD-202,
(VRMS MIN) @ Sea Level 1,000	Center Contact Captivation	Method 106, Except Vibration
Contact Resistance (Milliohms MAX)	Axial (Lbs) 6.0 MIN	Shall Be Omitted
Center Contact 3.0	Radial (In Oz) 4.0 MIN	Corrosion - MIL-STD-202, Method
Outer Contact 2.0	Cable Retention	101, Condition B, 5% salt spray
Cable to Housing N/A	Axial Force (Lbs) N/A	
RF High Potential @ Sea Level	Torque (In Oz) N/A	
(VRMS MIN @ 5 MHz) 670	Weight (Grams) 5.0 g max	
I.R.(Megohms MIN) 10,000		

COMPONENT	MATERIAL	FINISH
HOUSING CAP	STAINLESS STEEL PER ASTM-A484 AND ASTM-A582, TYPE 303	PASSIVATE PER ASTM-380
DIELECTRIC	TFE FLUOROCARBON PER ASTM-D-1457	N/A
CENTER CONTACT CONTACT EXT.	BERYLLIUM COPPER PER ASTM B 196 OR ASTM-B-197, ALLOY C17300, CONDITION H	GOLD PLATE PER MIL-G-45204
MALE PIN	BRASS PER ASTM-B-16 HALF HARD	TIN PLATE PER MIL-T-10727

UNLESS OTHERWISE SPECIFIED DIMENSIONS ARE IN INCHES

GEN.TOL. ±.005 ANGLES ± 1°

DRAWN BY DATE 5/3/99
CHECKED BY
APP'D BY 6/10/99

AMP

AMP Incorporated
140 Fourth Avenue
Waltham, MA 02451-7599

These drawings and specifications are the property of AMP Interconnect Div. and shall not be reproduced or copied or used in whole or in part as the basis for the manufacture or sale o f item(s) without written permission.

USE ASS'Y PROCEDURE

NO. A.P. N/A

TITLE OSM FLANGE MOUNT 4 HOLE RIGHT ANGLE JACK RECEPTACLE FIELD REPLACEABLE

SIZE	CODE IDENT NO.		REV
B	26805	2054-5520-02	04_0

SCALE 4:1 SHEET 1 OF 1

CUSTOMER DRAWING

AMP PART # 1361156-1
SHEET 1 OF 1 REV A