10mm X 5000mm RGB LIGHT RIBBON

FEATURES

VOLTAGE: 24V DC
CURRENT: 3.0A
LED VIEWING ANGLE (2 θ 1/2): 100°

STANDARD PACKAGING:
5 METER REEL (300 LED'S)
OPTIONAL PACKAGING:
INDIVIDUAL 500mm SECTIONS (30 LED'S)
ORDER AS ZFS-105000-24RGB/SEC
Note: Individual Sections ARE NOT supplied with insulated wire connections.

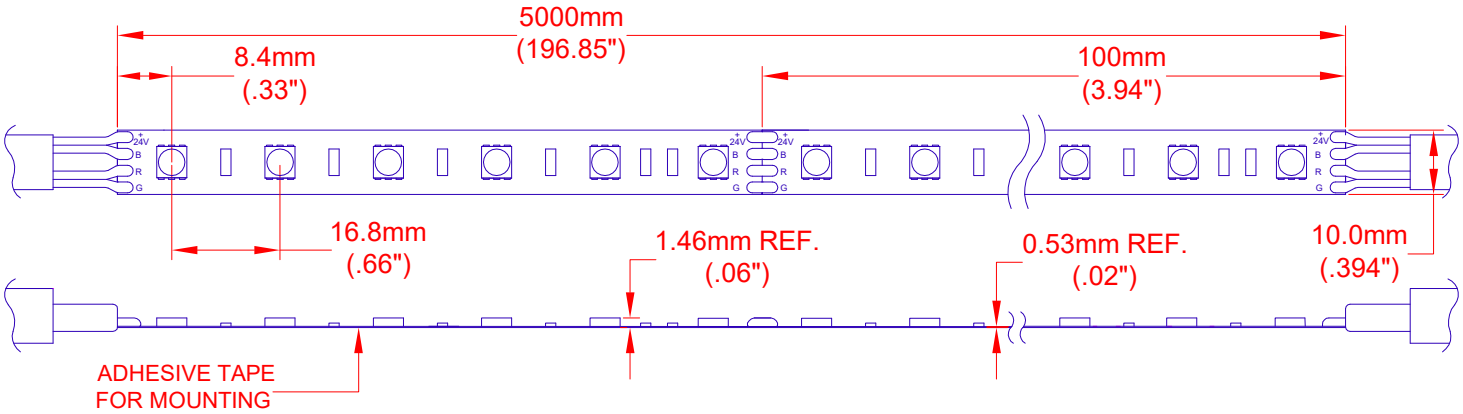

Electrical/Optical Characteristics at TA = 25ºC

Parameter	Symbol	Color	Condition	Min	Typ	Max	Unit
Forward Voltage DC	VF	RGB	IF = 3.0A	- -	24	- -	V
Dominant Wavelength	λD	R	IF = 1.0A	618	630	- -	nm
		G	IF = 1.0A	515	524	- -	
		B	IF = 1.0A	455	470	- -	
Luminous Flux	φV	R	IF = 1.0A	- -	428	- -	lm
		G	IF = 1.0A	- -	1508	- -	
		B	IF = 1.0A	- -	143	- -	
Recommend Forward Current	IF(rec)	- -	- -	- -	2.4	- -	A

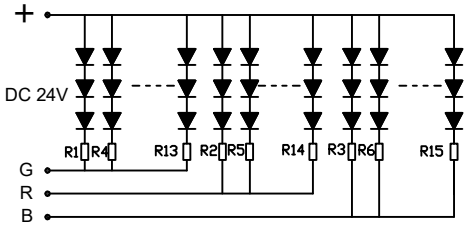

Absolute Maximum Rating at TA = 25ºC

Parameter	Symbol	Absolute Maximum Rating	Unit
Forward Current	IF	3	A
Power Dissipation	PD	72	W
Electrostatic Discharge	ESD	400	V
Operating Temperature	Topr	-20~+50	ºC
Storage Temperature	Tstg	-30~+80	ºC

Mating Components

ZFS-CH0-RGB10J Flex to Flex
No Solder Connector

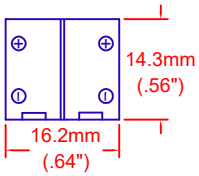

ZCH-170-RGB-J Flex Ribbon Joiner Harness

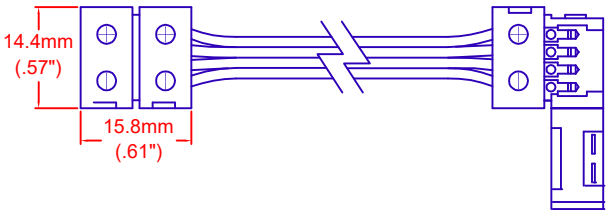

ATTENTION
OBSERVE PRECAUTION
FOR HANDLING ELECTROSTATIC
DISCHARGE SENSITIVE DEVICES

JKL PART NO.: ZFS-105000-24RGB

REV. NO.	DESCRIPTION/ECO NUMBER	APPV'D DATE
B	CHANGE +24V GRB TO +24V BRG [4 PLCS]	6/5/18
A	CHANGE MATING COMPONENT	3/29/16
	RELEASED	3/15/16

METRIC
THIRD ANGLE PROJECTION

DIMENSIONS ARE IN mm (INCHES)
TOLERANCE UNLESS OTHERWISE SPECIFIED
1 PL +/- REF.
2 PL +/- REF.
ANGLE +/-

JKL COMPONENTS CORPORATION

TITLE: 24 V RGB LED FLEX STRIP

DRAWN BY	APPV'D BY	DATE	SIZE	FSCM NO.	DRAWING NO.
L. WENGSTROM	L.R.	6/5/18	A	55335	ZFS-105000-24RGB

- CAD DRAWING -
MANUAL REVISIONS NOT PERMITTED

SCALE	RELEASED DATE	REVISION DATE	REV. NO.	SHEET
NONE	3/15/16	6/5/18	B	1 OF 1