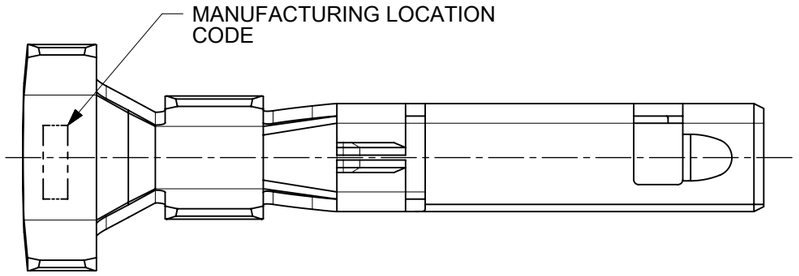

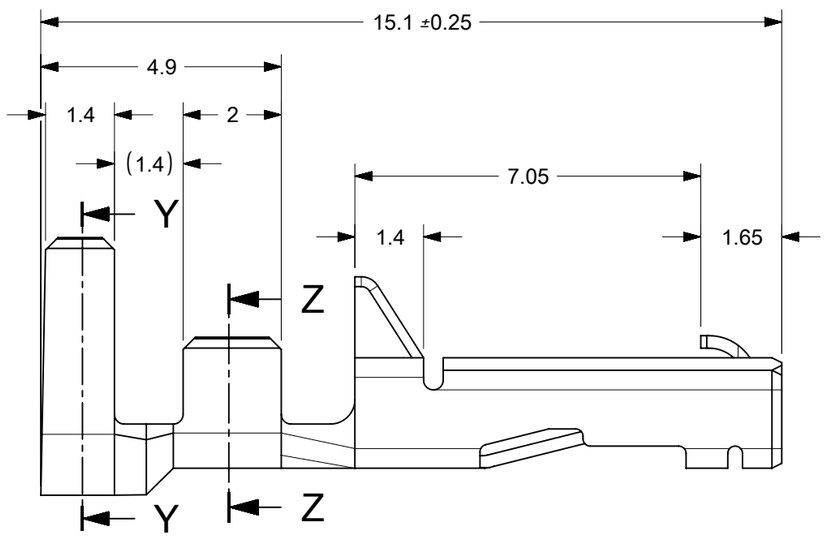

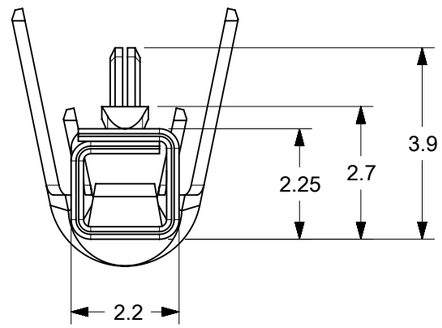

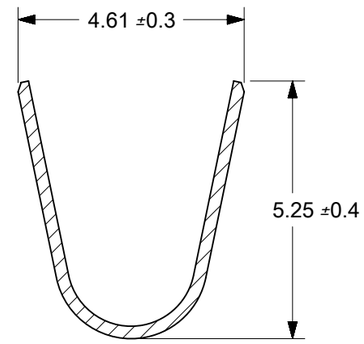

SECTION Y-Y

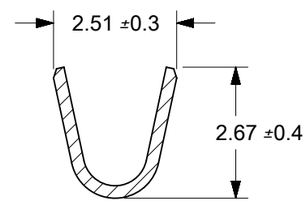

SECTION Z-Z

NOTES:
1. APPLICABLE HOUSING: 51142 AND151207 SERIES
2. MATERIAL: COPPER ALLOY, TIN PLATED(t=0.25)
3. APPLICABLE WIRE RANGE : 16 - 20AWG

ENG. NO.	FORM
50597-8110	LOOSE
50597-8010	CHAIN

THIS DRAWING CONTAINS INFORMATION THAT IS PROPRIETARY TO MOLEX ELECTRONIC TECHNOLOGIES, LLC AND SHOULD NOT BE USED WITHOUT WRITTEN PERMISSION

SYMBOLS: E/A = 0; E/C = 0; E/P = 0; S = 0; ▼ = 0; C = 0; ☒ = 0; ■ = 0; ▽ = 0

DIMENSION UNITS	SCALE
mm	8:1

GENERAL TOLERANCES (UNLESS SPECIFIED)

ANGULAR TOL	±	3.0 °
4 PLACES	±	
3 PLACES	±	
2 PLACES	±	0.2
1 PLACE	±	0.2
0 PLACES	±	

DRAFT WHERE APPLICABLE MUST REMAIN WITHIN DIMENSIONS

CURRENT REV DESC: INITIAL RELEASE

EC NO:	612439	
DRWN:	MUM	2019/02/14
CHK'D:	NCSR	2019/02/26
APPR:	NCSR	2019/02/26

INITIAL REVISION:

DRWN:	MUM	2019/02/14
APPR:	NCSR	2019/02/26

THIRD ANGLE PROJECTION | DRAWING: A3-SIZE | SERIES: 50597

molex

CP65 WTW CONNECTOR
FEMALE TERMINAL AWG 16-20

PRODUCT CUSTOMER DRAWING

DOCUMENT NUMBER	DOC TYPE	DOC PART	REVISION
505978010-SD	PSD	000	A

MATERIAL NUMBER	CUSTOMER	SHEET NUMBER
SEE TABLE	GENERAL MARKET	1 OF 1

DOCUMENT STATUS	P1	RELEASE DATE	2019/02/26 17:00:43

FORMAT: master-8-col-A3
REVISION: H
DATE: 2018/01/16