4DLCD-28320240-IPS Series

4DLCD-28320240-IPS-RTP
4DLCD-28320240-IPS-CTP
4DLCD-28320240-IPS-CLB

Datasheet

Revision 1.5

Copyright © 2023 4D Systems

Content may change at any time. Please refer to the resource centre for latest documentation.

Contents

1. General Specification 3
2. TFT LCD Display Drawing (Non-Touch Version) 5
3. TFT LCD Display Drawing (Resistive Touch Version) 6
4. TFT LCD Display Drawing (Capacitive Touch Version) 7
5. TFT LCD Display Drawing (Cover Lens Bezel) 8
6. Absolute Maximum Ratings 9
7. Electrical Characteristics 9
8. Electro-Optical Characteristics 10
9. Backlight Characteristics 11
10. Interface Descriptions 13
    10.1. LCD Interface 13
    10.2. CTP Interface 15
11. Backlight Example Circuit 16
12. Initialisation Code 17
13. LCD Timing Details 19
    13.1. Timing Chart 19
    13.2. Reset Timing 21
    13.3. Power On Sequence 22
        13.3.1. Case 1 - RES line is held High or Unstable by Host at Power ON 22
        13.3.2. Case 2 - RES line is held Low by Host at Power ON 22
    13.4. Power-off Sequence - Uncontrolled Power Off 22
14. Reliability Test 23
15. Precautions for Using LCD Modules 24
    15.1. Handing Precautions 24
    15.2. Storage Precautions 26
16. Revision History 27

1. General Specification

4DLCD-28320240-IPS is a colour active-matrix LCD module incorporating amorphous silicon TFT IPS (Thin Film Transistor). It is composed of a colour IPSTFT-LCD panel, driver IC, FPC and a backlight unit with/without a Resistive/Capacitive Touch Panel (RTP/CTP). The module display area contains 240 x 320 pixels. This product accords with RoHS environmental criteria.

Part Number Details:

4DLCD 4DLCD LCD Display

28320240 2.8 inches, 240 x 320 Resolution

IPS In-plane Switching

RTP Resistive touch

CTP Capacitive touch

Note

1. RoHS compliant
2. LCD weight tolerance: ± 5%

Specifications

ITEM	CONTENTS	UNIT
LCD Type	TFT / Transmissive / IPS	
Size	2.8	Inch
Viewing Direction	ALL	
Display Mode	Normally Black	
LCD (W x H)	50.00 x 69.20	mm
Active Area (W x H)	43.20 x 57.60	mm
Dot Pitch (W x H)	0.180 x 0.180	mm
Number of Dots (Pixels)	240 (RGB) x 320	
Driver IC	ST7789V	
Backlight Type	4 LEDs	
Surface Luminance: 4DLCD-28320240-IPS	300 (typical)	cd/m2
Surface Luminance: 4DLCD-28320240-IPS-RTP	250 (typical)	
Surface Luminance: 4DLCD-28320240-IPS-CTP	280 (typical)	
Interface Type	MCU-16bit/SPI	
Colour Depth	262K	
Pixel Arrangement	RGB Vertical Stripe	
Surface Treatment	AG	
Input Voltage	2.8 (typical)	V
With/Without TP (Touch Panel)	4DLCD-28320240-IPS - Without Touch Panel	
	4DLCD-28320240-IPS-RTP - With Resistive Touch	
	4DLCD-28320240-IPS-CTP - With Capacitive Touch	
Weight: 4DLCD-28320240-IPS	13.0	g
Weight: 4DLCD-28320240-IPS-RTP	20.0	
Weight: 4DLCD-28320240-IPS-CTP	21.4	

2. TFT LCD Display Drawing (Non-Touch Version)

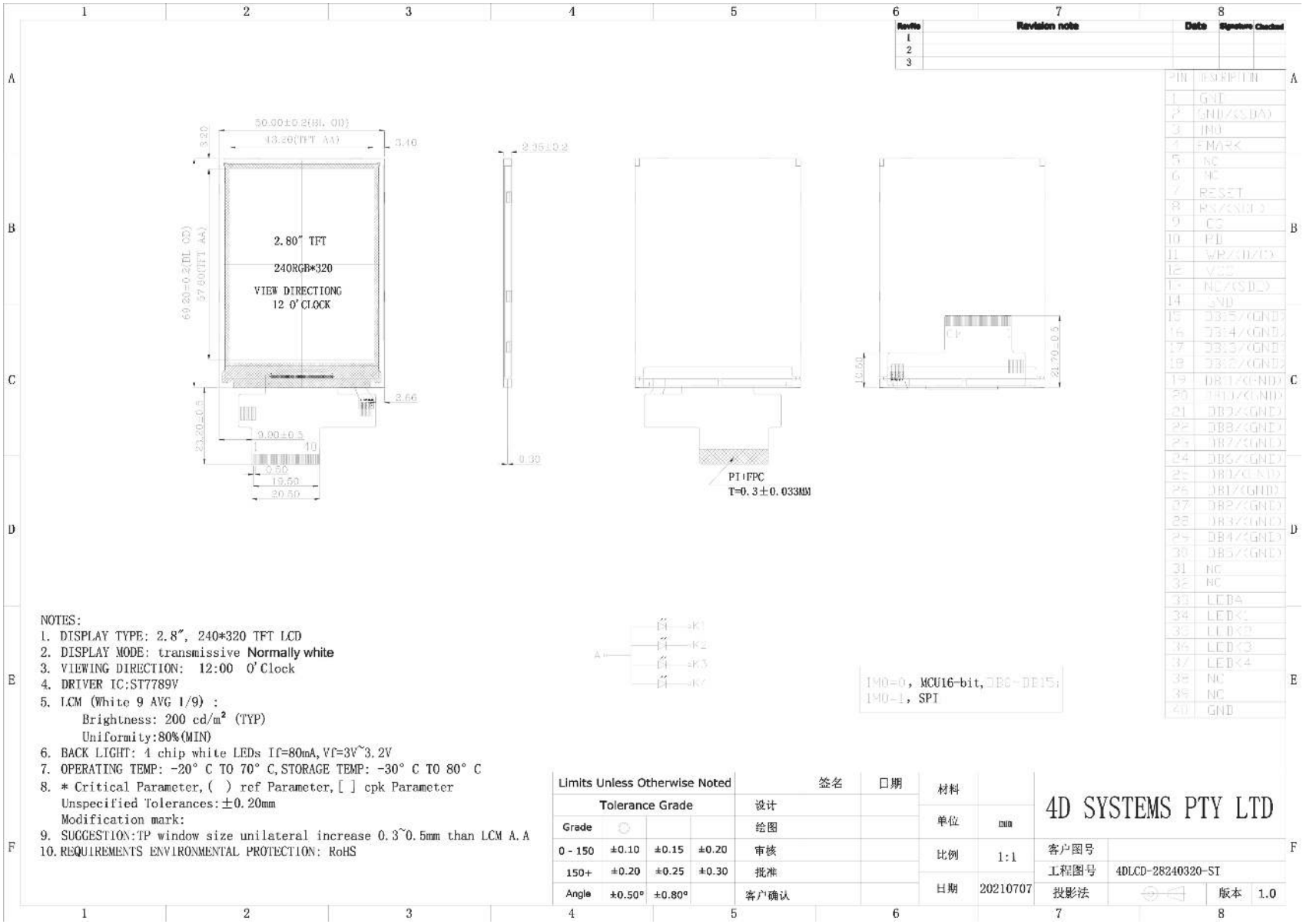

3. TFT LCD Display Drawing (Resistive Touch Version)

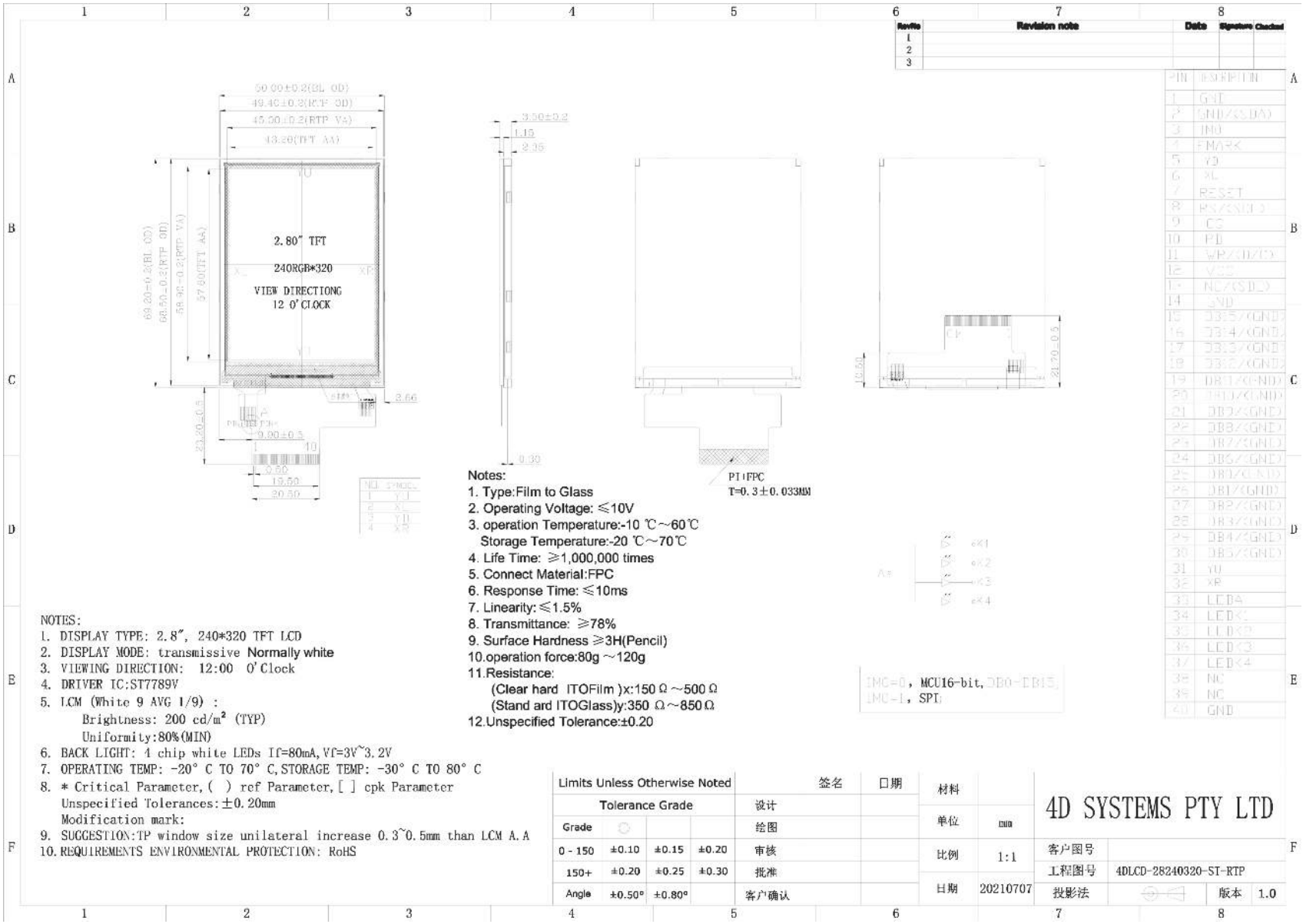

4. TFT LCD Display Drawing (Capacitive Touch Version)

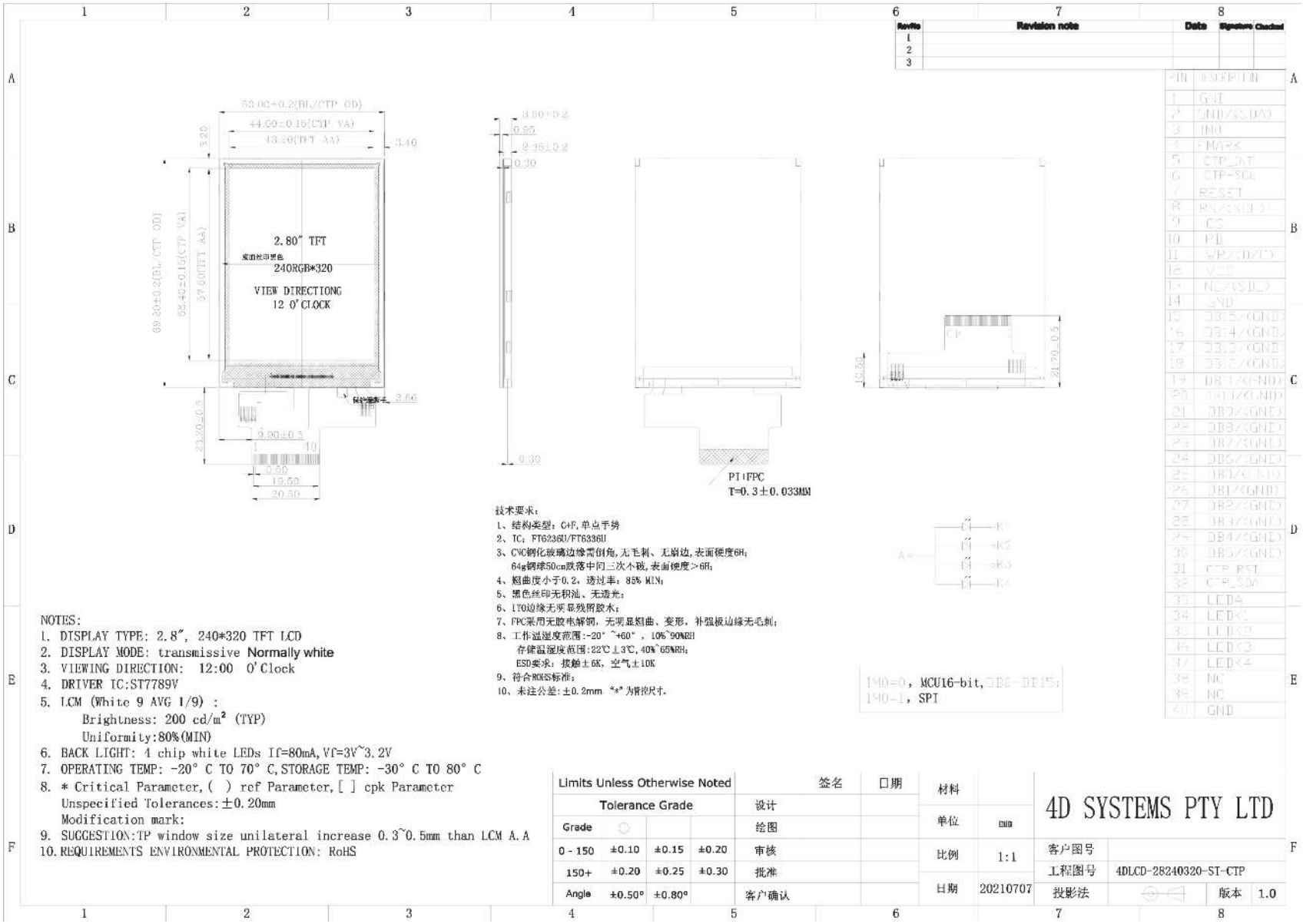

5. TFT LCD Display Drawing (Cover Lens Bezel)

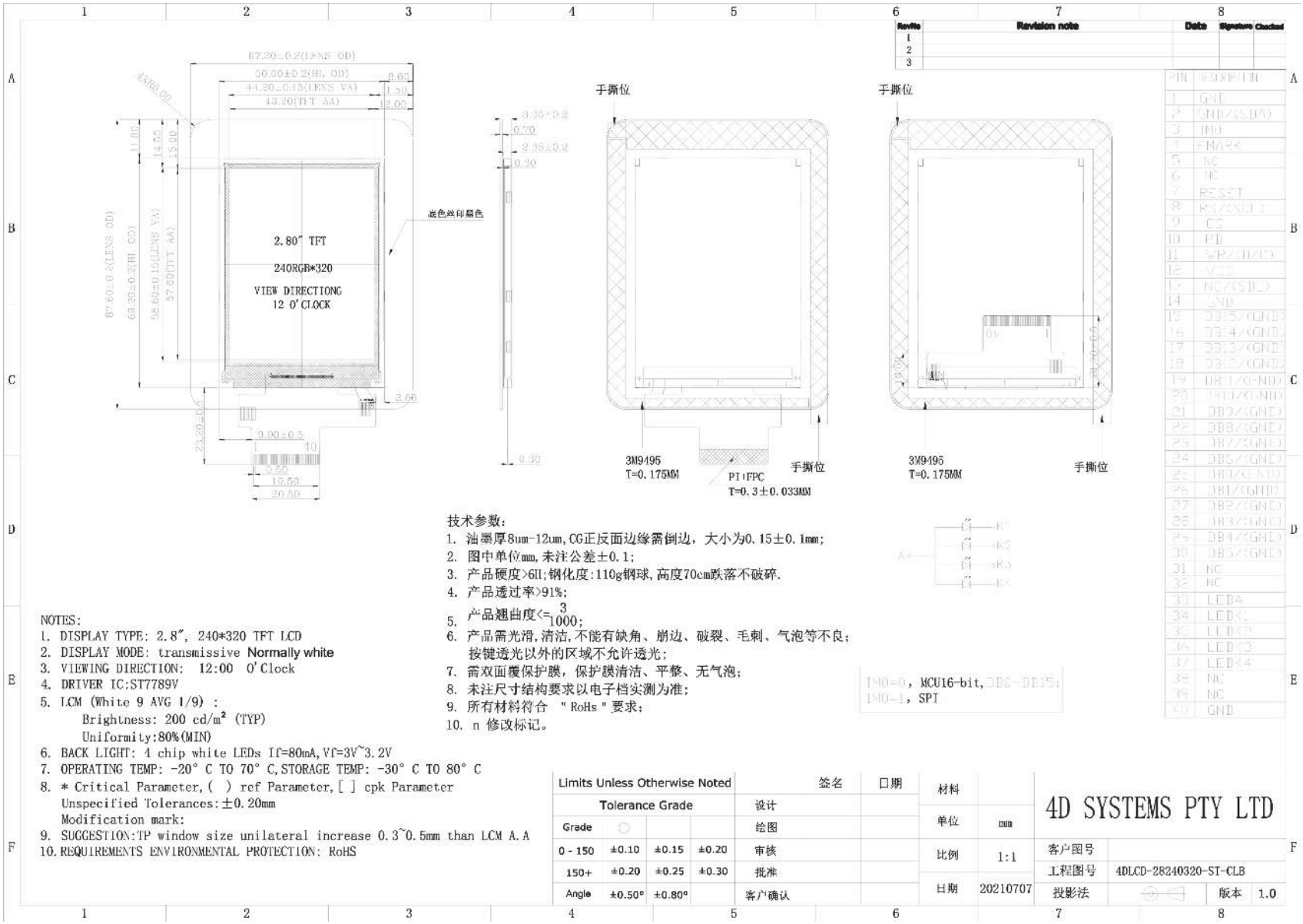

6. Absolute Maximum Ratings

Absolute Maximum Ratings

PARAMETER	SYMBOL	MIN	MAX	UNIT
Supply Voltage for LCD Logic	VDD/VCC	-0.3	4.6	V
Input Voltage for Logic	VIN	VSS-0.5	VDD	V
LED forward current (each LED)	IF	-	25	mA
Operating Temperature	TOP	-20	70	°C
Storage Temperature	TST	-30	80	°C
Humidity	RH	-	90% (Max 60°C)	RH

7. Electrical Characteristics

Electrical Characteristics

PARAMETER	SYMBOL	MIN	TYP	MAX	UNIT
Power Voltage (Logic)	VDD/DCC	2.6	2.8	3.3	V
Input Current (Logic)	IVDD	-	13	-	mA
Input Voltage 'H' Level	VIH	0.7 VDD	-	VDD	V
Input Voltage 'L' Level	VIL	0	-	0.3 VDD	V

8. Electro-Optical Characteristics

Electro-Optical Characteristics

ITEM	SYM	CONDITION	MIN	TYP	MAX	UNIT	REMARK
Response Time	Tr+Tf	θ=0	-	30	-	ms	see figure
Contrast Ratio	Cr	°	-	800	-	-	see figure
Luminance Uniformity	δ WHITE	Ø=0	-	60	-	%	see figure
Surface Luminance	Lv	4DLCD-28320240-IPS	-	300	-	cd/m2	see figure
		4DLCD-28320240-IPS-RTP	-	250	-		
		4DLCD-28320240-IPS-CTP	-	280	-		
Viewing Angle Range	θ	Ø = 90°	-	80	-	deg	see figure
		Ø = 270°	-	80	-	deg	
		Ø = 0°	-	80	-	deg	
		Ø = 180°	-	80	-	deg	
CIE (x,y) Cromacity - Red	x			0.641			
	y			0.337			
CIE (x,y) Cromacity - Green	x	θ=0°		0.274			
	y	Ø=0°	-0.02	0.560	+0.02		see figure
CIE (x,y) Cromacity - Blue	x	Ta=25		0.141			
	y			0.113			
CIE (x,y) Cromacity - White	x			0.308			
	y			0.330			

9. Backlight Characteristics

Backlight Characteristics

PARAMETER	SYMBOL	MIN	TYP	MAX	UNIT
Voltage for LED backlight (Each LED)	Vl	-	3.2	3.4	V
Current for LED backlight (Each LED)	Il-each	-	20	25	mA
Current for LED backlight (Total - 4 LEDS)	Il	-	80	100	mA
LED Lifetime (50% of original brightness)	-	30000	-	-	Hrs

Note

The LED lifetime is defined as the module brightness decreasing to 50% original brightness at Ta=25°C.

1. Contrast Ratio(CR) is defined mathematically as below, for more information see figure.

$$\text{Contrast Ratio} = \frac{\text{Average Surface Luminance with all white pixels (P1, P2, P3, P4, P5)}}{\text{Average Surface Luminance with all black pixels (P1, P2, P3, P4, P5)}}$$

2. Surface luminance is the LCD surface from the surface with all pixels displaying white. For more information, see figure.

$$Lv = \text{Average Surface Luminance with all white pixels (P1, P2, P3, P4, P5)}$$

3. The uniformity in surface luminance δ WHITE is determined by measuring luminance at each test position 1 through 5, and then dividing the maximum luminance of 5 points luminance by the minimum luminance of 5 points luminance. For more information, see figure.

$$\delta\text{WHITE} = \frac{\text{Minimum Surface Luminance with all white pixels (P1, P2, P3, P4, P5)}}{\text{Maximum Surface Luminance with all white pixels (P1, P2, P3, P4, P5)}}$$

4. Response time is the time required for the display to transition from white to black (Rise Time, Tr) and from black to white (Decay Time, Tf). For additional information see Figure 1. The test equipment is the Autronic-Melchers ConoScope series.
5. CIE (x, y) chromaticity, the x and y value is determined by measuring luminance at each test position 1 through 5, and then making the average value.
6. Viewing angle is the angle at which the contrast ratio is greater than 2. For the TFT module, the contrast ratio is greater than 10. The angles are determined for the horizontal or x-axis and the vertical or y-axis to the z-axis which is normal to the LCD surface. For more information, see figure.
7. For viewing angle and response time testing, the testing data is based on the Autronic-Melchers ConoScope series. Instruments for Contrast Ratio, Surface Luminance, Luminance Uniformity, and CIE the test data is based on TOPCONs BM-5 photodetector.

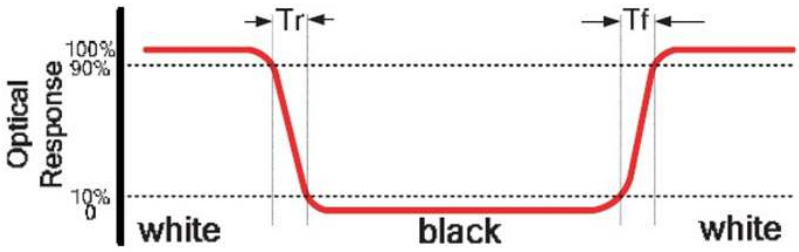

The definition of response time

A : 5 mm
B : 5 mm
H,V : Active Area
Light spot size ∅=5mm, 500mm distance from the LCD surface to detector lens
measurement instrument is TOPCON's luminance meter BM-5

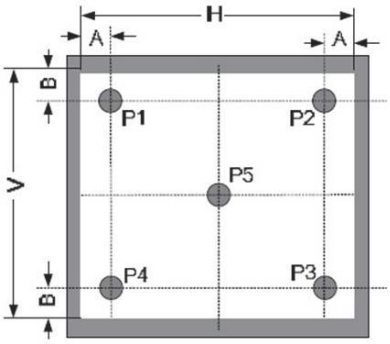

Measuring method for Contrast ratio, surface luminance, Luminance uniformity, CIE (x, y) chromaticity

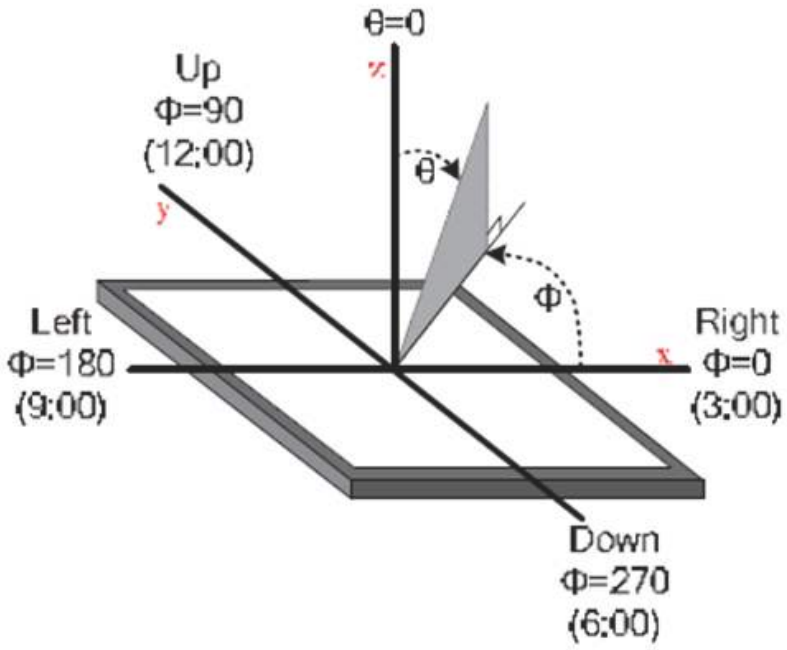

The definition of viewing angle

10. Interface Descriptions

10.1. LCD Interface

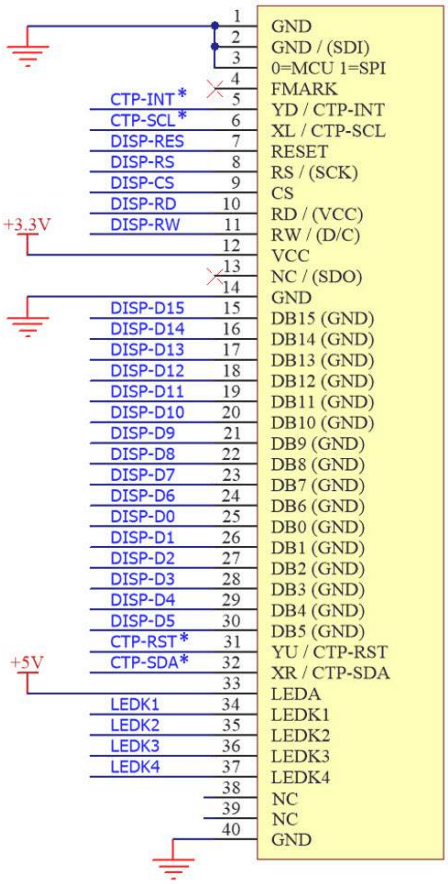

MCU Mode

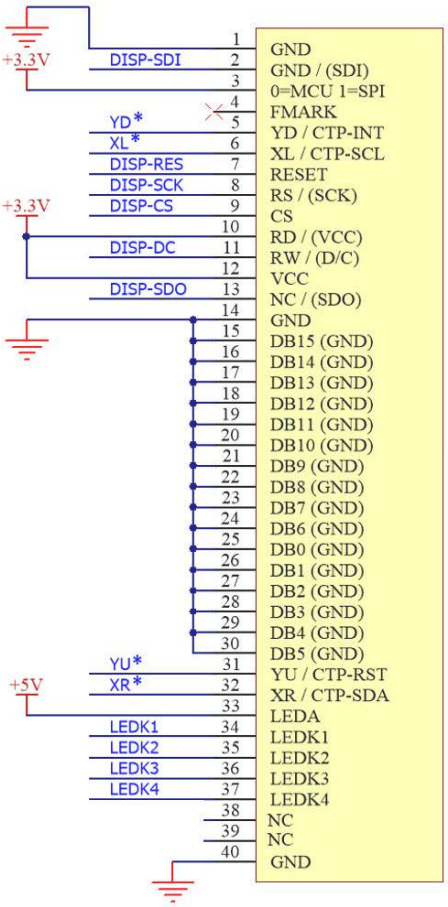

SPI Mode

***** This has no connection (NC) for Non-touch displays.

PIN NO.	SYMBOL	DESCRIPTION	REMARK
1	GND	Ground	
2	GND/(SDI)	Ground for MCU mode/ Serial Data Input signal for SPI mode	
3	MODE	MCU-16bit /SPI mode selection pin	Note 1
4	FMARK	Tearing effect output signal	
5	YD/CTP_INT	The touch panel Y bottom pin for RTP / Interrupt signal from CTP/No Connection (NC) for Non touch Version	Note 3
6	XL/CTP_SCL	The touch panel X left pin for RTP/ I2C SCL for CTP / No Connection (NC) for Non touch Version	Note 3
7	RESET	Reset input signal	

PIN NO.	SYMBOL	DESCRIPTION	REMARK
8	RS/SCL	Instruction Register/Data Register selection pin for MCU mode / SPI Serial Clock for SPI mode	
9	CS	Chip select input pin	
10	RD/(VCC)	Read signal for MCU mode / Tie to VCC for SPI mode	
11	WR/(D/C)	Write signal for MCU mode / Data or Command selection for SPI mode	
12	VCC	Power supply (Logic)	
13	NC/(SDO)	No Connect for MCU mode / Serial Data Output for SPI mode	
14	GND	Ground	
15	DB15/(GND)	Databus DB15 for MCU mode / Tie to GND for SPI mode	Note 2
16	DB14/(GND)	Databus DB14 for MCU mode / Tie to GND for SPI mode	Note 2
17	DB13/(GND)	Databus DB13 for MCU mode / Tie to GND for SPI mode	Note 2
18	DB12/(GND)	Databus DB12 for MCU mode / Tie to GND for SPI mode	Note 2
19	DB11/(GND)	Databus DB11 for MCU mode / Tie to GND for SPI mode	Note 2
20	DB10/(GND)	Databus DB10 for MCU mode / Tie to GND for SPI mode	Note 2
21	DB9/(GND)	Databus DB9 for MCU mode / Tie to GND for SPI mode	Note 2
22	DB8/(GND)	Databus DB8 for MCU mode / Tie to GND for SPI mode	Note 2
23	DB7/(GND)	Databus DB7 for MCU mode / Tie to GND for SPI mode	Note 2
24	DB6/(GND)	Databus DB6 for MCU mode / Tie to GND for SPI mode	Note 2
25	DB0/(GND)	Databus DB0 for MCU mode / Tie to GND for SPI mode	Note 2
26	DB1/(GND)	Databus DB1 for MCU mode / Tie to GND for SPI mode	Note 2
27	DB2/(GND)	Databus DB2 for MCU mode / Tie to GND for SPI mode	Note 2
28	DB3/(GND)	Databus DB3 for MCU mode / Tie to GND for SPI mode	Note 2
29	DB4/(GND)	Databus DB4 for MCU mode / Tie to GND for SPI mode	Note 2
30	DB5/(GND)	Databus DB5 for MCU mode / Tie to GND for SPI mode	Note 2
31	YU/CTP_RST	The touch panel Y up pin for RTP / Reset pin for CTP / No Connection (NC) for Non touch Version	Note 3
32	XR/CTP_SDA	The touch panel X right pin for RTP / I2C SDA Pin for CTP / No Connection (NC) for Non touch Version	Note 3
33	LEDA	Anode of LED Backlight	
34	LEDK1	Cathode1 of LED Backlight	
35	LEDK2	Cathode2 of LED Backlight	

PIN NO.	SYMBOL	DESCRIPTION	REMARK
36	LEDK3	Cathode3 of LED Backlight	
37	LEDK4	Cathode4 of LED Backlight	
38	NC	No Connect	
39	NC	No Connect	
40	GND	Ground	

Note

Recommended LCD connector: 40-way, 0.5 mm pitch FFC connector

1. Interface Mode Selection (pin 3)

Value	Interface	Remark
0	MCU 16bit	Databus: DB0 ~ DB15
1	SPI	4 wire SPI Mode

2. Pins 15 to 30 are grounded on SPI mode.
3. Pins 5,6,31 and 32 are only applicable to touchscreen displays (4DLCD-xxxxxxxx-RTP).

10.2. CTP Interface

The Capacitive Touch is driven by a **Focaltech FT6336** capacitive touch driver IC, which utilizes an I2C interface, and is capable of 1-point touch.

11. Backlight Example Circuit

The backlight circuit can be easily driven off a 5V supply. The voltage needs to be higher than the forward voltage of the LEDs and other drops in the circuit, which can be found in section 9. A 3.3V supply typically does not meet this requirement, so a 5V supply is normally used.

In this circuit, a simple transistor is used to switch each of the LEDs on, where each LED is current-limited through its resistor. The transistor base can be PWM'ed if required (Label BACKLIGHT below), to give dimming control. An example PWM frequency that could be used is 3Khz, however, it is up to the Designer to determine what is suitable for the application.

The resistance feeding each LED can be calculated using Ohms Law, V=I x R.
We want to calculate R, so R=V/I

Supply Voltage = 5V

LED Forward Voltage = 3.2V (see the Interface Descriptions section)

Estimated voltage drop over transistor = 0.3V

Target current per LED = 20mA to 25mA (use 22mA in this example) (See the Interface Descriptions section)

Formula is then R = (5V-3.2V-0.3V) / 0.022A = 68ohms for each LED (LEDK1 to LEDK4)

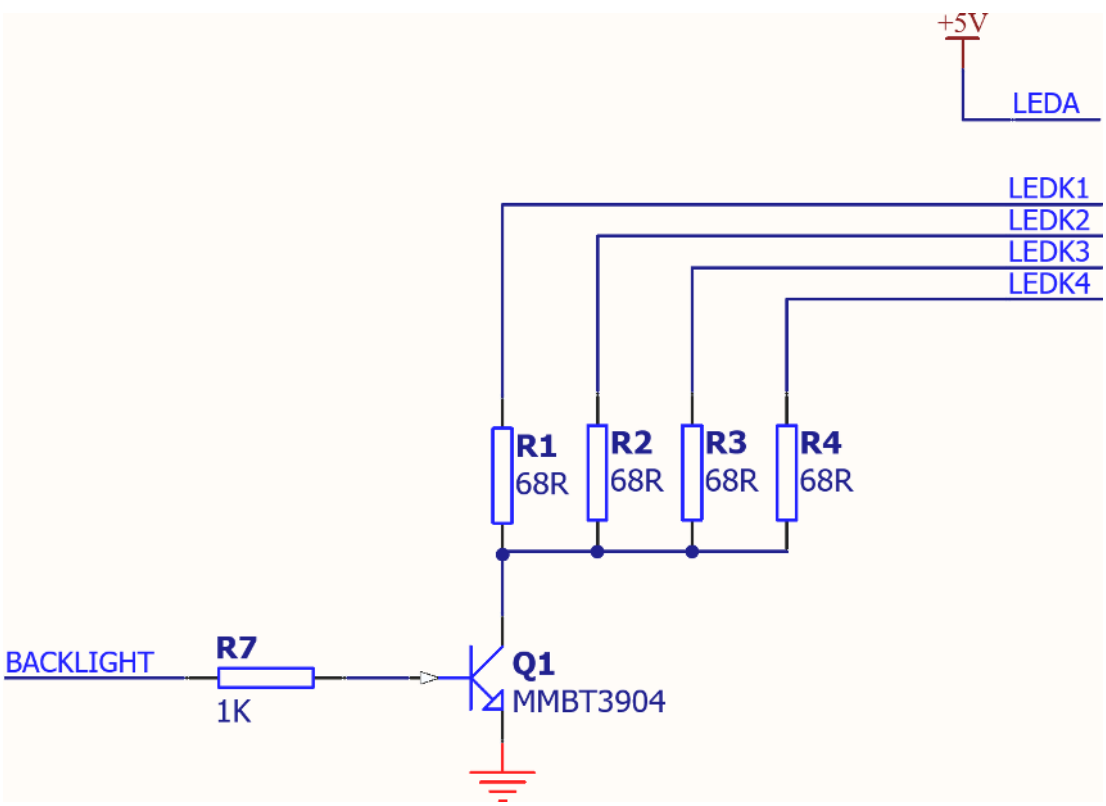

12. Initialisation Code

```
void ST7789V_panelinitialcode(void) {

    // ---------------------------- ST7789V reset sequence ---------------------------- //

    LCD_RESET = 1;
    Delayms(1);     // delay 1ms
    LCD_RESET = 0;
    Delayms(10);    // delay 10ms
    LCD_RESET = 1;
    Delayms(120);   // delay 120ms

    // -------------------------------------------------------------------------------- //

    WriteComm(0x11);
    Delayms(120);   // delay 120ms

    // --------------------------- ST7789V Frame rate setting -------------------------- //

    WriteComm(0xb2);
    WriteData(0x0c);
    WriteData(0x0c);
    WriteData(0x00);
    WriteData(0x33);
    WriteData(0x33);
    WriteComm(0xb7);
    WriteData(0x35);
    WriteComm(0x3a);
    WriteData(0x55);

    // ------------------------------ ST7789V Power setting ---------------------------- //

    WriteComm(0xbb);
    WriteData(0x2b);
    WriteComm(0xc3);
    WriteData(0x17);
    WriteComm(0xc4);
    WriteData(0x20);
    WriteComm(0xc6);
    WriteData(0x0f);
    WriteComm(0xd0);
    WriteData(0xa4);
    WriteData(0xa2);

    // ------------------------------ ST7789V gamma setting ---------------------------- //

    WriteComm(0xe0);
    WriteData(0xf0);
    WriteData(0x00);
    WriteData(0x0a);
    WriteData(0x10);
    WriteData(0x12);
    WriteData(0x1b);
    WriteData(0x39);
    WriteData(0x44);
    WriteData(0x47);
    WriteData(0x28);
```

```
    WriteData(0x12);
    WriteData(0x10);
    WriteData(0x16);
    WriteData(0x1b);
    WriteComm(0xe1);
    WriteData(0xf0);
    WriteData(0x00);
    WriteData(0x0a);
    WriteData(0x10);
    WriteData(0x11);
    WriteData(0x1a);
    WriteData(0x3b);
    WriteData(0x34);
    WriteData(0x4e);
    WriteData(0x3a);
    WriteData(0x17);
    WriteData(0x16);
    WriteData(0x21);
    WriteData(0x22);
    WriteComm(0x21);
    WriteComm(0x29);

}
```

13. LCD Timing Details

13.1. Timing Chart

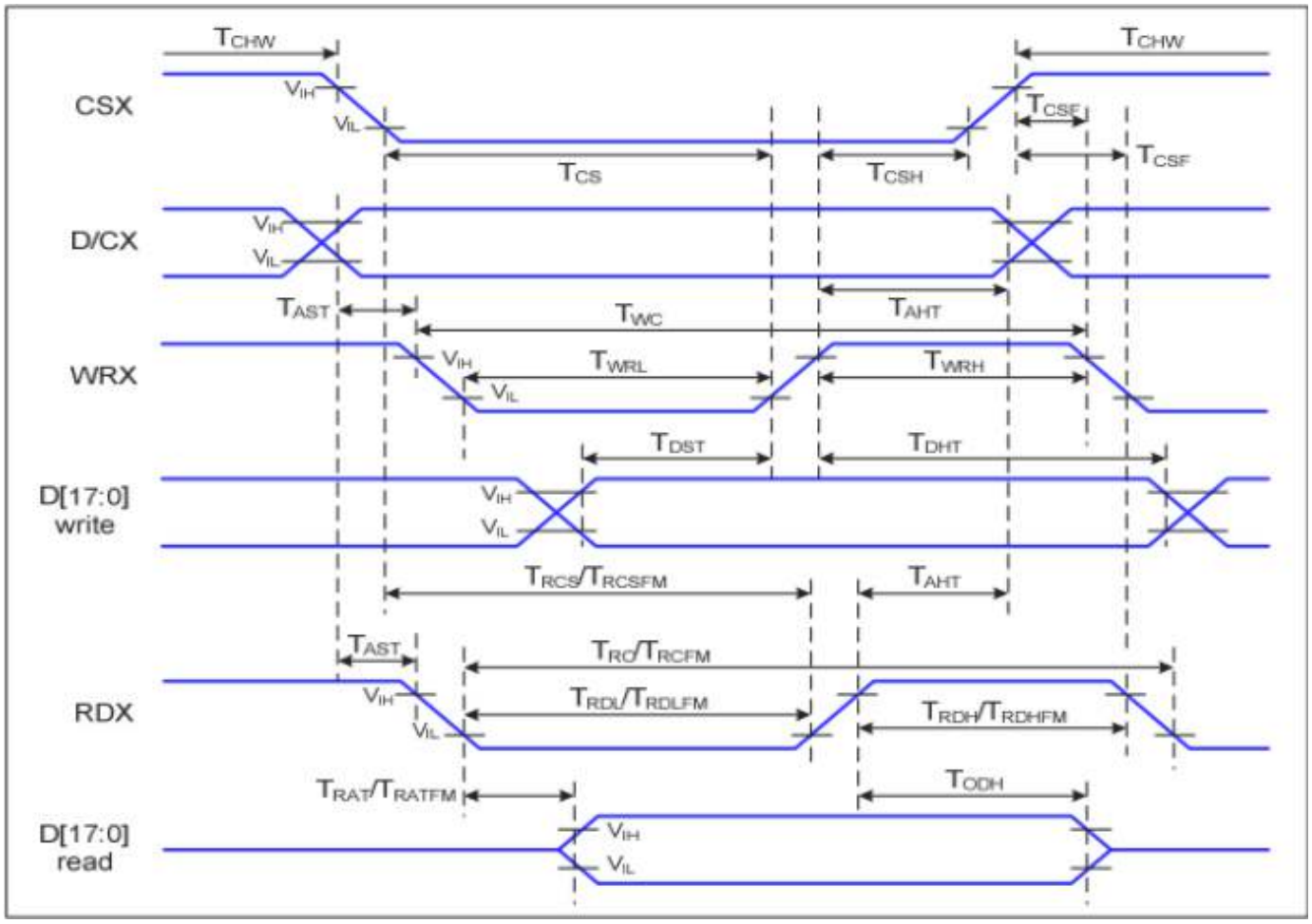

SIGNAL	SYMBOL	PARAMETER	MIN	MAX	UNIT
DCX	tast	Address setup time	0	-	ns
	taht	Address hold time (Write/ Read)	10	-	ns
CSX	tchw	CSX "H" pulse width	0	-	ns
	tcs	Chip Select setup time	15	-	ns
	trcs	Chip Select setup time (Read ID)	45	-	ns
	trcsfm	Chip Select setup time (Read FM)	355	-	ns
	tcsf	Chip Select Wait time (Write/ Read)	10	-	ns
WRX	twc	Write cycle	66	-	ns
	twrh		15	-	ns

SIGNAL	SYMBOL	PARAMETER	MIN	MAX	UNIT
		Write Control Pulse H duration			
	twrl	Write Control Pulse L duration	15	-	ns
RDX(FM)	trcfm	Read cycle (FM)	450	-	ns
	trdhfm	Read Control Pulse H duration (FM)	90	-	ns
	trdlfm	Read Control Pulse L duration (FM)	355	-	ns
RDX(ID)	trc	Read cycle (ID)	160	-	ns
	trdh	Read Control Pulse H duration	90	-	ns
	trdl	Read Control Pulse L duration	45	-	ns
D[17:0]	tdst	Write data setup time	10	-	ns
	tdht	Write data hold time	10	-	ns
	trat	Read access time	-	40	ns
	Tratfm	Read access time	-	340	ns
	trod	Read output disable time	20	80	ns

Note

Timing parameter (VDD=3.3V, GND=0V, Ta=25˚C)

13.2. Reset Timing

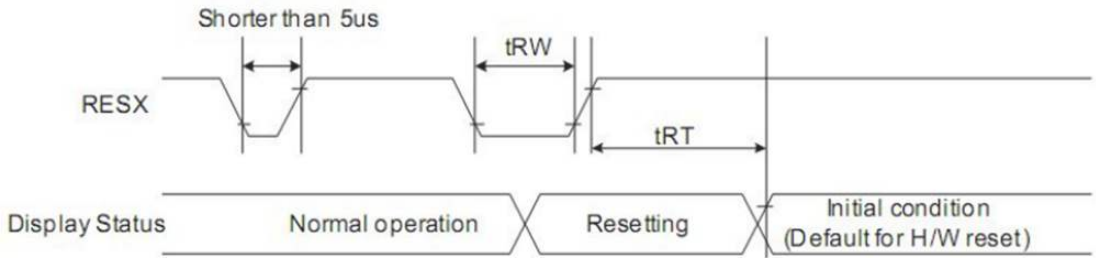

SIGNAL	SYMBOL	PARAMETER	MIN	MAX	UNIT
RESET	tRW	Reset low pulse width	10	-	us
	tRT	Reset complete time	-	5 (note1)	ms
			-	120 (note2)	ms

Note

1. When reset is applied during SLPIN mode.
2. When reset applied during SLPOUT mode.

13.3. Power On Sequence

13.3.1. Case 1 - RES line is held High or Unstable by Host at Power ON

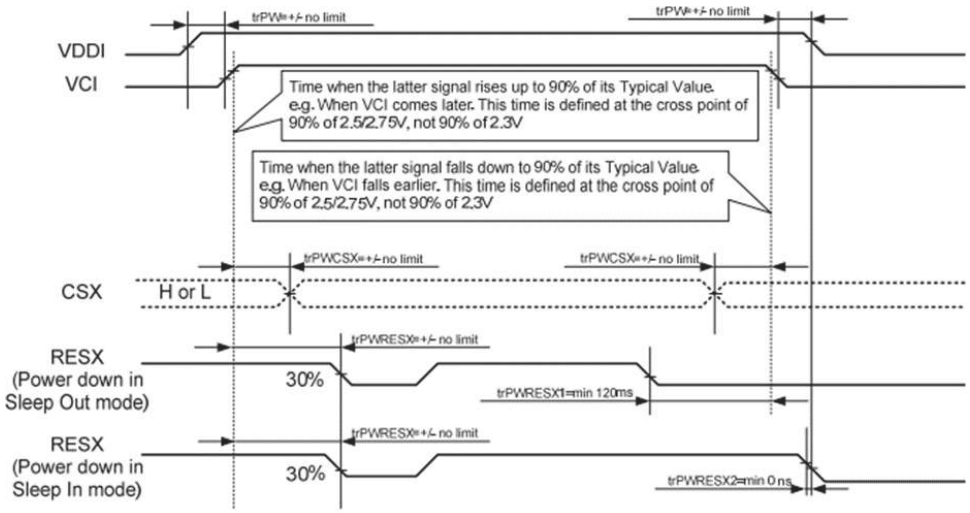

trPWRESX1 is applied to RESX falling in the Sleep Out Mode
trPWRESX2 is applied to RESX falling in the Sleep In Mode

13.3.2. Case 2 - RES line is held Low by Host at Power ON

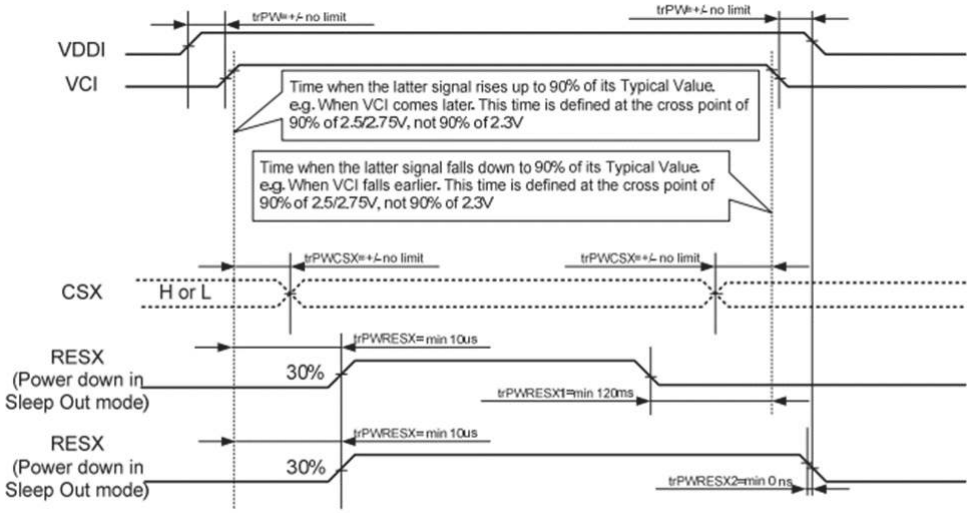

trPWRESX1 is applied to RESX falling in the Sleep Out Mode
trPWRESX2 is applied to RESX falling in the Sleep In Mode

13.4. Power-off Sequence - Uncontrolled Power Off

Uncontrolled power off is a situation where power is removed unexpectedly, e.g. a battery powering a device is disconnected without using the controlled power off sequence. There will not be any damage to the display module, nor will the display module cause any damage to the host. During an uncontrolled power-off event, ILI9341V will force the display to blank its content and there will not be any further abnormal visible effects on the display after 1 second of the power being removed. The display will remain blank until the Power On Sequence occurs.

14. Reliability Test

Reliability Test

No.	SYMBOL	TEST CONDITION	REMARK
1	High Temperature Storage	80℃±2℃ 96H Restore 2H at 25℃ Power off	
2	Low Temperature Storage	-30℃±2℃ 96H Restore 2H at 25℃ Power off	
3	High Temperature Operation	70℃±2℃ 96H Power on	
4	Low Temperature Operation	-20℃±2℃ 96H Power on	
5	High Temperature & Humidity Operation	60℃±2℃ 90%RH 96H Power on	After test cosmetic and electrical defects should not happen.
6	Temperature Cycle	-20℃←→25℃←→70℃ 30min 5min 30min After 10 cycles, restore 2H at 25℃ Power off	
7	Vibration Test	10Hz~150Hz, 100m/s^2, 120min	
8	Shock Test	Half-sinewave, 300m/s^2, 11ms	

Note

The Displays are of the highest rated 'Grade A', which allows for 0-4 defective pixels. A defective pixel could be solid Black (Dead), White, Red, Green or Blue.

15. Precautions for Using LCD Modules

15.1. Handing Precautions

- The display panel is made of glass and a polarizer. The glass is fragile. It tends to be chipped during handling, especially on the edges. Please avoid dropping or jarring. Please be careful not subject it to a mechanical shock by dropping it on impact.
- If the display panel is damaged and the liquid crystal substance leaks out, be sure not to get any of it in your mouth. If the substance contacts your skin or clothes, wash it off using soap and water.
- Do not apply excessive force to the display surface or the adjoining areas since this may cause the color tone to vary. Do not touch the display with bare hands. This will stain the display area and degrade insulation between terminals (some cosmetics are determined by the polarizer).
- The polarizer covering the display surface of the LCD module is soft and easily scratched. Handle this polarizer carefully. Do not touch, push or rub the exposed polarizer with anything harder than an HB pencil lead (e.g., glass, tweezers, etc.). Do not put or attach anything to the display area to avoid leaving marks on it. Condensation on the surface and contact with terminals due to cold temperatures will damage, stain or contaminate the polarizer. After products are tested at low temperatures they must be warmed up in a container before coming into contact with room-temperature air.
- If the display surface becomes contaminated, breathe on the surface and gently wipe it with a soft dry cloth. If it is heavily contaminated, moisten the cloth with one of the following solvents
    - Isopropyl alcohol
    - Ethyl alcohol Do not scrub hard as it might damage the display surface.
- Solvents other than those mentioned above may damage the polarizer. Especially the following.
    - Water
    - Ketone
    - Aromatic solvents Wipe off saliva or water drops immediately, contact with water over a long period may cause deformation or color fading. Avoid contact with oil and fat.
- Take necessary precautions to minimize corrosion of the electrode. Corrosion of the electrodes is accelerated by water droplets, moisture condensation or current flow in a high-humidity environment.
- Install the LCD Module by using the mounting holes. When mounting the LCD module, make sure it is free of twisting, warping and distortion. In particular, do not forcibly pull or bend the I/O cable or the backlight cable.
- Do not attempt to disassemble or process the LCD module.
- NC terminal should be open. Do not connect anything to it.
- If the logic circuit power is off, do not apply input signals.

- Control Electro-Static Discharge. Since this module uses a CMOS LSI, the same careful attention should be paid to electrostatic discharge as for an ordinary CMOS IC. To prevent the destruction of the elements by static electricity, ensure that an optimum work environment is maintained.
    - Before removing the LCM from its packing case or incorporating it into a set, be sure that the module and your body have the same electric potential. Be sure to ground your body when handling the LCD modules.
    - To reduce the amount of static electricity generated, do not conduct assembly and other work under dry conditions. To reduce the generation of static electricity, please ensure that the air in the work environment is not too dry. Relative humidity of 50%-60% is recommended. As much as possible, make the electric potential of your work clothes and that of the workbench the ground potential.
    - The LCD module is coated with a film to protect the display surface. Be careful when peeling off this protective film since static electricity may be generated.
- Since the LCM has been assembled and adjusted with a high degree of precision, avoid applying excessive shocks to the module or making any alterations or modifications to it.
    - Do not alter, modify or change the shape of the tab on the metal frame.
    - Do not make extra holes on the printed circuit board, modify its shape or change the positions of the components to be attached.
    - Do not damage or modify the pattern writing on the printed circuit board.
    - Do not modify the zebra rubber strip (conductive rubber) or heat seal connector.
    - Do not drop, bend or twist the LCM.

15.2. Storage Precautions

When storing the LCD modules, the following precautions are necessary.

- Store them in a sealed polyethylene bag. If properly sealed, there is no need for the desiccant.
- Store them in a dark place. Do not expose to sunlight or fluorescent light, keep the temperature between 0℃ and 35℃, and keep the relative humidity between 40%RH and 60%RH.
- The polarizer surface should not come in contact with any other objects. (We advise you to store them in an anti-static electricity container in which they were shipped. Some Liquid crystals solidify under low temperatures (below the storage temperature range) leading to defective orientation or the generation of air bubbles (black or white). Air bubbles may also be generated if the module is subjected to low temperatures.
- If the LCD modules have been operating for a long time showing the same display patterns, the display patterns may remain on the screen as ghost images and a slight contrast irregularity may also appear. A normal operating status can be regained by suspending use for some time. It should be noted that this phenomenon does not adversely affect performance reliability.
- To minimize the performance degradation of the LCD modules resulting from the destruction caused by static electricity etc., please avoid holding the following sections when handling the modules'
    - The exposed area of the printed circuit board
    - Terminal electrode sections

16. Revision History

Document Revision

REVISION	DATE	COMMENT
1.0	01/07/2019	Initial Version
1.1	28/08/2020	Minor Updates / Fixes
1.2	14/06/2021	Minor Updates
1.3	24/06/2021	Added logic current consumption data, added backlight circuit example
1.4	09/02/2022	Chnged to ST7789V Driver IC Change
1.5	20/01/2023	Modified datasheet for web-based documentation