This document is the property of Amphenol Corporation and is delivered on the express condition that it is not to be disclosed, reproduced or used, in whole or in part, for manufacture or sale by anyone other than Amphenol Corporation without its prior concert, & that no right is granted to disclose or to use any information in this document.

Customer Drawing

REVISIONS				
SYM	ECN	DESCRIPTION	DATE	APPROVED
1	HK--	First Release Drawing	09/10/13	IP
2	HK--	Update the Drawing	04/14/16	IP

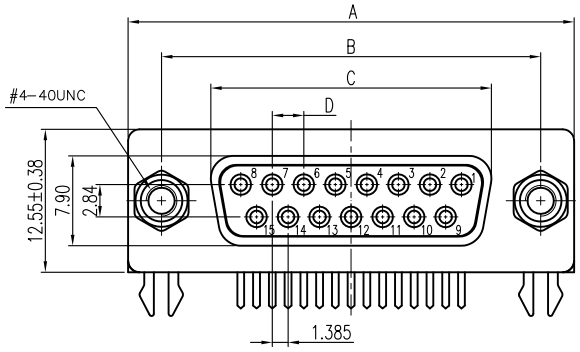

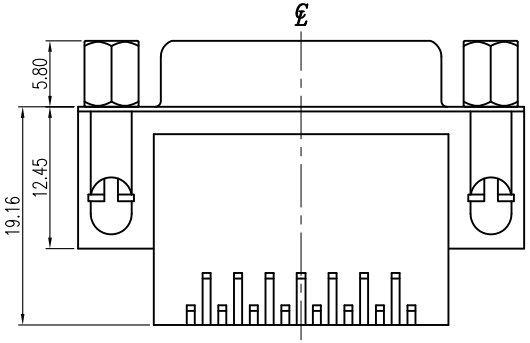

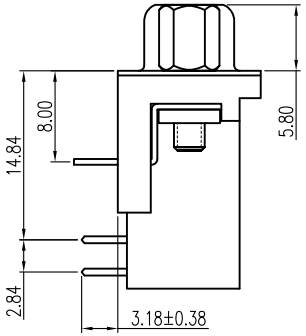

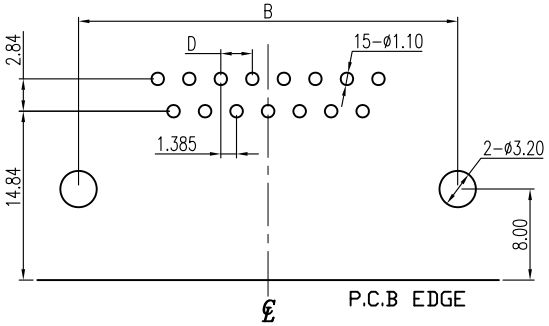

RECOMMENDED P.C.B LAYOUT

TOLERANCE: ±0.05mm

NO.	A ±0.38	B ±0.25	C ±0.13	D ±0.13
9S	30.81	24.99	16.33	2.77
15S	39.19	33.32	24.66	2.77
25S	53.04	47.04	38.38	2.77
37S	69.32	63.50	54.84	2.77

D-SUB TECHNICAL DATA

SHELL : SPCC, 100u" Tin over 50u" min nickel over 50u" min Copper
BODY : PBT, UL 94V-0, Color:Black.
CONTACTS : Copper Alloy.
Gold flash over 50u" min nickel on mating area.
100u" min tin over 50u" min nickel on solder area
BOARDLOCK : Copper Alloy, Tin Plated.
SCREWLOCK : Copper Alloy, Nickel Plated.
RIVET : Copper Alloy. Nickel Plated.
ELECTRICAL : Voltage rating: 250 VAC(RMS) Max
Current rating: 3A
Withstanding Voltage >1000 VAC(RMS)
Insulation resistance >1000 M Ohms
Contact resistance 25 mOhms max.
MARKING : Amphenol-...(Series No.)
Commercial reference
Manufacturing date

PRODUCT CODE

L 77 SD X XX S AB CH 4F

- RoHS Compliance
- 77: tinned shell for receptacle
- Shell size: E, A, B, C
- Configuration: 09, 15, 25, 37
- Contact type: S=Socket
- AB: Footprint 14.84mm
- PCB locking type: Grounding tabs + boardlocks
- Mounting options: 4F = front screwlock #4-40

UNLESS OTHERWISE SPECIFIED TOLERANCES	U.S.	METRIC
.X +/-		0.50
.XX +/-		0.30
.XXX +/-		0.20
FRACTIONS +/-		
ANGLES +/-		5°

FOR MATERIALS AND FINISHES SEE NOTES
REMOVE SHARP EDGES
DIMENSIONS: U.S. INCHES; METRIC MM

APPROVAL		DATE
DRAWN	Felix.Liu	04/14/16
CHECKED	Tony.Tang	04/14/16
CHECKED		

DRAWING FILE :

ANGLE OF PROJECTION

Amphenol

TITLE: Stamped and formed contact,SD Series

SIZE	DRAWING NO.	REV.
A4	L77SDXXXSABCH4F	2

SCALE NONE SHEET 1 OF 1