REVISIONS			
LTR	DESCRIPTION	DATE	APPROVED
N/C	INITIAL RELEASE PER ECN#T-6850	6/7/86	M Higgy
A	REVISED PER DCR# T-22774	12/15/99	M.HIGGY

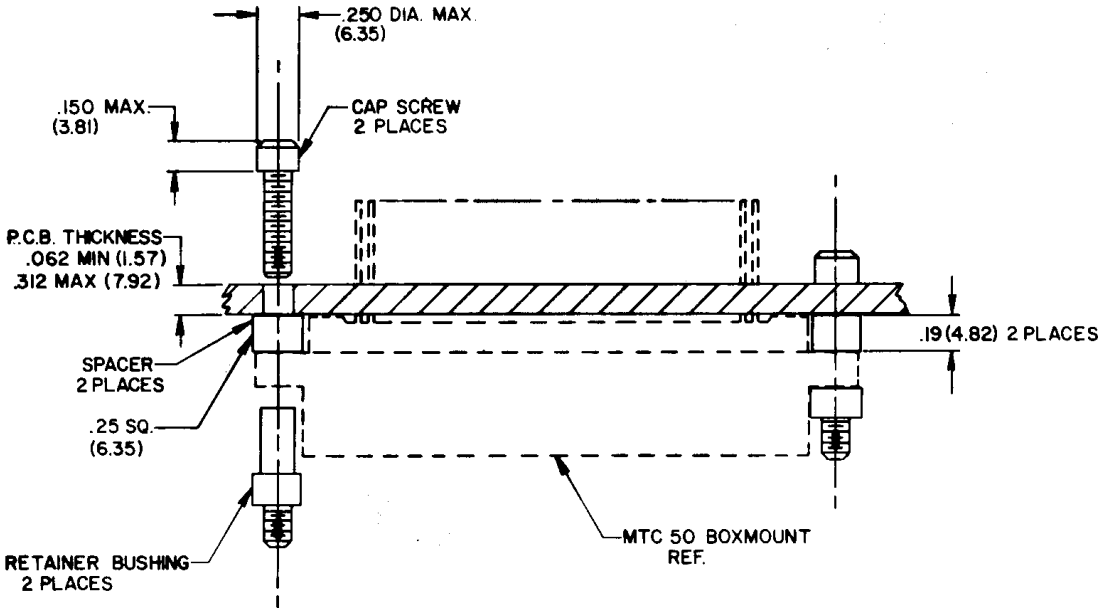

NOTES

1. THIS HARDWARE KIT IS USED TO MOUNT THE MTC 50 BOXMOUNT TO A PRINTED CIRCUIT BOARD.

2. ITEMS ARE SHIPPED UNASSEMBLED IN A PLASTIC BAG.

3. FINISH:
   - A. RETAINER BUSHING — CADMIUM PLATED PER QQ-P-416
   - B. CAP SCREW — CADMIUM PLATED PER QQ-P-416

4. MATERIAL:
   - A. RETAINER BUSHING — SS 300 SERIES PER QQ-S-763
   - B. CAP SCREW — SS 300 SERIES PER QQ-S-763
   - C. SPACER — NYLON

5. TOLERANCE: ± UNLESS OTHERWISE SPECIFIED
   .XX = .02 (.51)

SPECIFICATION CONTROL DRAWING © Raychem Corporation 1982

DRAWN	LUTTICKEN	7-29-86
CHECKED		7/31/86
APPROVED	M. Higgy	7/31/86
APPROVED		

UNLESS OTHERWISE SPECIFIED DIMENSIONS ARE IN INCHES. METRIC DIMENSIONS ARE IN PARENTHESIS

DO NOT SCALE THIS DRAWING

Raychem
RAYCHEM CORPORATION
300 CONSTITUTION DRIVE
MENLO PARK, CALIFORNIA 94025

TITLE
P.C. BOARD MOUNTING KIT FOR MTC 50, BOXMOUNT CONNECTORS

SIZE	CODE IDENT NO.	DWG NO	
C	06090	CHA-0047-003	A
		WEIGHT ——	SHEET 1 OF 1

If this document is printed it becomes uncontrolled.
Check with the web for latest revision.